Main [OB1]

Main Properties							
General							
Name	Main	**Number**	1	**Type**	OB	**Language**	LAD
Numbering	Manual						
Information							
Title	"Main Program Sweep (Cycle)"	**Author**		**Comment**	This is program that combines the ladder programming language with a stateflow machine. Each state describes as many steps i needed in order to avoid signal collisions. First i tried to use only one 2s timer for the whole proccess but i had a rough time doing it, so that's why i used plenty more. The only 2s timer that are inmerse in the process are the ones from Timer0 up to Timer 5 (T0-T5). I made two different processes for the double acting cylinder that carries the piece. The first one was for the intermediate stops and the second one was for the Bath 02. The program has many networks because i meant to create a fully animated HMI that was both pretty and functional. Hope you find useful. interesting, and/or at least don't too messy. Thanks. Enrique Morán Garrido UDLAP	**Family**	
Version	0.1	**User-defined ID**					

Name	Data type	Offset	Default value	Comment
▼ Temp				
OB1_EV_CLASS	Byte	0.0		Bits 0-3 = 1 (Coming event), Bits 4-7 = 1 (Event class 1)
OB1_SCAN_1	Byte	1.0		1 (Cold restart scan 1 of OB 1), 3 (Scan 2-n of OB 1)
OB1_PRIORITY	Byte	2.0		Priority of OB Execution
OB1_OB_NUMBR	Byte	3.0		1 (Organization block 1, OB1)
OB1_RESERVED_1	Byte	4.0		Reserved for system
OB1_RESERVED_2	Byte	5.0		Reserved for system
OB1_PREV_CYCLE	Int	6.0		Cycle time of previous OB1 scan (milliseconds)
OB1_MIN_CYCLE	Int	8.0		Minimum cycle time of OB1 (milliseconds)
OB1_MAX_CYCLE	Int	10.0		Maximum cycle time of OB1 (milliseconds)
OB1_DATE_TIME	Date_And_Time	12.0		Date and time OB1 started
Constant				

Network 1: Activate State 1 network - Place the cage

This network describes how to activate the State 01 of the stateflow machine.
To activate the State 1 (S1) it is required that the double acting cylinder is in the A0 position (the bottom of the piston), while the memory of the piece (M-Piece) isn't active, AND (&&) either the physical or digital button "Down" is pressed.
This state will keep operative until the State 02 is activated

The physical step is: put down the cage so the operator can place the piece.

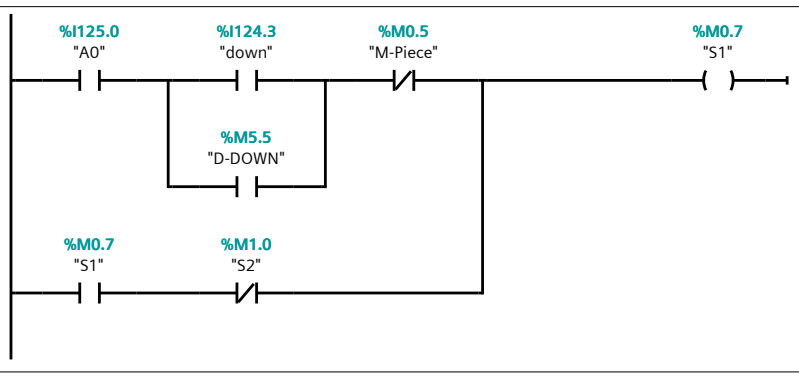

Network 2: Memory for the Piece (M-Piece) network

This network describes how to activate the memory that saves the piece once it's placed in the cage. This memory works as a sensor that detects that the piece is in the cage.
To activate the memory it is required that the State 1 (S1) is active AND (&&) either the physical or digital button "Piece" is pressed.
This memory will keep operative until the End Of Cycle (EOC), or the end of the process, is detected

The physical step is: place the piece in the cage.

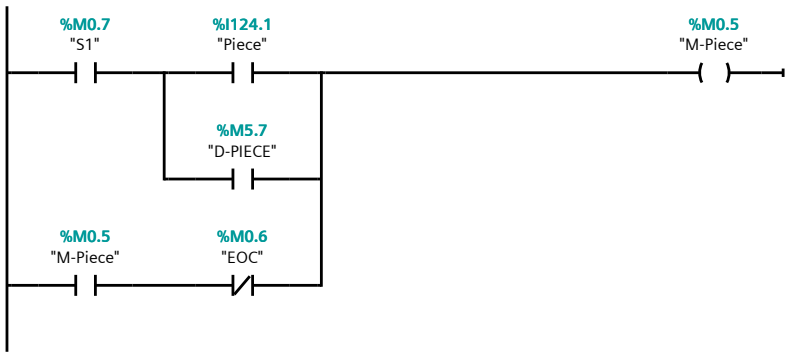

Network 3: Activate State 2 network - Rise the cage

This network describes how to activate the State 02 of the stateflow machine.
To activate the State 2 (S2) it is required that the memory of the piece (M-Piece) is working, AND (&&) either the physical or digital button "Up" is pressed.
This state will keep operative until the State 03 is activated

The physical step is: rise the cage so the process can begin.

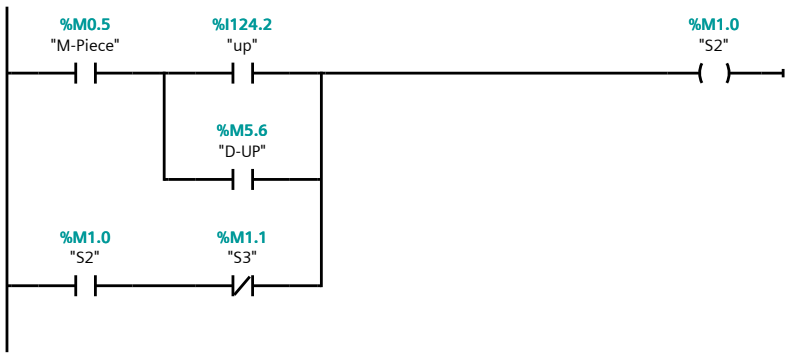

Network 4: Activate State 3 network - Start the process

This network describes how to activate the State 03 of the stateflow machine.
To activate the State 3 (S3) it is required that the double acting cylinder is in the A0 position (the bottom of the piston) while the Sate 2 is working (S2) , AND (&&) either the physical or digital button "Start" is pressed.
This state will keep operative until the State 04 is activated

The physical step is: Start the process

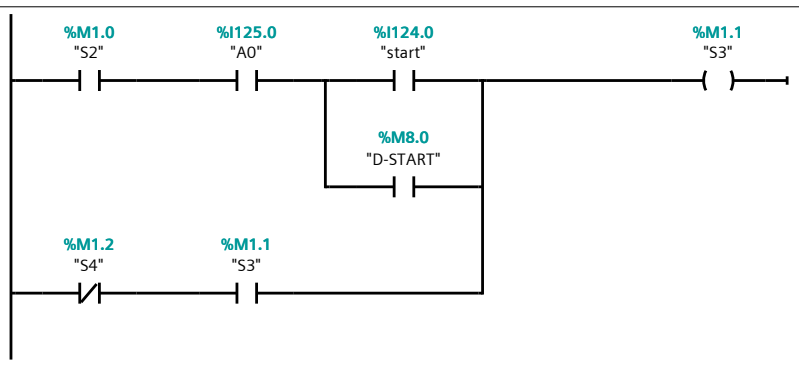

Network 5: Group 0 memory Network

This network describes how to activate the Group 0 (G0) memory. This memory is responsable for moving the cage from the home position to the bath 01 position.
To activate the G0 memory it is required that the State 3 (S3) is working (S2) , AND (&&) the cage is placed in the M0 mark (home position).
This memory will keep operative until it reaches the M1 mark (bath 01 position)

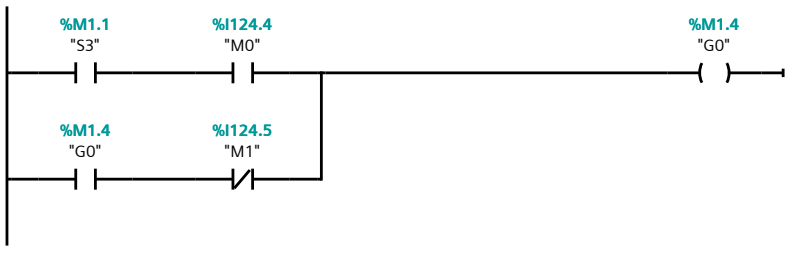

Network 6: Multiple travels memory (multi) Network

This network describes how to activate the multi memory. This memory is responsable for moving the double acting cylinder multiple intermediate times (from the half of its length to its maximum position, 5-10 cm)
To activate the multi memory it is required that either the State 4 (S4) or the State 8 (S8) are working. The memory is activated in two States because they both have multiple intermediate travels during their baths (Bath 01 and Bath03).
This memory will keep operative until the "done" memory is activated.

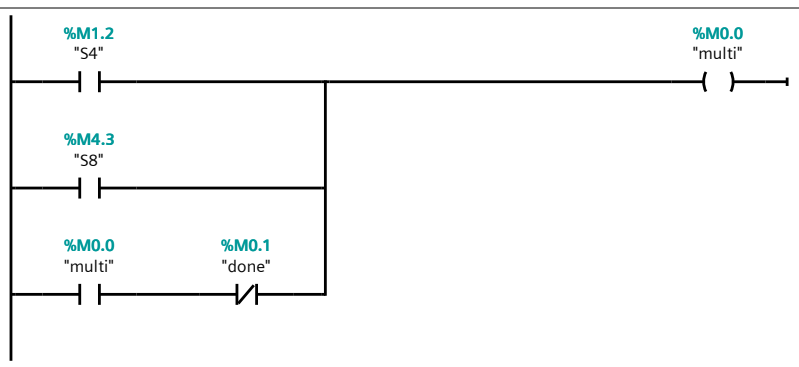

Network 7: Multiple dives counter Network

This counter is used in the multiple dives proccesses. This counts the number of times the piston has reached its maximum position (A2) and decreases its value as long as the memory "multi" is active and either the State 4 (S4) or the State (8) are active. The value of the counter is saved in the memory "CT-Done".
This counter sets its value up to 4 whenever the counter has reached its minimun displacement distance (A0), aka it will begin its 4 displacements. This mean that the piston has already returned to its retracted position.

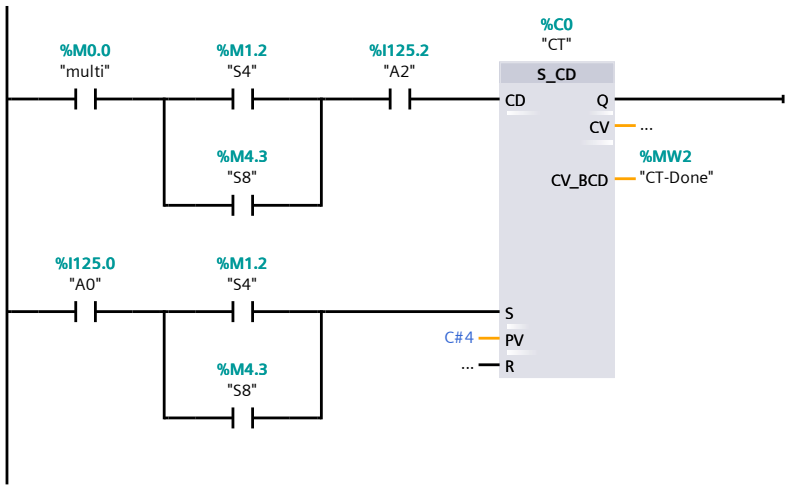

Network 8: Atimation - Counter for Bath 01 Network

This counter increases its value whenever the State 4 (S4) is active and the piston has reached the A2 mark. This counter will keep available to visualize on the HMI until the process has reached its end (EOC). The counter saves its value using the "Anim-CounterB1" memory.

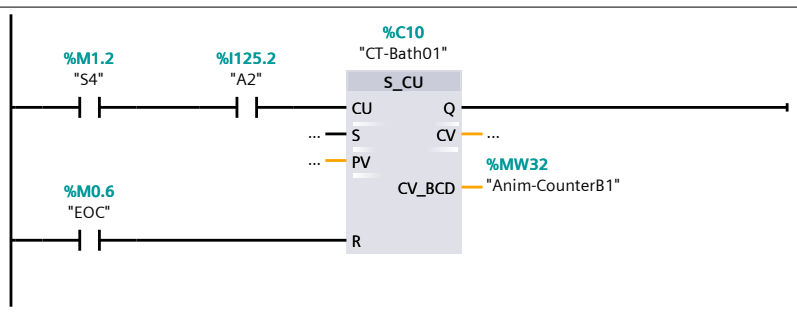

Network 9: Animation - Value for the elapsed time in the Bath 01 network.

This counter gets the value in seconds of the time that the process of the Bath 01 takes since the piece arrives the position M1 (Bath 01).
This counter only works as long as the piece is in the position M1, so, as soon as it starts moving towards the next Bath, the counter stops its count. The value of the counter is saved in the "Val-Timer-Bath01" memory.
Also, the G1 memory shouldn't be active because this is the one that moves the piece from the Bath 01 to the Bath 02.
The timer T12 switches the interval of time in which the counter should increase its count. As you can see, i used 1s, so the counter increases its value each second. The memory "Bath01Timer" is activated each second and opens up the normally closed switch that's located before the timer, so it stops the signal and the timer begins its count down once again.
This counter will keep available to visualize on the HMI until the process has reached its end (EOC).

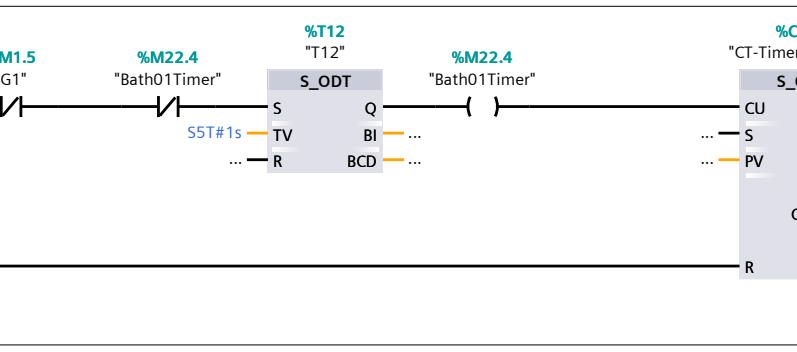

Network 10: Animation - Value for the elapsed time in the Bath 02 network.

This counter gets the value in seconds of the time that the process of the Bath 02 takes since the piece arrives the position M2 (Bath 02).
This counter only works as long as the piece is in the position M2, so, as soon as it starts moving towards the next Bath, the counter stops its count. The value of the counter is saved in the "Val-Timer-Bath02" memory.
Also, the G2 memory shouldn't be active because this is the one that moves the piece from the Bath 02 to the Bath 03.
The timer T13 switches the interval of time in which the counter should increase its count. As you can see, i used 1s, so the counter increases its value each second. The memory "Bath02Timer" is activated each second and opens up the normally closed switch that's located before the timer, so it stops the signal and the timer begins its count down once again.
This counter will keep available to visualize on the HMI until the process has reached its end (EOC).

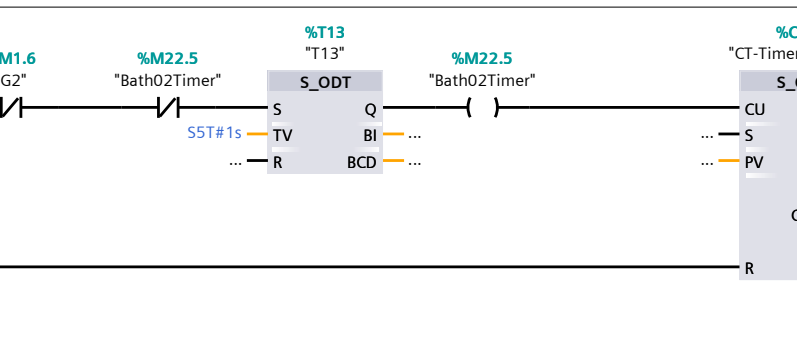

Network 11: Animation - Value for the elapsed time in the Bath 03 network.

This counter gets the value in seconds of the time that the process of the Bath 03 takes since the piece arrives the position M3 (Bath 03).
This counter only works as long as the piece is in the position M3, so, as soon as it starts moving towards the next Bath, the counter stops its count. The value of the counter is saved in the "Val-Timer-Bath03" memory.
Also, the G3 memory shouldn't be active because this is the one that moves the piece from the Bath 03 to the Home position.

The timer T14 switches the interval of time in which the counter should increase its count. As you can see, i used 1s, so the counter increases its value each second. The memory "Bath03Timer" is activated each second and opens up the normally closed switch that's located before the timer, so it stops the signal and the timer begins its count down once again.
This counter will keep available to visualize on the HMI until the process has reached its end (EOC).

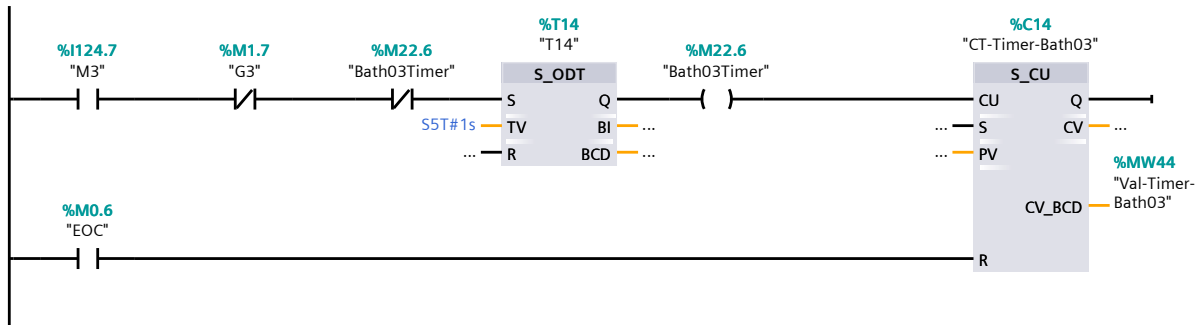

Network 12: Atimation - Counter for Bath 03 Network

This counter increases its value whenever the State 8 (S8) is active and the piston has reached the A2 mark. This counter will keep available to visualize on the HMI until the process has reached its end (EOC). The counter saves its value using the "Anim-CounterB3" memory.

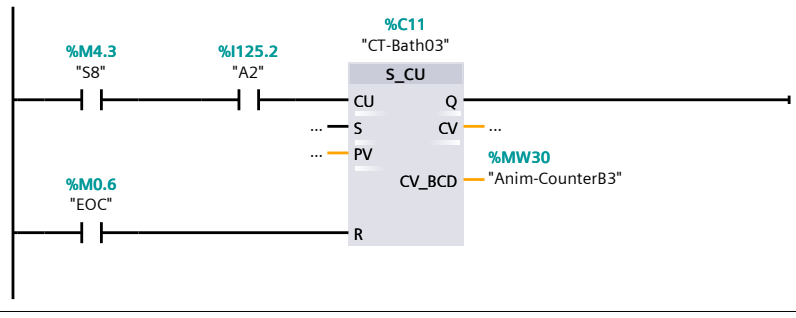

Network 13: Counter Done Memory Network

This network describes the activation of the memory "M-CT". This memory is activated whenever the memory CT-Done is equal to 0.

Network 14: Done memory Network

This memory is activated when the k2 memory is working while the "multi" memory is active, AND (&&) the Counter Done memory (M-CT) is activated.

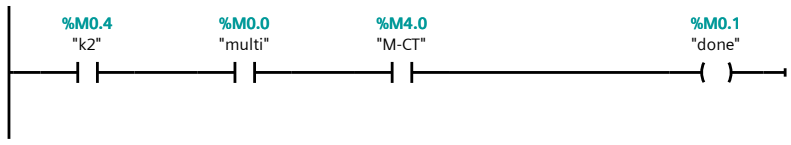

Network 15: Activate State 5 network - Start the process

This network describes how to activate the State 05 of the stateflow machine.
To activate the State 5 (S5) it is required that the Sate 2 is working (S2) , AND (&&) the "done" memory is active.
This state will keep operative until the State 06 is activated

The physical step is: The piece in the bath 01 has made all its travels (has reached the A2 mark the 4 times).

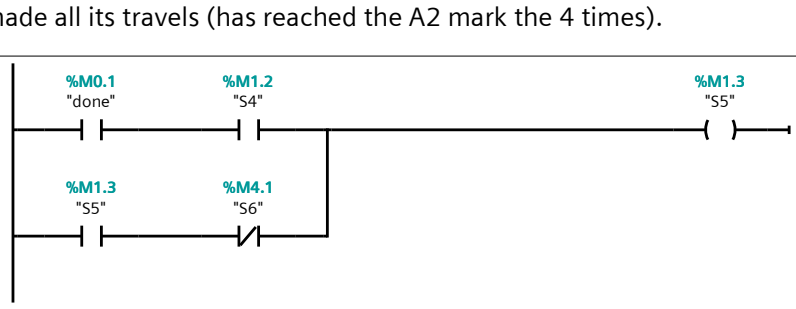

Network 16: Activate State 9 network - Start the process

This network describes how to activate the State 09 of the stateflow machine.
To activate the State 9 (S9) it is required that the Sate 2 is working (S8) , AND (&&) the "done" memory is active.
This state will keep operative until the process ends (EOC).

The physical step is: The piece in the bath 03 has made all its travels (has reached the A2 mark the 4 times).

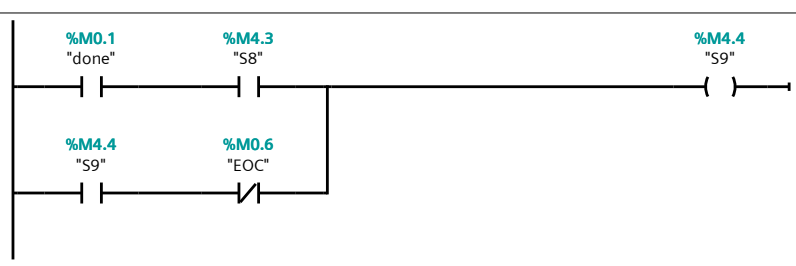

Network 17: K1 (forward piston displacement) network

K1 is a memory that is active as long as the piston which dives the piece in the bath 01 or bath 01 hasn't reached its maximun position. The first requirement for this memory to be activated is that the piston is located at the A0 mark (completely retracted). Then, the counter must be different from 0, so the normally closed switch "M-CT" keeps closed. Also, the "multi" memory must be active. Finally, either the State 4 (S4) or the State 8 (S8) must be active.
As soon as the piston starts moving, it won't be in the A0 mark anymore, so that's why the second branch is connectes just after the A0 switch, and this branch will be active until it reaches the A2 mark.
The other way to active the K1 memory is to be located in the A1 mark, and the process is exactly the same as in the A0 mark. This substitute the A0 mark until the counter reaches 0. This makes it possible to travel from the A1 mark to the A2 mark.

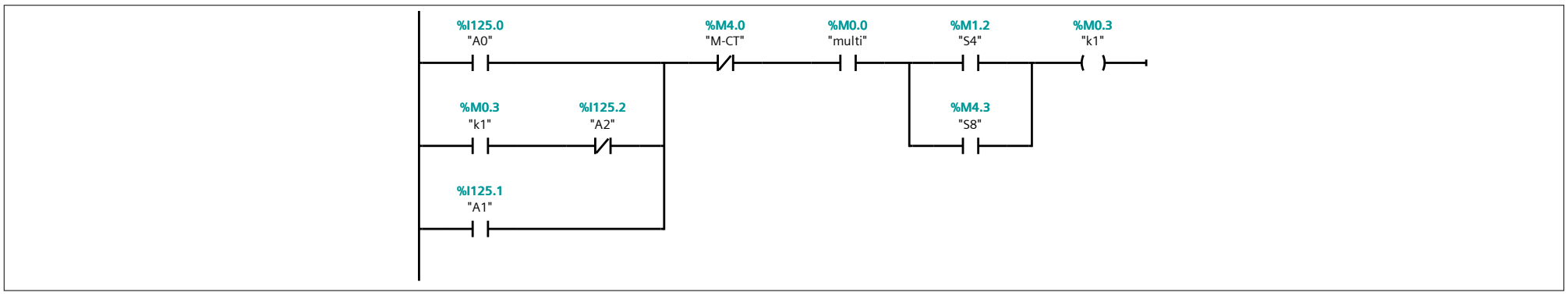

Network 18: K2 (backwards piston displacement) network

K2 is a memory that is active as long as the piston which dives the piece in the bath 01 or bath 01 hasn't reached its maximun position. The first requirement for this memory to be activated is that the piston is located at the A2 mark (maximum distance). Then, the counter must be different from 0, so the normally closed switch "M-CT" keeps closed. Similarly, the "done" memory must be off in order to keep the normally closed switch closed. Also, the "multi" memory must be active. Finally, either the State 4 (S4) or the State 8 (S8) must be active.
As soon as the piston starts moving, it won't be in the A2 mark anymore, so that's why the second branch is connectes just after the A2 switch, and this branch will be active until it reaches the A1 mark.
The other way to active the K2 memory is to be located in a position different from the A0 mark AND the counter must has reached 0, then the process is exactly the same as in the A2 mark, except that this time it connects the branch after the M-CT normally closed switch. This makes it possible to travel from the A2 mark to the A1 mark.

This memory is also used to make the piston retracts up to the A0 position. The only requirements are to be located in a different mark from A0 AND to be either in the State 5 or the State 9.

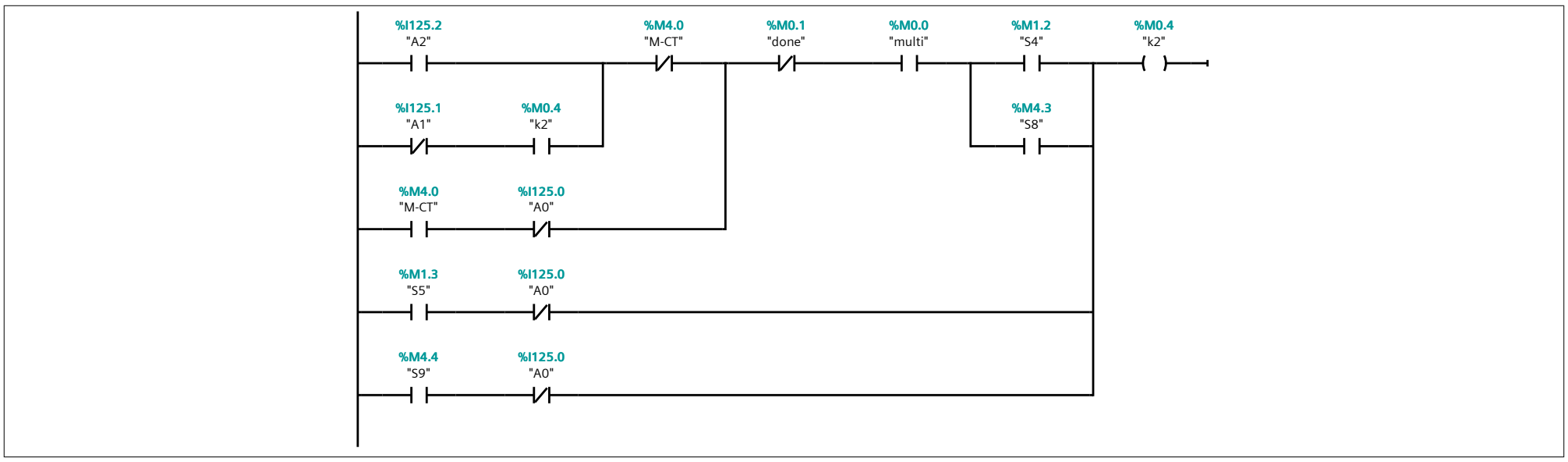

Network 19: 2s Timer for State 4 or T2S-Done memory Network

This network describes how the State 4 (S4) is activated. First, the State 3 (S3) must be on while the piece is at the first bath (bath 01). Once the timer has finished his count down, it activates the State 4. In order to keep the State 4 working, a second branch is connected to the memory. This state will keep operative until the State 05 is activated
The second time this timer is used id to active a second 2s timer once the piece has finished all the dives in the Bath 01. Therefore, it is required that the piston is located at the A0 mark. This second timer activates a memory called "T2S-Done". This memory indicates that the 2s delay timer has ended.

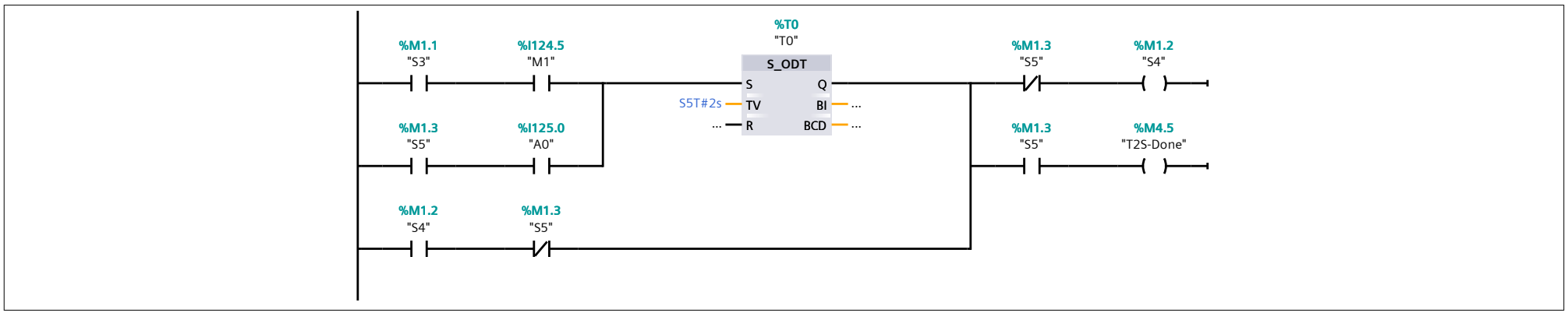

Network 20: Arrival to Bath 02 2s timer Network - Stabilize the piston at Bath 02

This network describes the 2s timer that is required once the piece has arrived the Bath 02.
In order to active the timer, the State 6 must be active AND the piece should arrive the M2 mark (Bath 02). Once the timer has ended its 2s count down, it will activate the T2S2-Done memory.

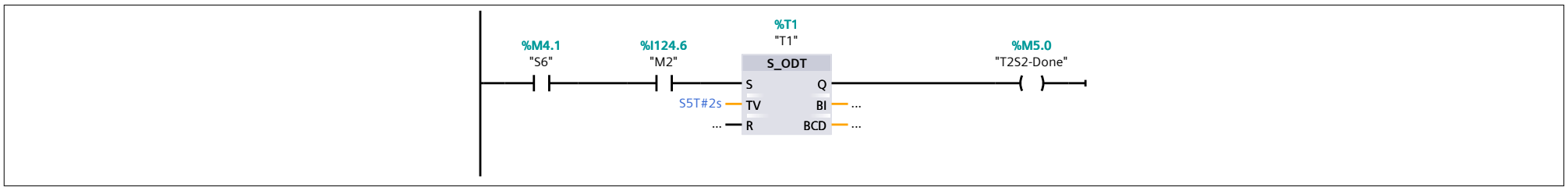

Network 21: G1 memory Network - Move piston towards Bath 02

This network describes how to activate the Group 1 (G1) memory. This memory is responsable for moving the cage from the bath 01 to the bath 02 position.
To activate the G2 memory it is required that the State 5 (S5) is working, that the T2S-Done memory is active , AND (&&) the cage hasn't reached the M2 mark (Bath 02).
This memory will keep operative until it reaches the M2 mark (bath 02 position)

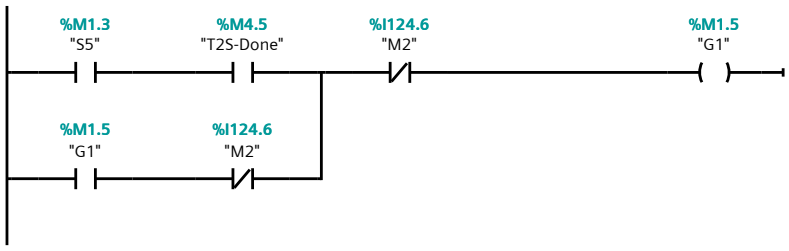

Network 22: Activate State 6 network - Bath 02 Process

This network describes how to activate the State 06 of the stateflow machine.
To activate the State 6 (S6) it is required that the Sate 5 is working (S2) , AND (&&) the "M2" memory is active (Piece located at the Bath 02).
This state will keep operative until the State 07 is activated

The physical step is: The piece has arrived the bath 02.

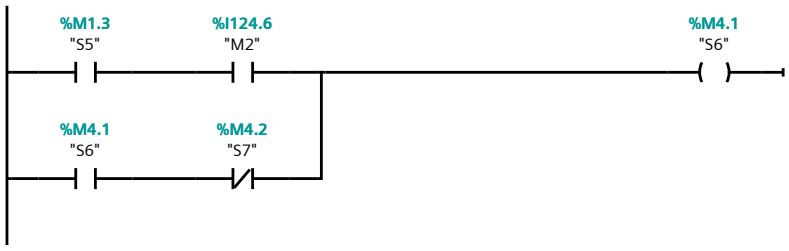

Network 23: Sdown memory network - Dive the piece

This network describes how to activate the Sdown memory. This memory moves the piston from the A0 mark to the A2 mark (from its initial position to the end).
To activate the memory it is required that the Sate 6 is working (S6) , AND (&&) the "T2S2-Done" memory is active (Two second timer after the piston has reached the station), AND the piston hasn't reached the A2 position.
This memory will keep operative until the signal from the A2 signal is received.

The physical step is: Dive the piston to its maximum position.

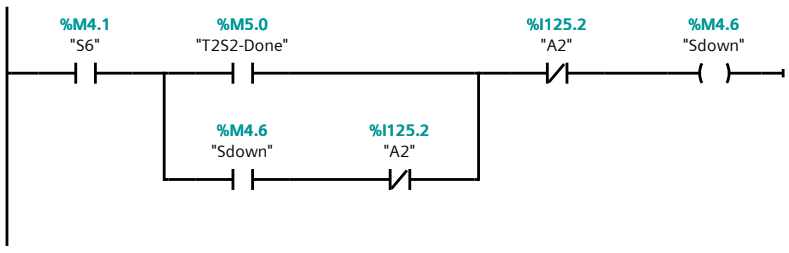

Network 24: 4s Timer for the activation of the State 7 network

This network describes how to activate the State 7 (S7). This state is indicates that once the piston is dived into the bath 02, a 4s timer has ended its count.
To activate the memory it is required that the Sate 6 is working (S6) , AND (&&) the piston has reached the A2 position.
This memory will keep operative until the signal from the State 8 (S8) is activated.

The physical step is: Keep the piston in the bottom of the bath during 4 seconds.

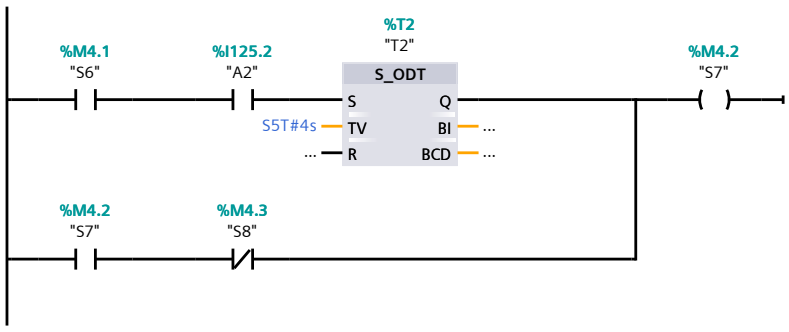

Network 25:

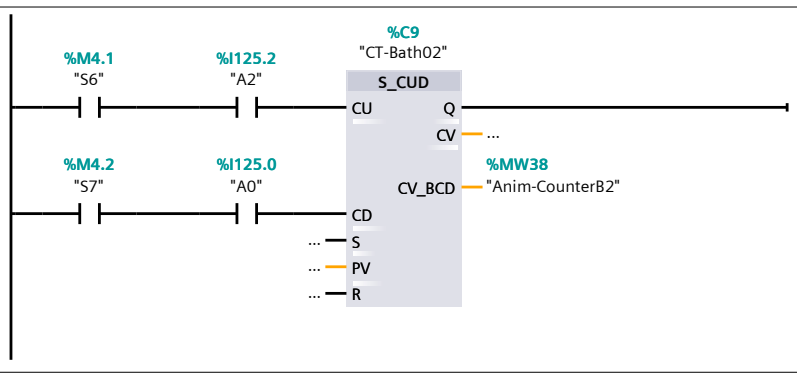

Network 26: G2 memory Network - Move piston towards Bath 03

This network describes how to activate the Group 2 (G2) memory. This memory is responsable for moving the cage from the bath 02 to the bath 03 position.
To activate the G2 memory it is required that the State 7 (S5) is working, AND (&&) the piece has reached the A0 mark (has rised and reached A0). Then a 2s timer will be activated indicating that the 2s timer for stabilization requirement has finished.
This memory will keep operative until it reaches the M3 mark (bath 03 position)

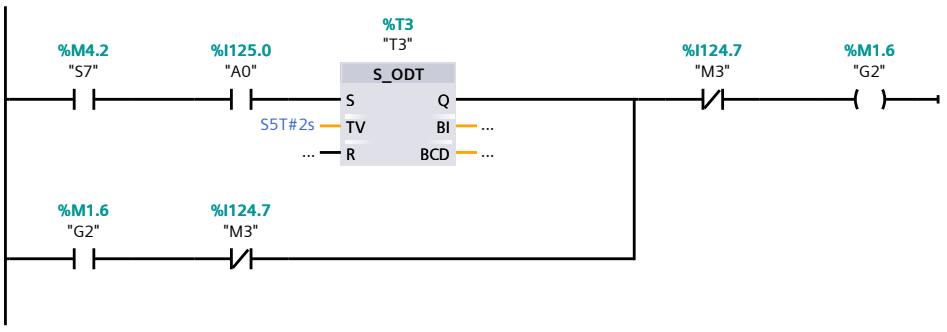

Network 27: Sup memory network - Rise the piece

This network describes how to activate the Sup memory. This memory moves the piston from the A2 mark to the A2 mark.
To activate the memory it is required that the Sate 7 is working (S7) , AND neither the piston hasn't reached the A0 position, nor the G2 memory is working.
This memory will keep operative until the signal from the A0 mark is received or the G2 memory is activated.

The physical step is: Rise the piston.

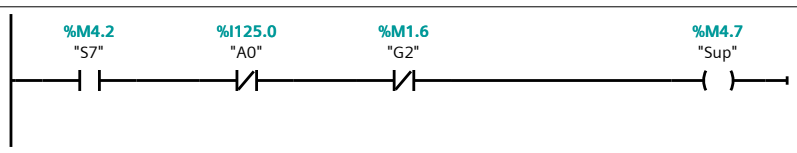

Network 28: 2s Timer for stabilization in Bath 03 network

This network describes how to activate the memory T2S3-Done. This memory is indicates that once the piston has positioned above the bath 03, a 2s timer has already been completed. This 2s timer is the required time to stabilize the piece/cage once it has reached the M3 mark (bath 03).
To activate the memory it is required that the cage reaches the M3 position.

The physical step is: 2s timer for stabilization.

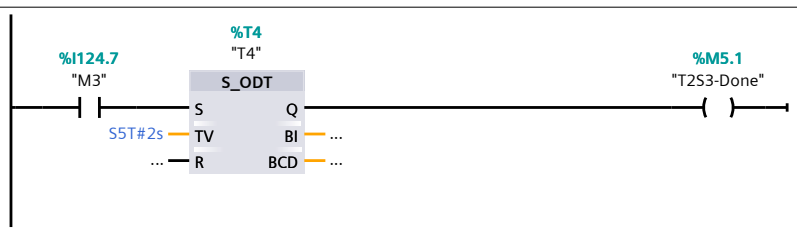

Network 29: Ativation of State 8 network

This network describes how to activate the State 8 (S8). This state is indicates that once 2s timer described in the network above has finished its count down.
To activate the memory it is required that the T2S3-Done memory is working.
This memory will keep operative until the signal from the State 9 (S9) is activated.

The physical step is: Ready to begin the process in the bath 03.

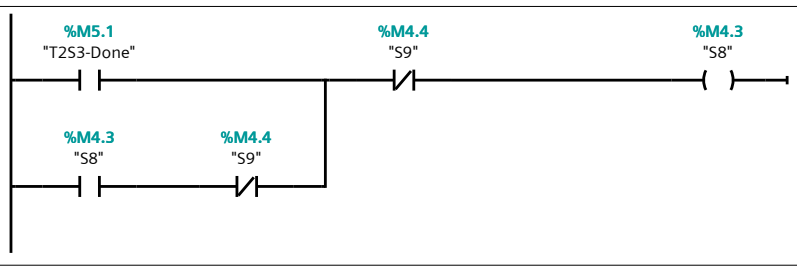

Network 30: Second 2s Timer for stabilization in Bath 03 network

This network describes how to activate the memory T2S4-Done. This memory is indicates that once the piston has finished its dives and reached the A0 position, a 2s timer has already been completed. This 2s timer is the required time to stabilize the piece/cage once it has completed all its dives and reached A0.
To activate the memory it is required that the cage is in the A0 position while the State 9 (S9) is still active, AND the cage is at the station 3 (M3 or Bath 03).

The physical step is: 2s timer for stabilization.

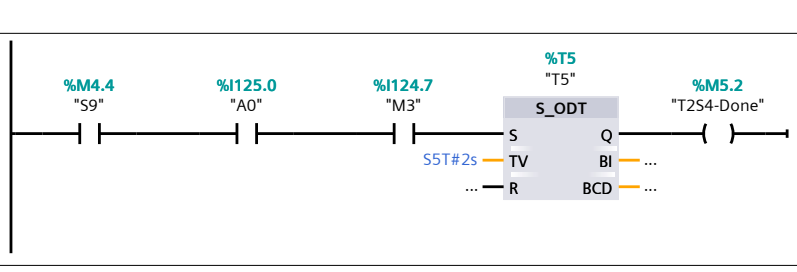

Network 31: G3 memory Network - Move piston towards Home position

This network describes how to activate the Group 3 (G3) memory. This memory is responsable for moving the cage from the bath 03 to the home position.
To activate the G3 memory it is required that the memory describre above (T2S4-Done) is working, AND (&&) the piece hasn't reached the M0 mark (has reached the home position).
This memory will keep operative until it reaches the M0 mark (Home position)

The physical step is: The piece in the bath 03 has made all its travels and stabilized itself on its top (A0). Then, it's moving towards the Home position.

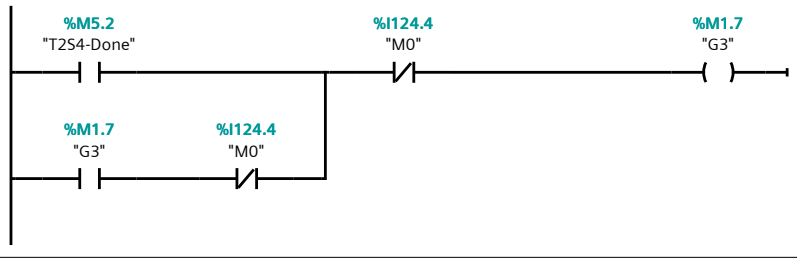

Network 32: End Of Cylce network

This networks describes the end of the process. The process end once the cage has reached once again the Home position (M0).
To activate the EOC memory, the State 9 must be working and the M0 position must have been reached.

Network 33: Y1 (piston forward movement) network

This network describes the conditions for the piston to move in a forward direction.

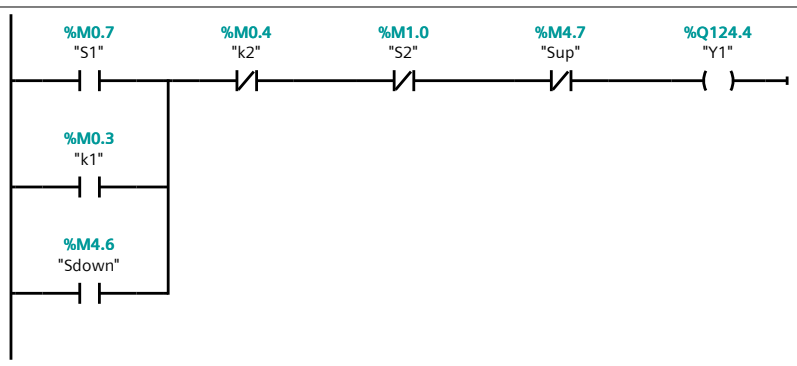

Network 34: Y2 (piston backward movement) network

This network describes the conditions for the piston to move in a backward direction.

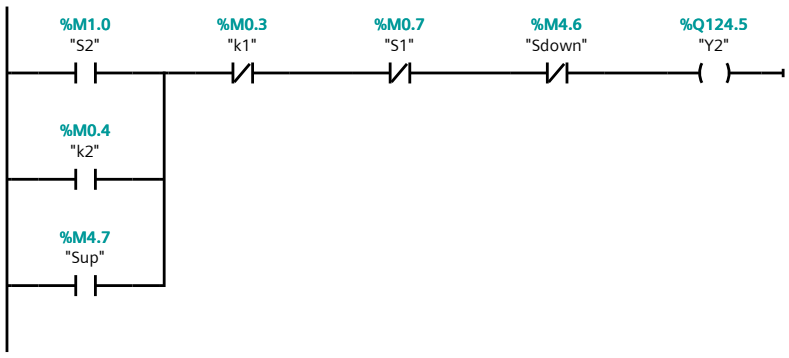

Network 35: Y3 (cage forward movement) network

This network describes the conditions for the cage to move in a forward direction.

Network 36: Y4 (cage backward movement) network

This network describes the conditions for the cage to move in a backward direction.

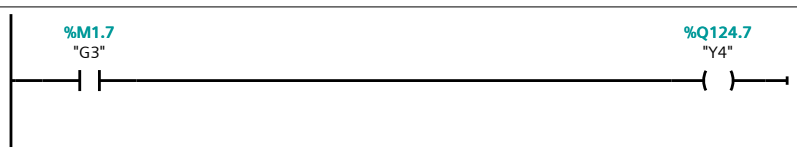

Network 37: On - Lamp 1 - memory network

This network describes the conditions for the Lamp 1 to be ON.

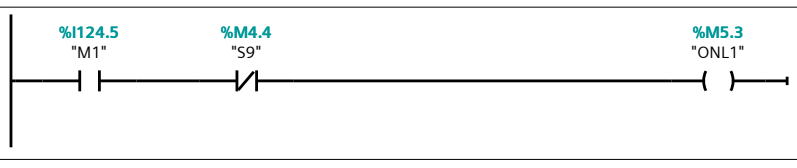

Network 38: On - Lamp 2 - memory network

This network describes the conditions for the Lamp 2 to be ON.

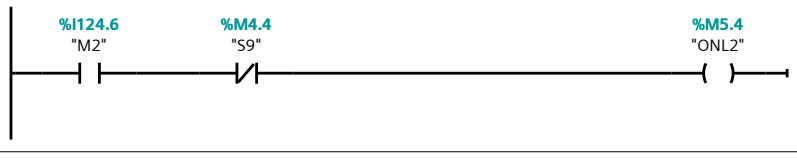

Network 39: Lamp Home network

This network describes what conditions are required in order to turn on the "Home" lamp.

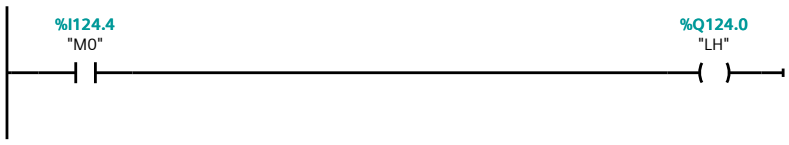

Network 40: Lamp 1 network

This network describes what conditions are required in order to turn on the Lamp 1.

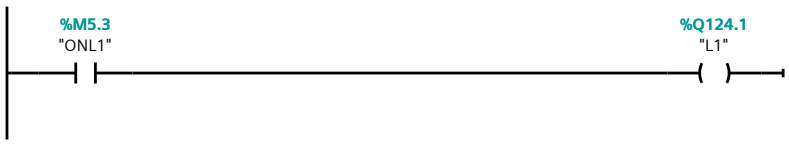

Network 41: Lamp 2 network

This network describes what conditions are required in order to turn on the Lamp 2.

Network 42: Lamp 3 network

This network describes what conditions are required in order to turn on the Lamp 3.

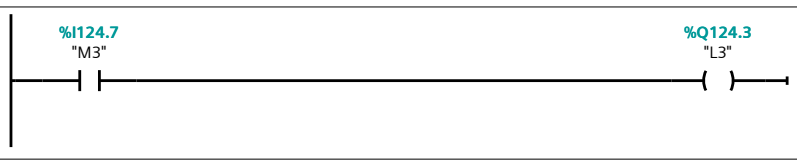

Network 43:

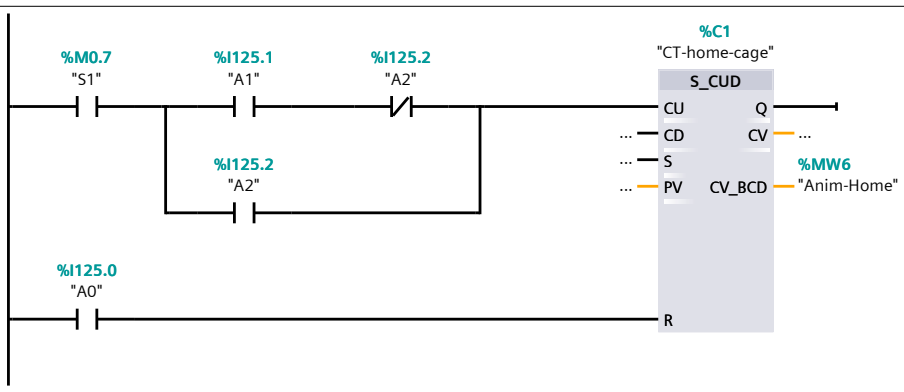

Network 44:

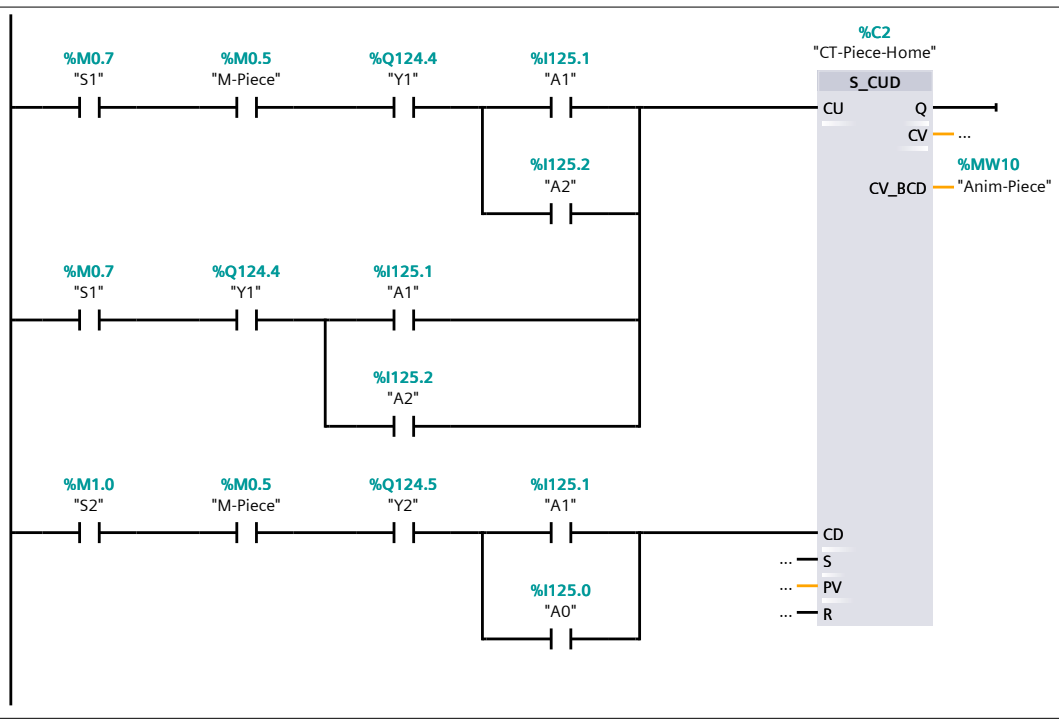

Network 45:

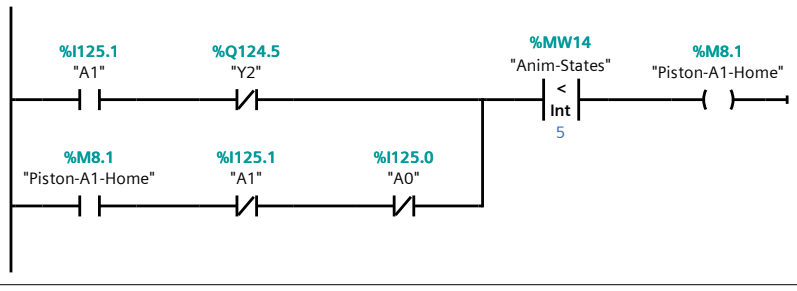

Network 46:

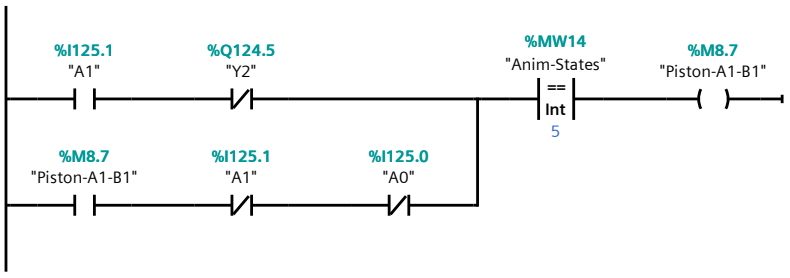

Network 47:

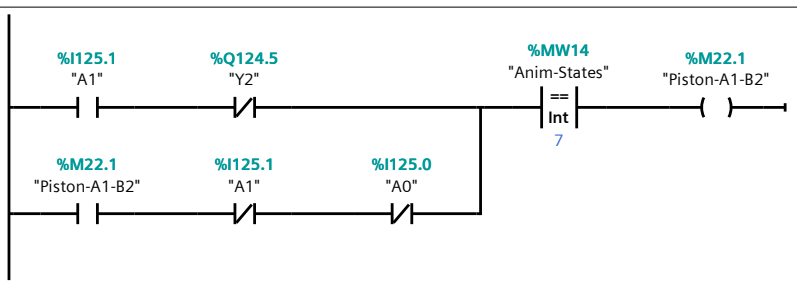

Network 48:

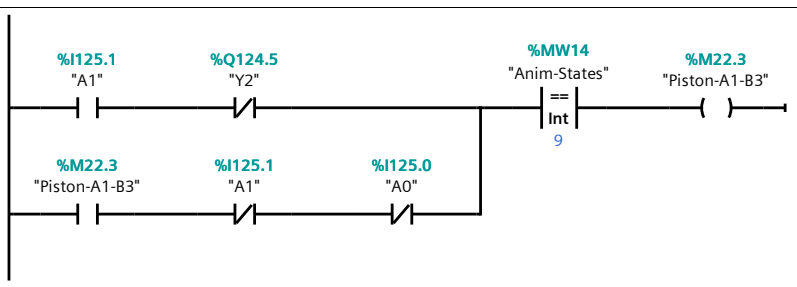

Network 49:

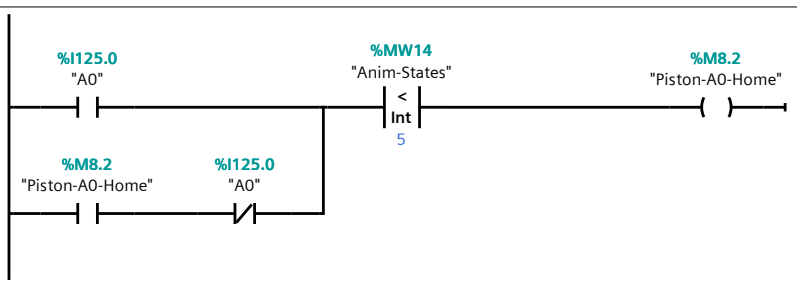

Network 50:

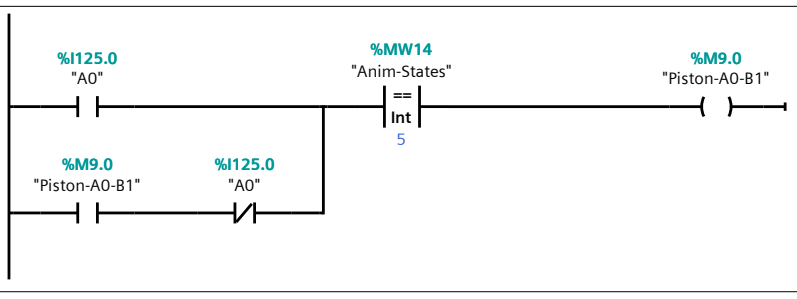

Network 51:

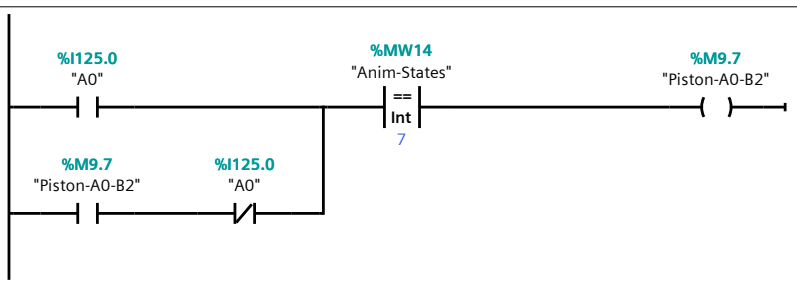

Network 52:

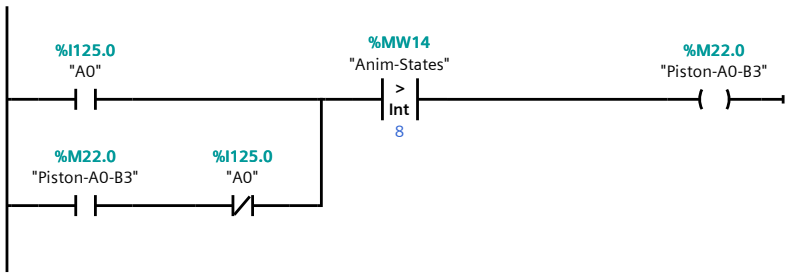

Network 53:

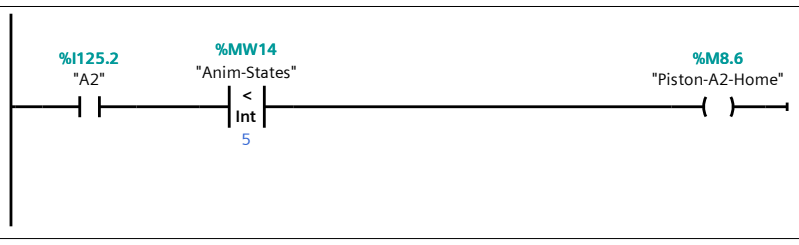

Network 54:

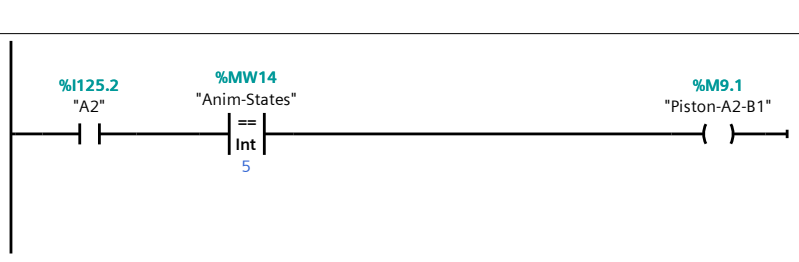

Network 55:

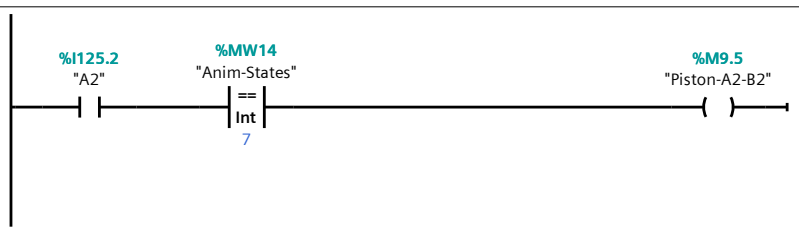

Network 56:

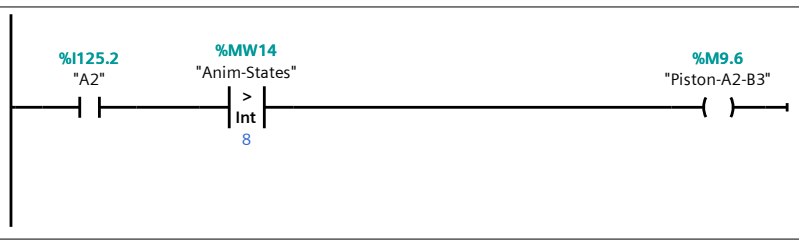

Network 57:

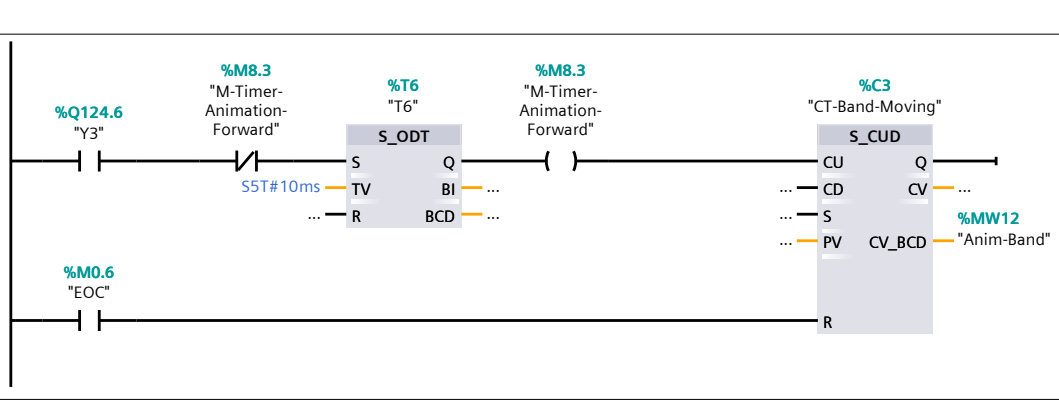

Network 58:

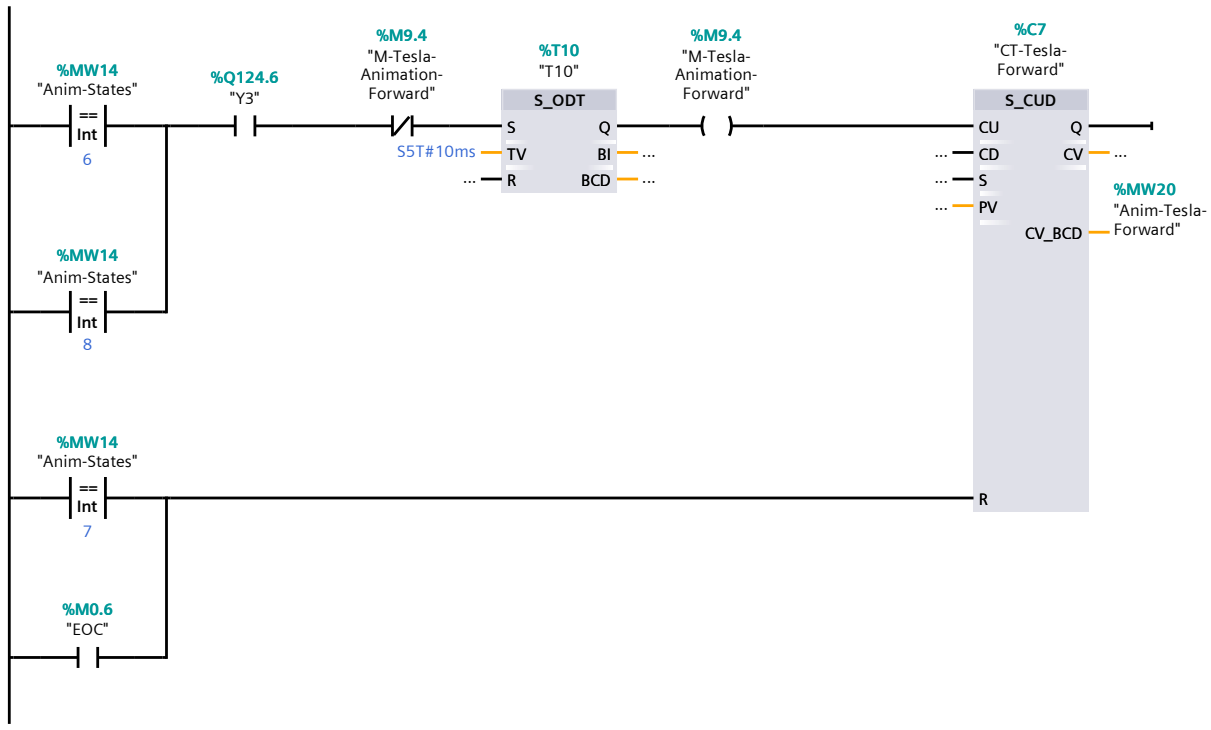

Network 59:

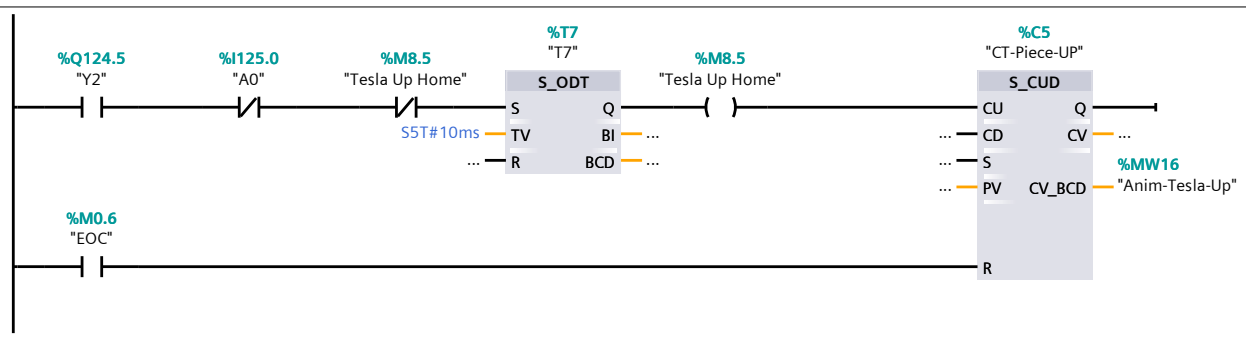

Network 60:

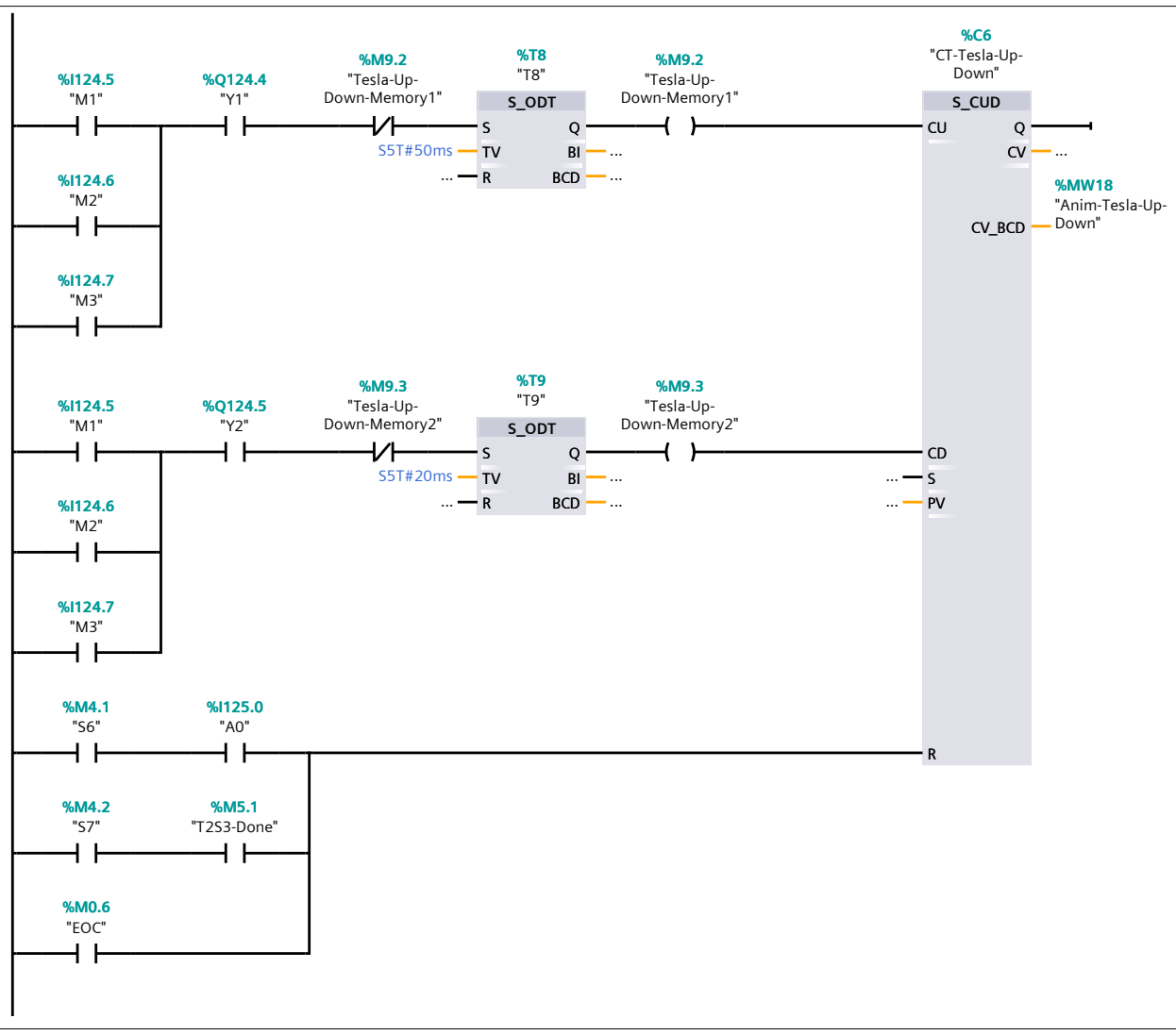

Network 61:

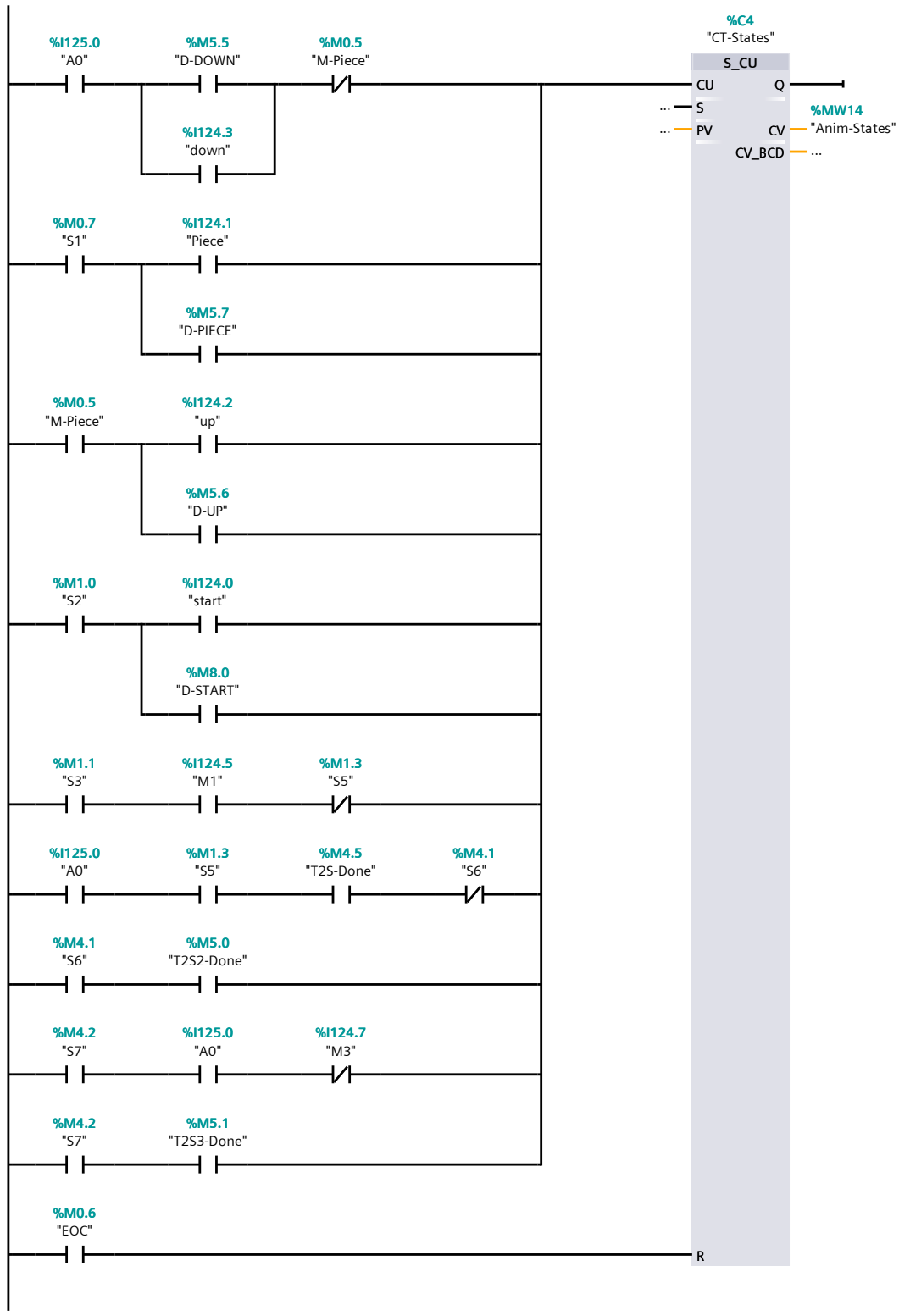
%I125.0
"A0"
%M5.5
"D-DOWN"
%M0.5
"M-Piece"
%I124.3
"down"
%C4
"CT-States"
S_CU
CU
Q
S
PV
CV
CV_BCD
%MW14
"Anim-States"
%M0.7
"S1"
%I124.1
"Piece"
%M5.7
"D-PIECE"
%M0.5
"M-Piece"
%I124.2
"up"
%M5.6
"D-UP"
%M1.0
"S2"
%I124.0
"start"
%M8.0
"D-START"
%M1.1
"S3"
%I124.5
"M1"
%M1.3
"S5"
%I125.0
"A0"
%M1.3
"S5"
%M4.5
"T2S-Done"
%M4.1
"S6"
%M4.1
"S6"
%M5.0
"T2S2-Done"
%M4.2
"S7"
%I125.0
"A0"
%I124.7
"M3"
%M4.2
"S7"
%M5.1
"T2S3-Done"
%M0.6
"EOC"
R

Network 62:

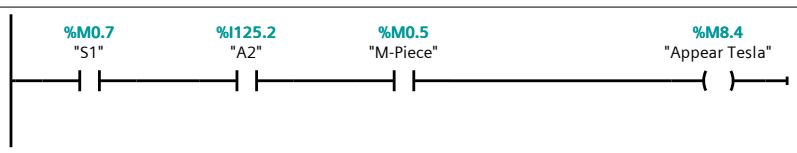
%M0.7
"S1"
%I125.2
"A2"
%M0.5
"M-Piece"
%M8.4
"Appear Tesla"