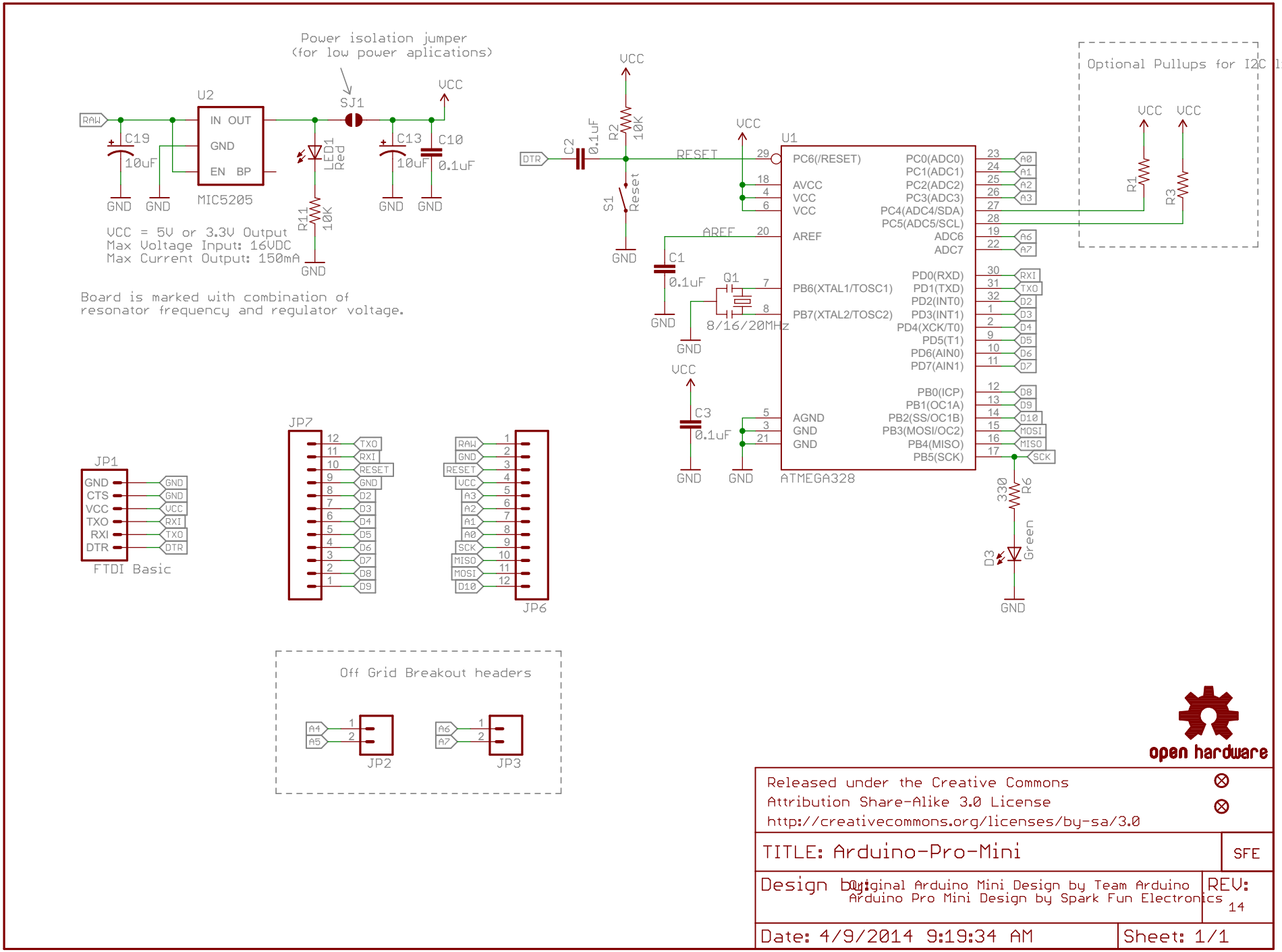
Power isolation jumper
(for low power aplications)
U2
IN OUT
GND
EN BP
MIC5205
RAW
C19
10uF
GND
GND
SJ1
VCC
LED1
Red
R11
10K
C13
10uF
C10
0.1uF
GND
GND
VCC = 5V or 3.3V Output
Max Voltage Input: 16VDC
Max Current Output: 150mA
Board is marked with combination of
resonator frequency and regulator voltage.
DTR
C2
0.1uF
R2
10K
VCC
RESET
S1
Reset
GND
U1
PC6(/RESET)
AVCC
VCC
VCC
AREF
PB6(XTAL1/TOSC1)
PB7(XTAL2/TOSC2)
AGND
GND
GND
PC0(ADC0)
PC1(ADC1)
PC2(ADC2)
PC3(ADC3)
PC4(ADC4/SDA)
PC5(ADC5/SCL)
ADC6
ADC7
PD0(RXD)
PD1(TXD)
PD2(INT0)
PD3(INT1)
PD4(XCK/T0)
PD5(T1)
PD6(AIN0)
PD7(AIN1)
PB0(ICP)
PB1(OC1A)
PB2(SS/OC1B)
PB3(MOSI/OC2)
PB4(MISO)
PB5(SCK)
ATMEGA328
C1
0.1uF
Q1
8/16/20MHz
C3
0.1uF
Optional Pullups for I2C lines
R1
R3
330
R6
D3
Green
JP1
GND
CTS
VCC
TXO
RXI
DTR
FTDI Basic
JP7
JP6
RAW
RESET
A3
A2
A1
A0
SCK
MISO
MOSI
D10
TXO
RXI
D2
D3
D4
D5
D6
D7
D8
D9
Off Grid Breakout headers
A4
A5
JP2
A6
A7
JP3
open hardware
Released under the Creative Commons
Attribution Share-Alike 3.0 License
http://creativecommons.org/licenses/by-sa/3.0
TITLE: Arduino-Pro-Mini
SFE
Design by: Original Arduino Mini Design by Team Arduino
Arduino Pro Mini Design by Spark Fun Electronics
REV: 14
Date: 4/9/2014 9:19:34 AM
Sheet: 1/1