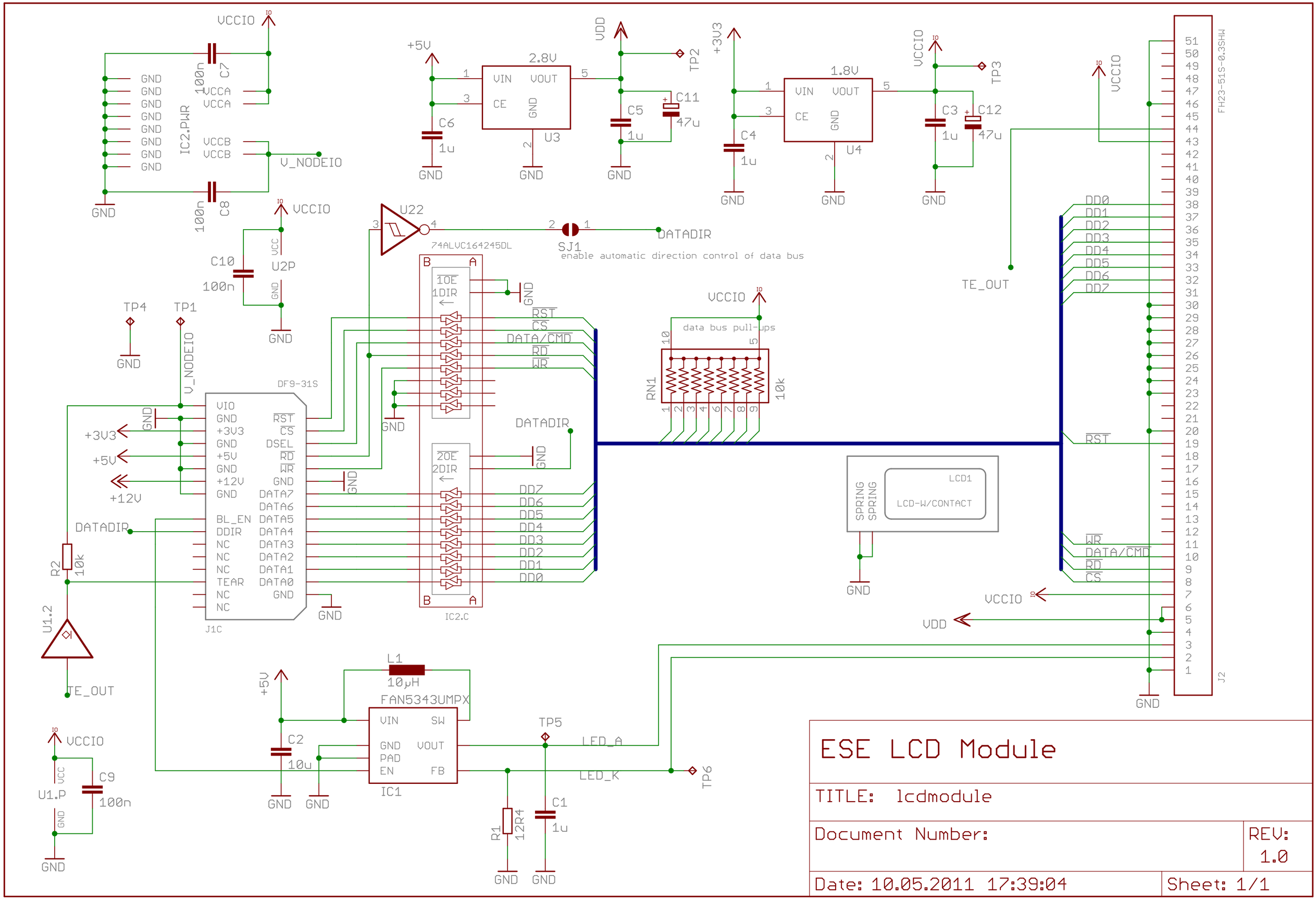

ESE LCD Module

TITLE: lcdmodule

Document Number:

REV: 1.0

Date: 10.05.2011 17:39:04

Sheet: 1/1