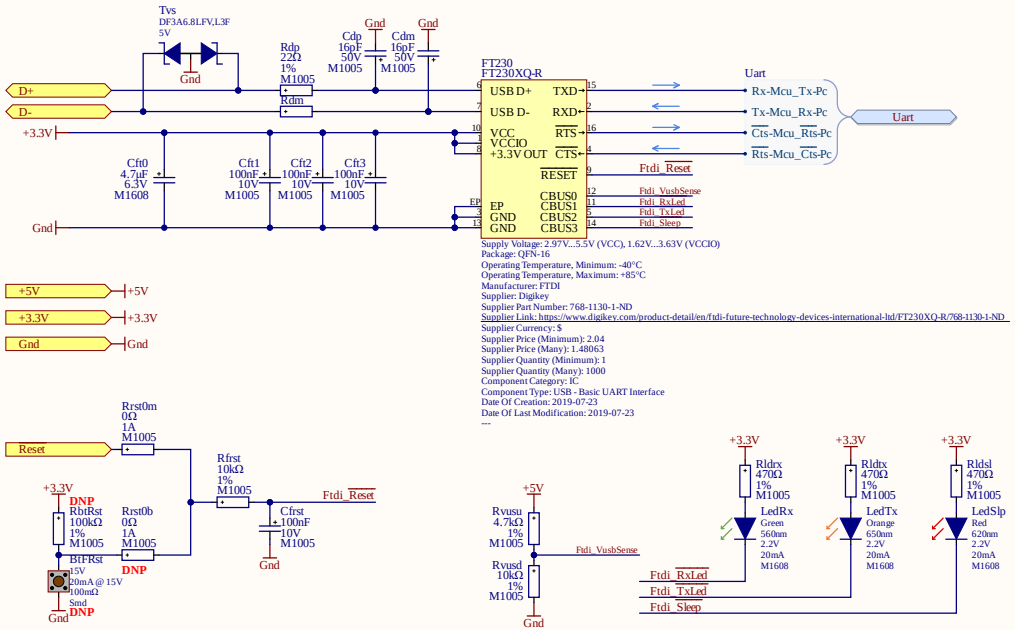

Title		
Size A3	Number	Revision
Date: 2-23-2023		Sheet of
File: D:\Development\..\Usb To Uart.SchDoc		Drawn By: