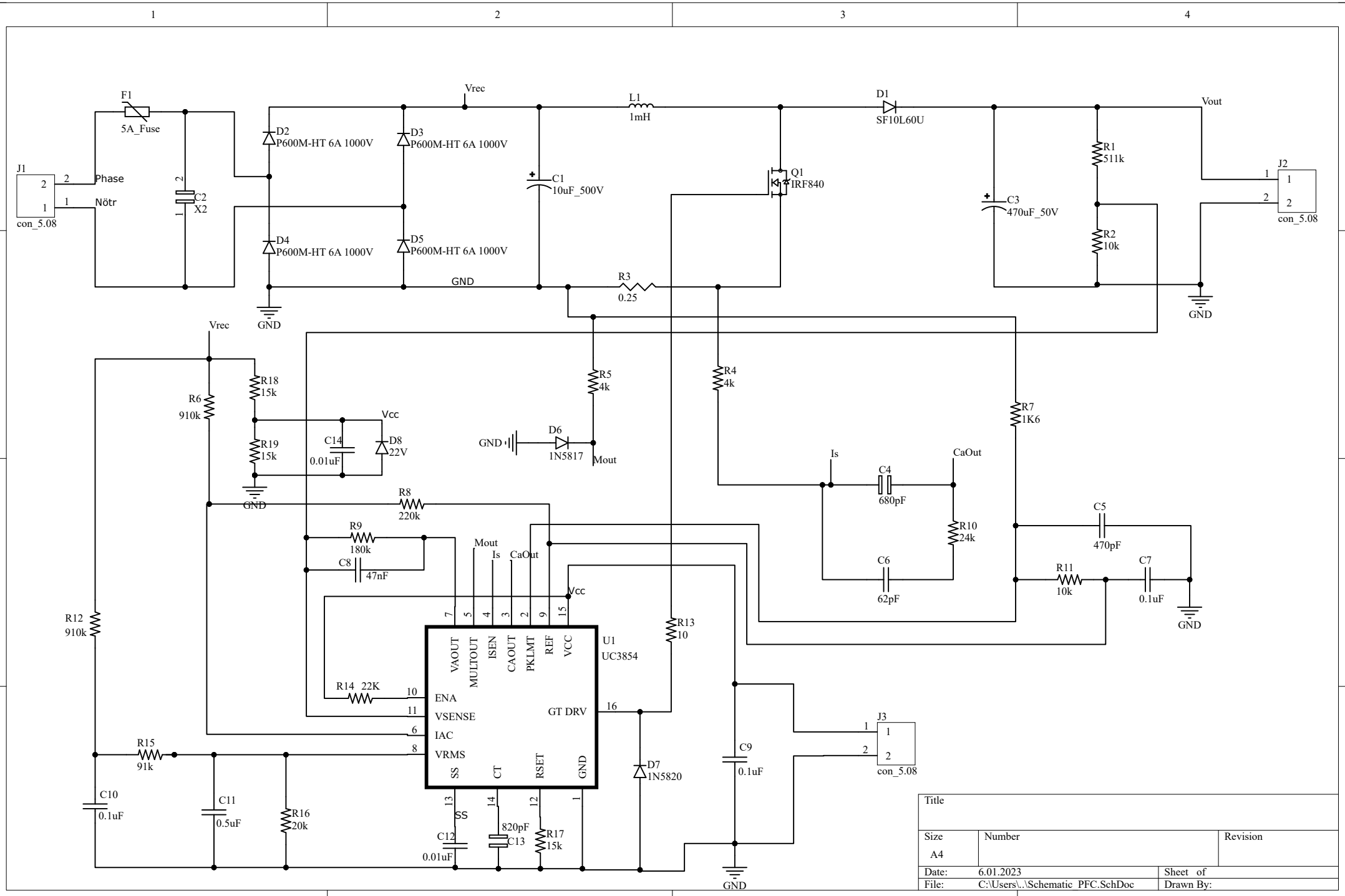
F1
5A_Fuse
J1
con_5.08
Phase
Nötr
C2
X2
D2
P600M-HT 6A 1000V
D3
P600M-HT 6A 1000V
D4
P600M-HT 6A 1000V
D5
P600M-HT 6A 1000V
Vrec
GND
C1
10uF_500V
L1
1mH
D1
SF10L60U
Q1
IRF840
R3
0.25
C3
470uF_50V
R1
511k
R2
10k
Vout
J2
con_5.08
R5
4k
R4
4k
R7
1K6
R6
910k
R18
15k
R19
15k
C14
0.01uF
D8
22V
Vcc
D6
1N5817
Mout
Is
CaOut
C4
680pF
R10
24k
C6
62pF
C5
470pF
R11
10k
C7
0.1uF
R8
220k
R9
180k
C8
47nF
R12
910k
R13
10
U1
UC3854
VAOUT
MULTOUT
ISEN
CAOUT
PKLMT
REF
VCC
ENA
VSENSE
IAC
VRMS
SS
CT
RSET
GND
GT DRV
R14 22K
R15
91k
C10
0.1uF
C11
0.5uF
R16
20k
C12
0.01uF
820pF
C13
R17
15k
D7
1N5820
C9
0.1uF
J3
con_5.08
Title
Size
A4
Number
Revision
Date: 6.01.2023
Sheet of
File: C:\Users\..\Schematic_PFC.SchDoc
Drawn By: