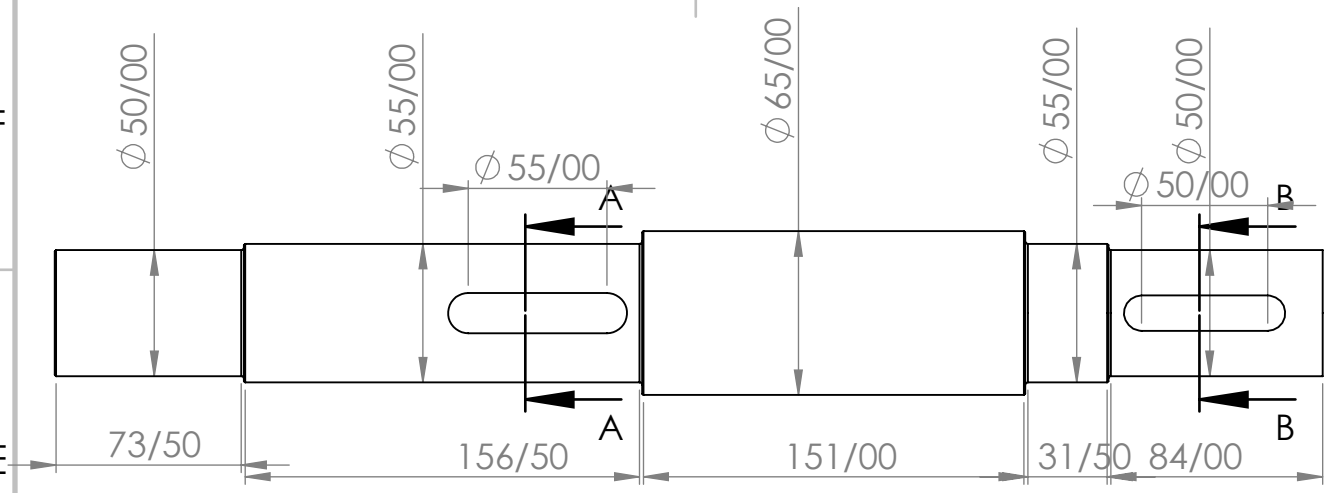

All numbers in mm

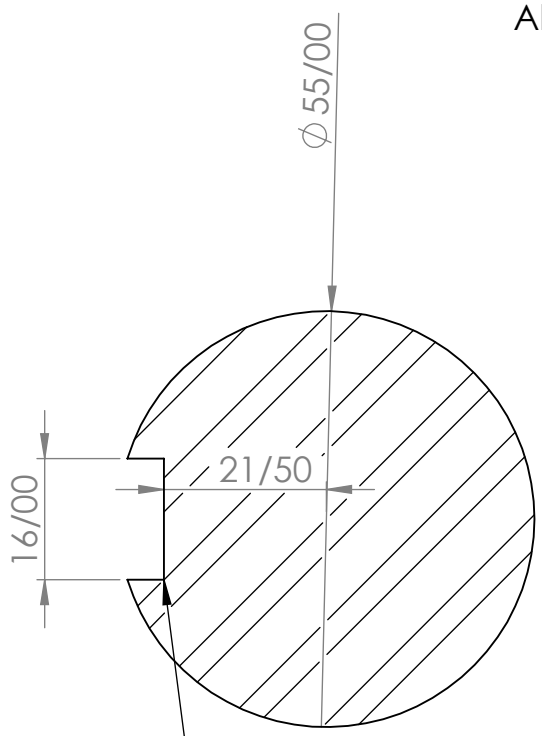

SECTION A-A
SCALE 1 : 1

R is 0.3 mm

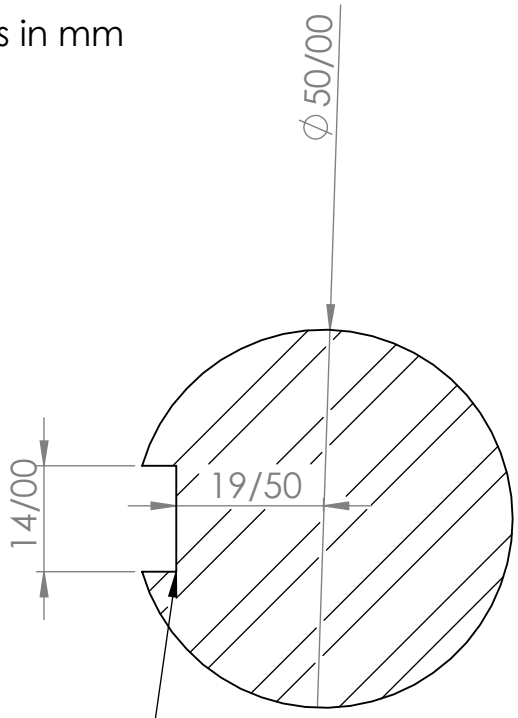

SECTION B-B
SCALE 1 : 1

R is 0.25mm

UNLESS OTHERWISE SPECIFIED: DIMENSIONS ARE IN MILLIMETERS SURFACE FINISH: TOLERANCES: LINEAR: ANGULAR:	FINISH:	DEBURR AND BREAK SHARP EDGES	DO NOT SCALE DRAWING / REVISION

	NAME	SIGNATURE	DATE
DRAWN			
CHK'D			
APPV'D			
MFG			
Q.A			

TITLE:

MATERIAL:

WEIGHT:

DWG NO. shaft3

A4

SCALE:1:5

SHEET 1 OF 1