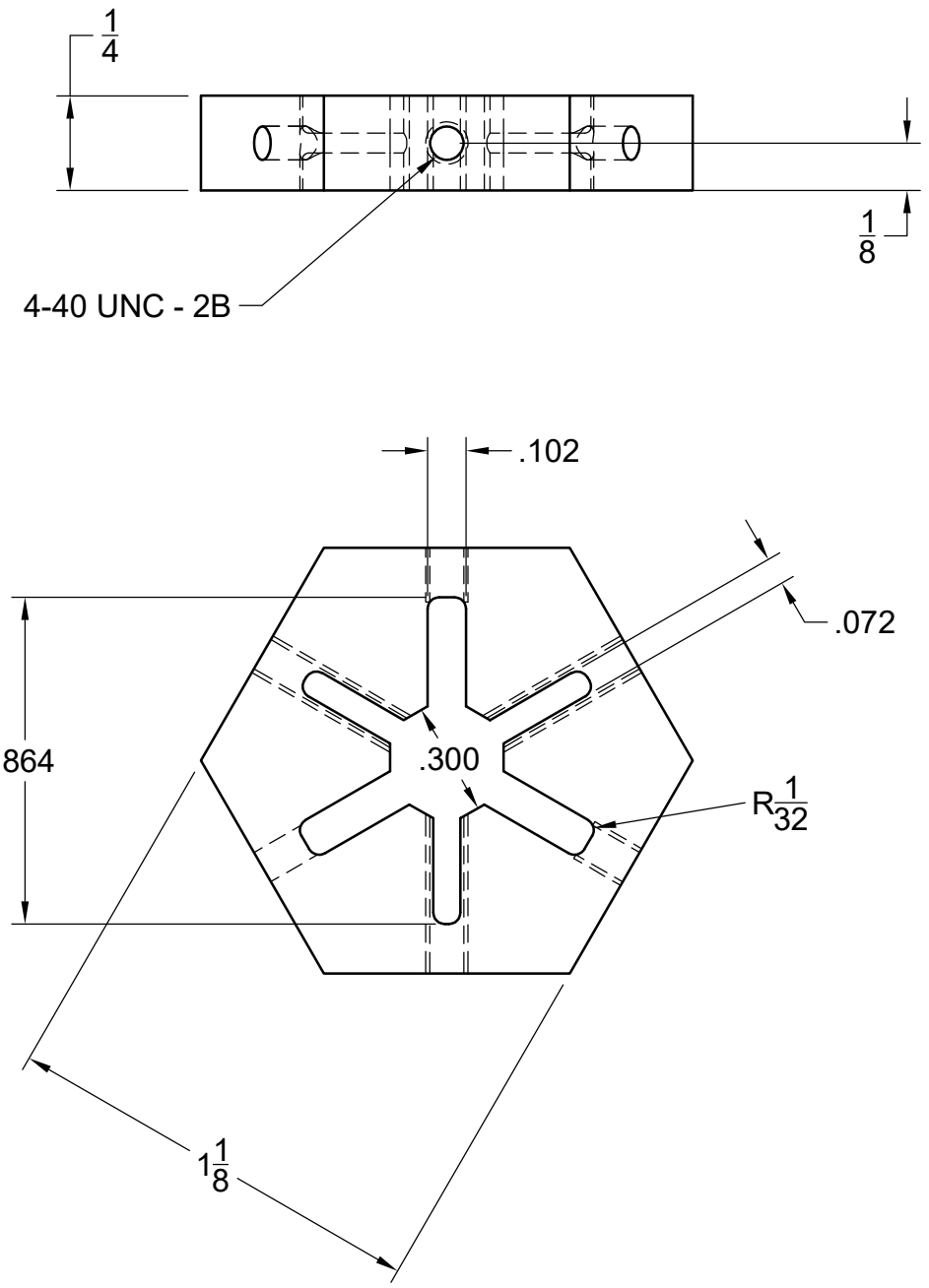

	PROJECT SHVFeedthroughFilter			
	TITLE AluminumCapacitorJig			
APPROVED	SIZE	CODE	DWG NO	REV
CHECKED	A			
DRAWN Eric Martin 8/1/2022	SCALE 2:1	WEIGHT	SHEET 1/1	