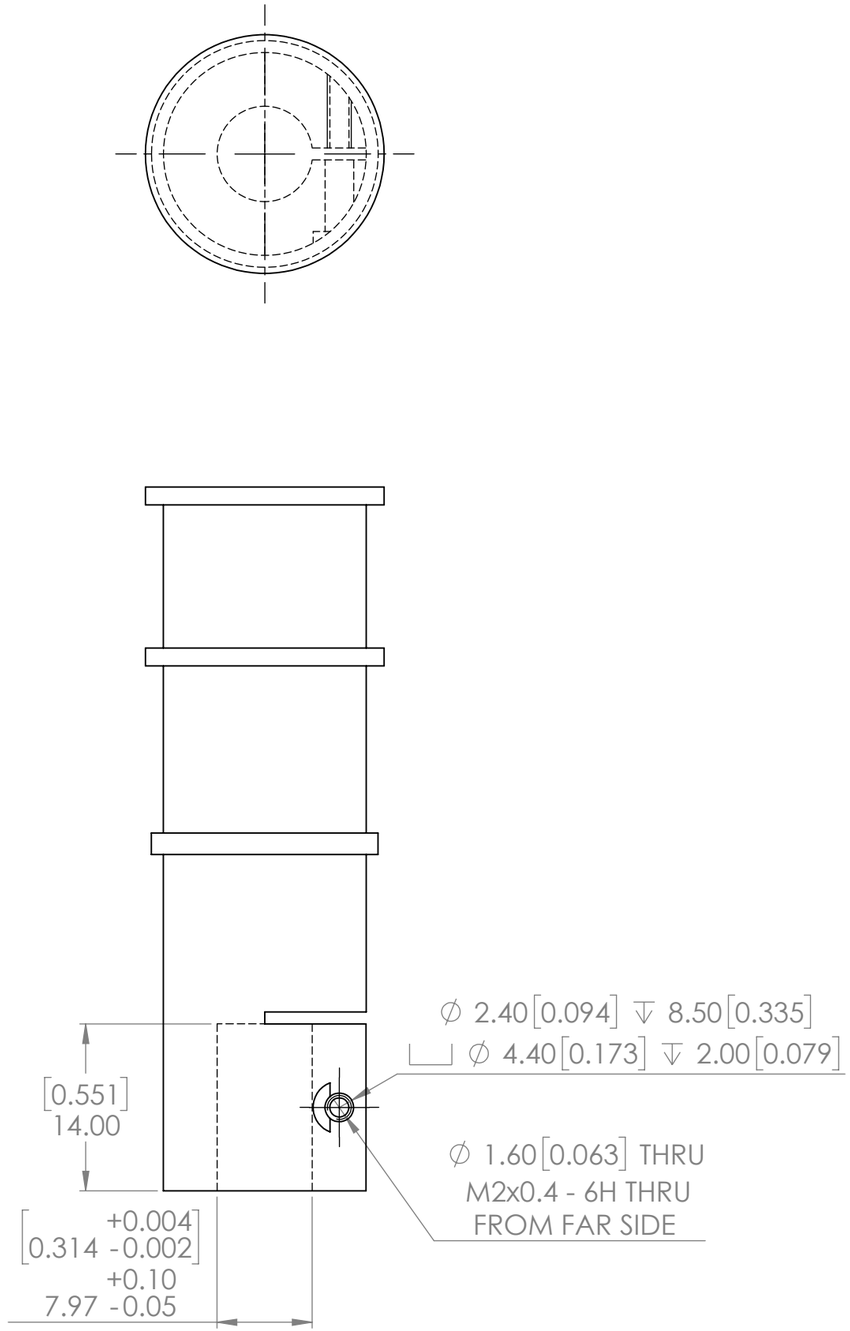

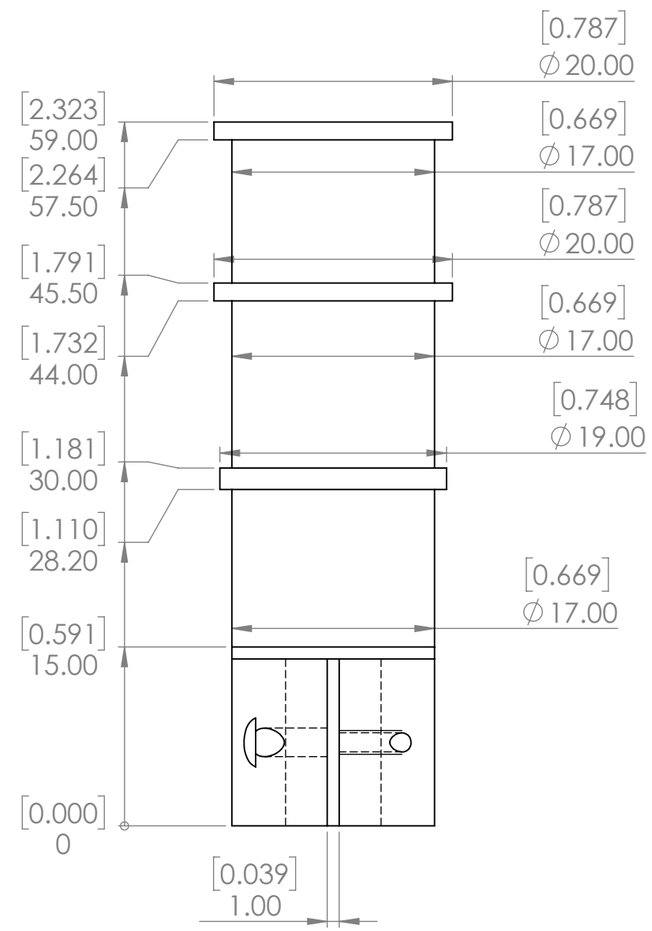

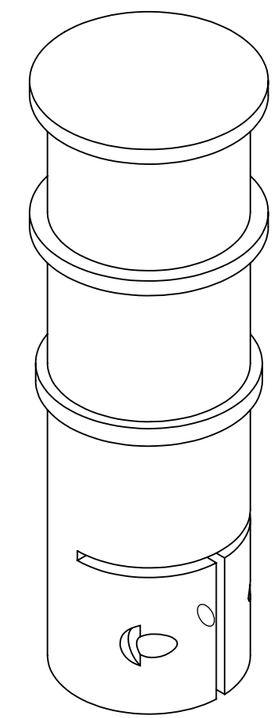

RDS Wand

Name:	MainCapstanClamp
Material:	6061 Alum.

UNLESS OTHERWISE SPECIFIED: DIMENSIONS ARE IN MILLIMETERS	All tolerances +/- 0.5 unless otherwise specified	DEBURR AND BREAK SHARP EDGES

SOLIDWORKS Educational Product. For Instructional Use Only.