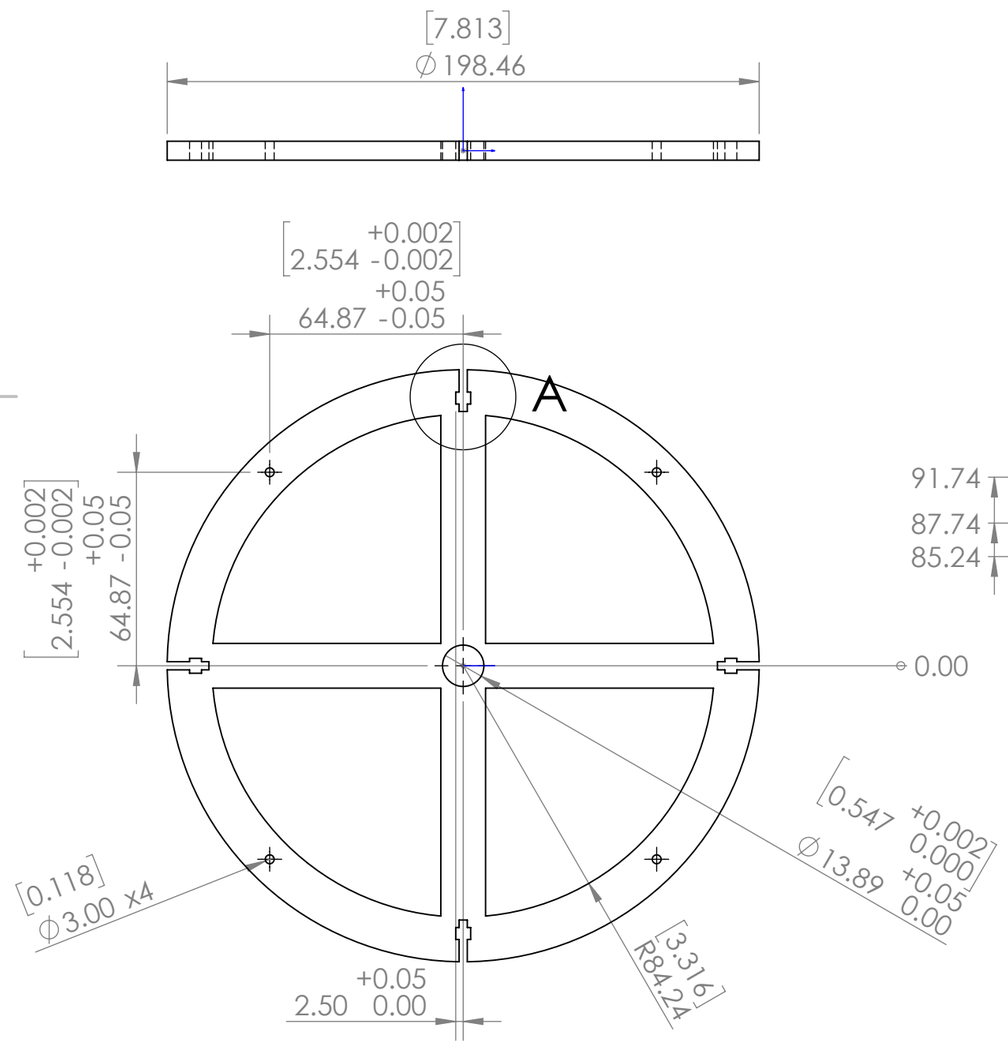

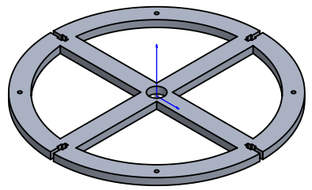

DETAIL A

SCALE 2 : 1

For Manufacturing:
Rough cutout on waterjet
Finish on Conversational Mill

RDS Wand

Name: Full Round Plate

Material: Aluminum 6061

UNLESS OTHERWISE SPECIFIED: DIMENSIONS ARE IN MILLIMETERS	All tolerances +/- 0.5 unless otherwise specified	DEBURR AND BREAK SHARP EDGES

SOLIDWORKS Educational Product. For Instructional Use Only.