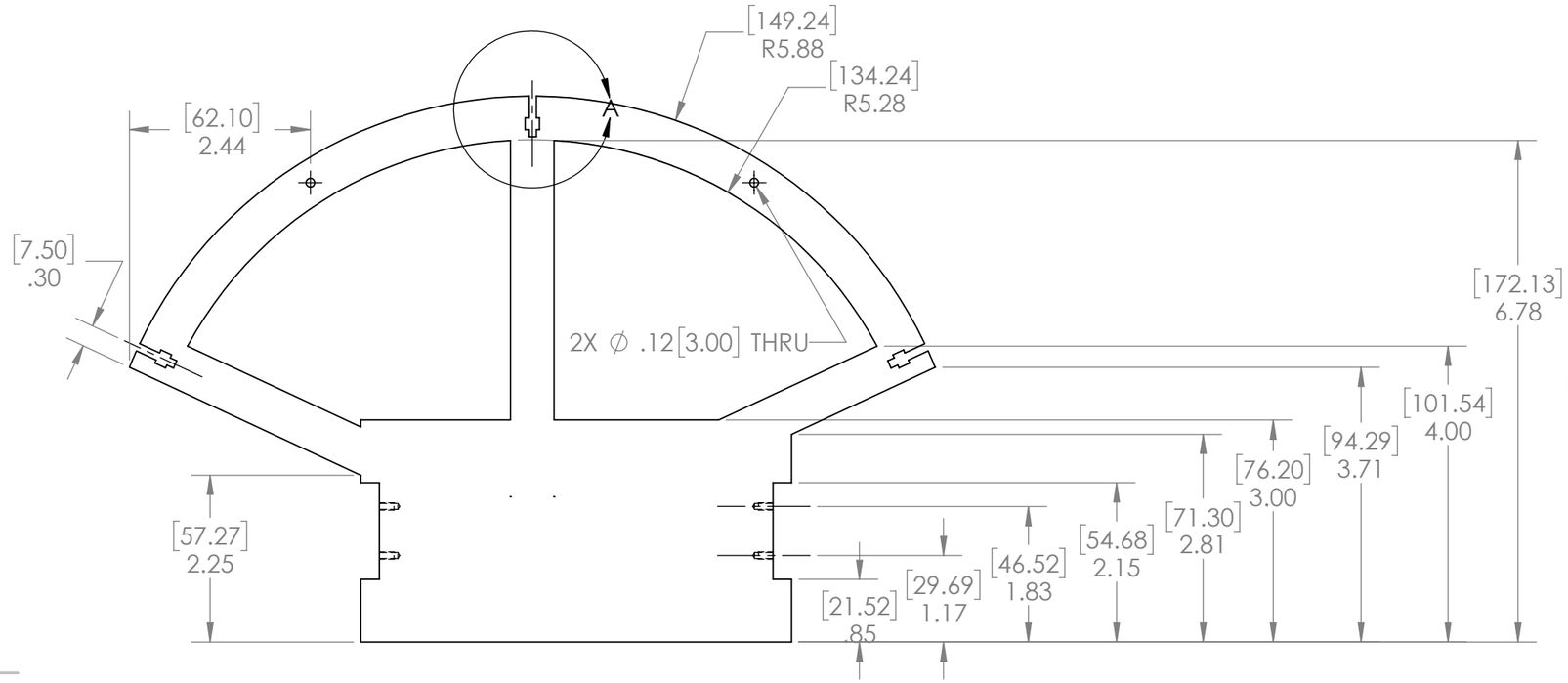

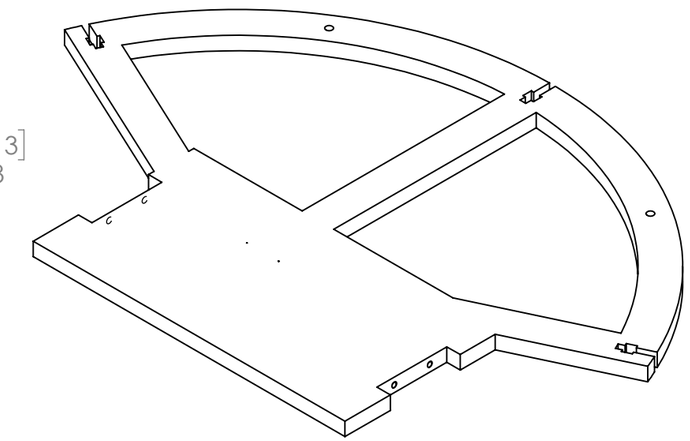

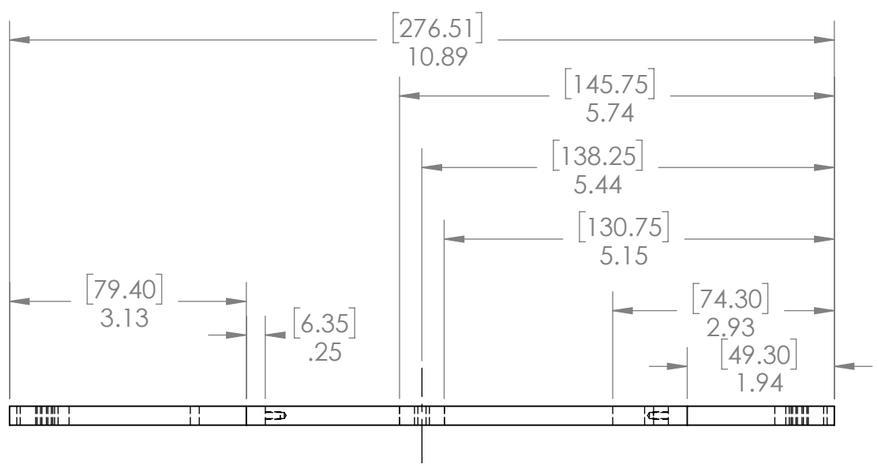

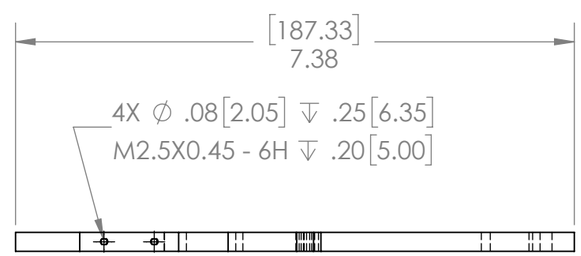

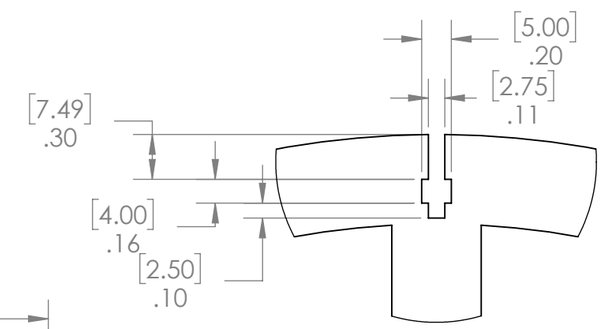

DETAIL A
SCALE 1 : 1

Name: Third Round Plate		
Material: Aluminum 6061		
UNLESS OTHERWISE SPECIFIED: DIMENSIONS ARE IN MILLIMETERS	All tolerances +/- 0.5 unless otherwise specified	DEBURR AND BREAK SHARP EDGES

SOLIDWORKS Educational Product. For Instructional Use Only.