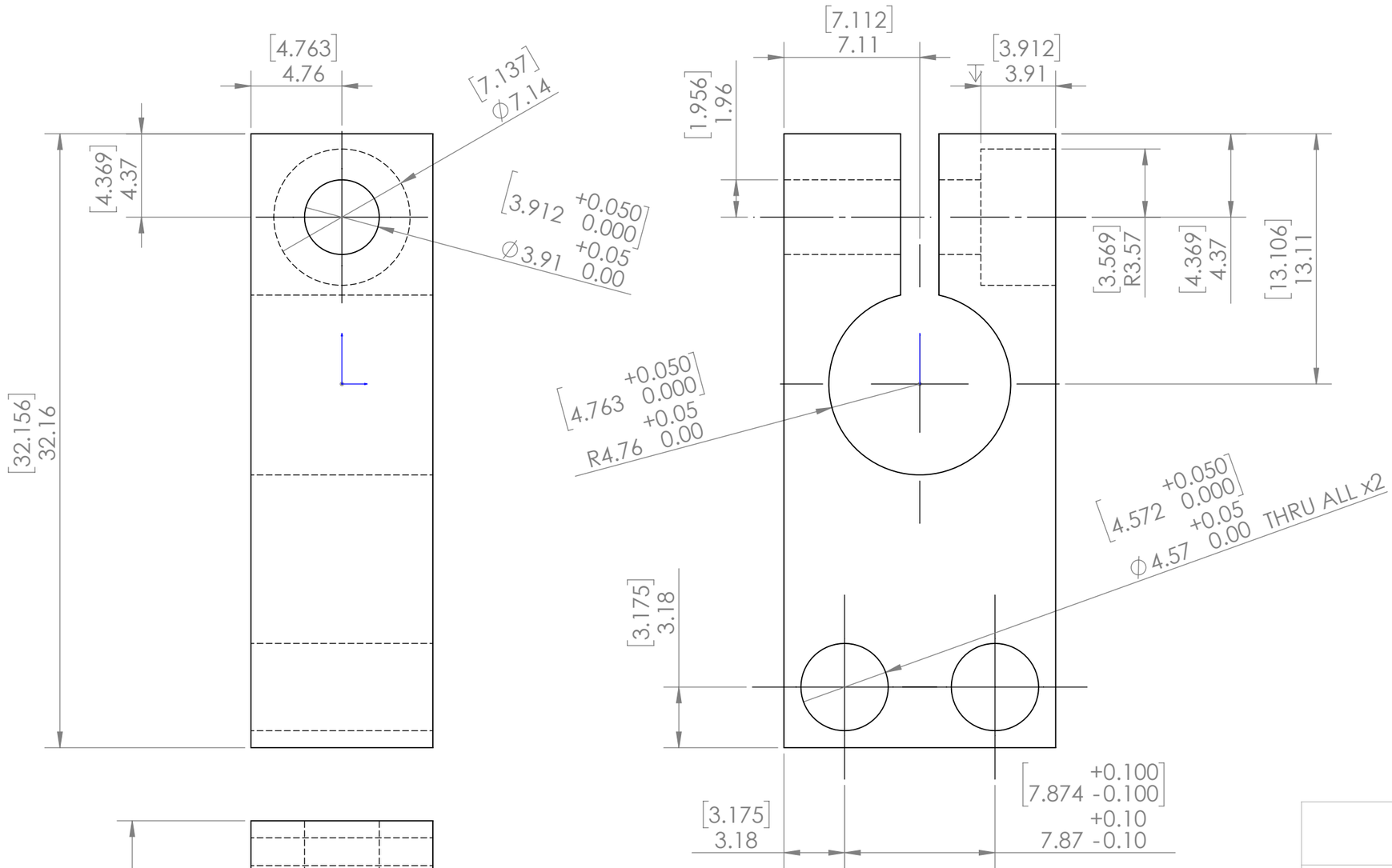

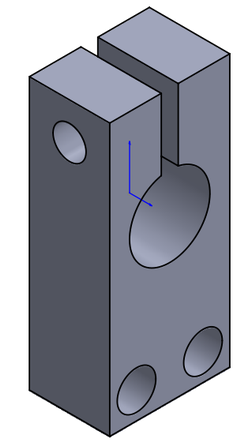

RDS Wand

Name:	SHSTA0_38
Material:	Aluminum 6061

UNLESS OTHERWISE SPECIFIED: DIMENSIONS ARE IN MILLIMETERS	All tolerances +/- 0.5 unless otherwise specified	DEBURR AND BREAK SHARP EDGES

SOLIDWORKS Educational Product. For Instructional Use Only.