WJ internal and external Features
Post process holes and bearings on Mill

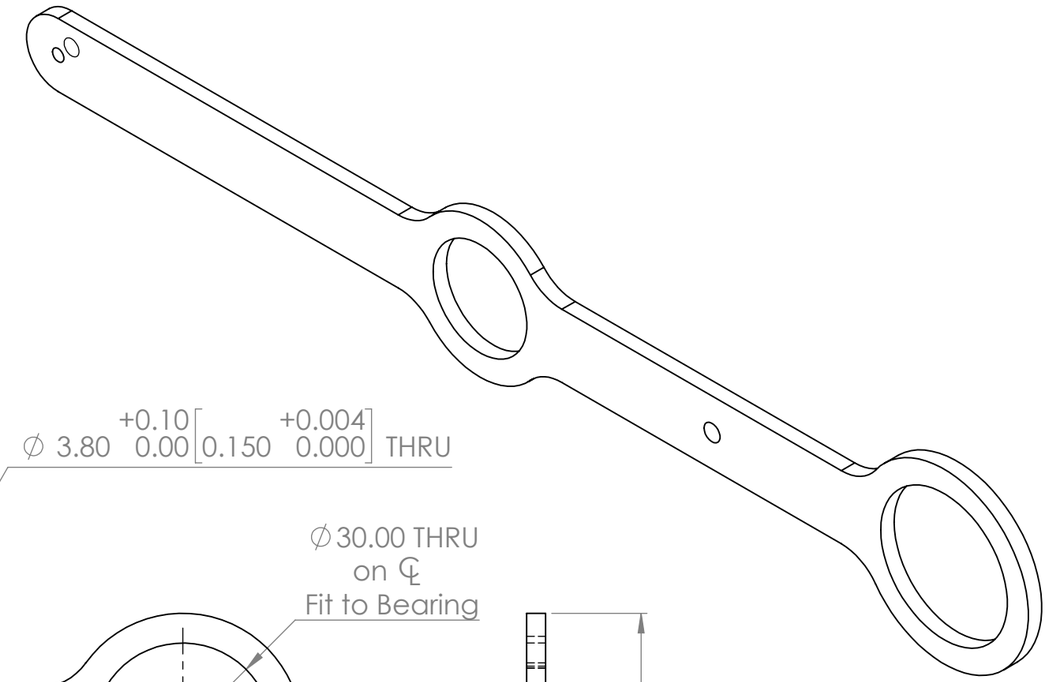

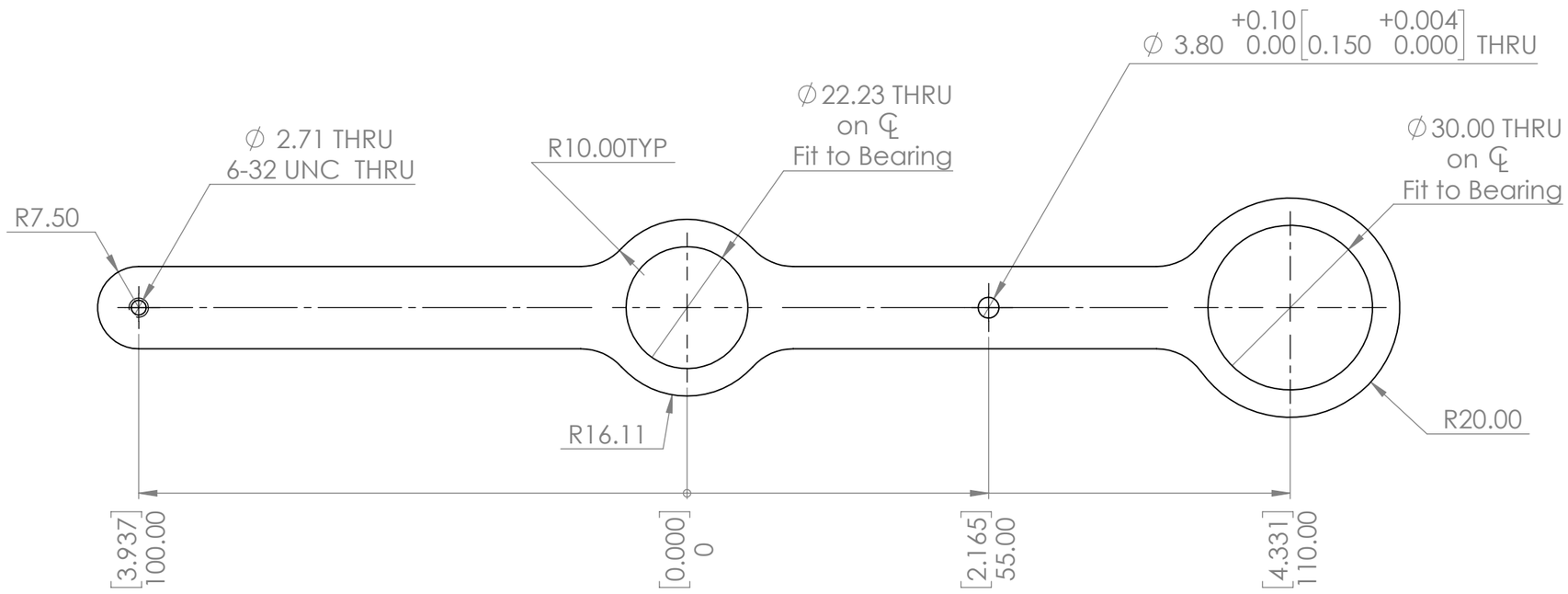

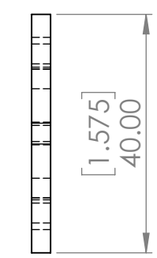

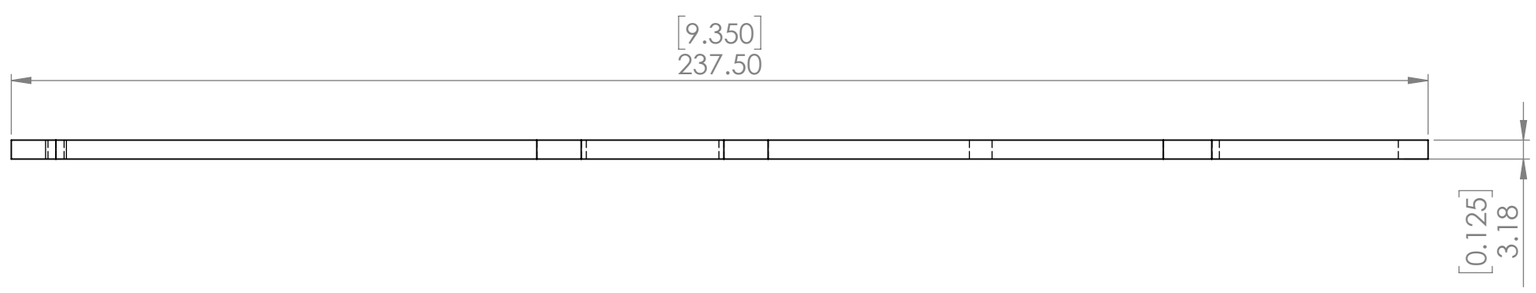

RDS Wand

Name:	SecondaryLeverBearing
Material:	6061 Alum

UNLESS OTHERWISE SPECIFIED: DIMENSIONS ARE IN MILLIMETERS	All tolerances +/- 0.5 unless otherwise specified	DEBURR AND BREAK SHARP EDGES

SOLIDWORKS Educational Product. For Instructional Use Only.