Volca Beats PCM DrumSynth MOD

Purpose

The Sequencer of the Volca Beats is great and very intuitive.
The Sounds are very flexible but they have some limitations.
I would like to add some extra layers or samples on top of these sounds. I won´t replace them, I only want to add some extra texture to them. … perhaps I would use alternative sounds to be able to use 2 different drum-soundsets with the same sequencer.

Steps

Build the ESP32 Drumsynth, all You need is a ESP32 with 4MB RAM.
The ESP32-Boards needs these free unused GPIO-Pins:
- 16 for MIDI-IN
- 25 I2S
- 26 I2S
- 27 I2S
- optional GPIO 32, 33,34, 35 for Potentiometers
- 5 Volts - Pin
- GND-Pins

A PCM5102 I2S-DAC-Board, - sometimes sold as a mini Hifi-Berry for the Raspberry-PI.
A Cap and a resistor (10K or a trimmer) to connect the Audio Out to the Volume-Pot of the Volca.
Some wires

If You plan to add 3 pots like I did, You need 3 small (linear) pots which could be mounted in the Volca Beats or You have to attach an external enclosure to it. If yes, then You´ll need some more components:
1 Diode
1 bigger capacitor around 4,7yF or so.
3 smaller caps
1 Button (taktile switch with long button)

Hook up all the wires from the ESP32 to the PCM5102 on a breadboard first.

ESP	Function	-	PCM5102 PIN
25	I2S BCLK	-	BCK
26	I2S WCLK	-	LCK
27	I2S DOUT	-	DIN
5V	5Volts	-	VIN
GND		-	GND

Some bridges have to be made on the PCM5102-Board:
3.3Volts to XMT
GND to FLT to DMP to FMT
SCL is not connected or connected to GND

Wire these 2 Modules on a breadboard

Load the Arduino Sketch into the Arduino IDE:
Comment that part of the code: ((we need 2 slashes !))
```
// #define ANALOG_INPUTS
```
Upload the Arduino Sketch to the ESP (use right COM-Port!)
Upload the samples in the data-folder via LittleFS.

Probably, You have to install LittleFS Library and the LittleFS-Tools!

Open the Volca beats and identify the 3 Pads on the board labeled:
- TX
- GND
- VD

TX is the MIDI-OUT-Pin.
Use a Solder-Iron and fix a thin isolated wire to the pad and connect it (anyhow) to PIN 16 of the ESP32
Lead a thin wire to GND and connect it to GND of the ESP32.
As the Volca uses 3.3 Volts, it matches the voltage for the ESP32-Inputs.

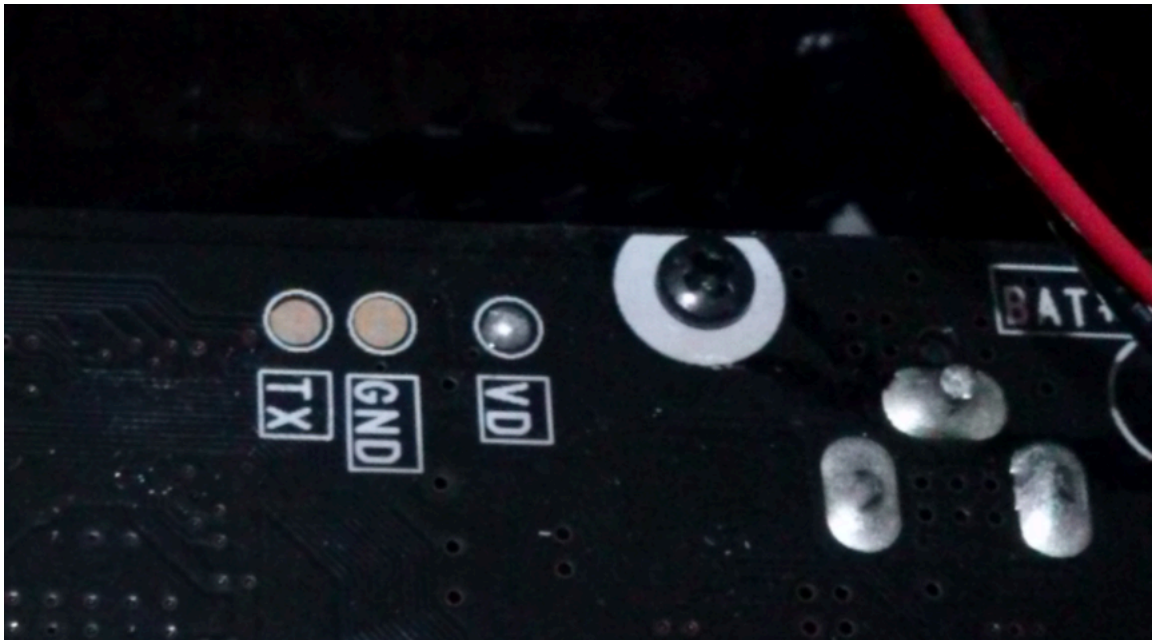

Now, Start the Volca Beats, the ESP32 should be powered up by the USB-Port of Your Computer and it should send Serial informations for debugging.

Connect the PCM5102-Audio-Out to a loudspeaker.
Start a beat on the Volca Beats.

If You could hear the sound of the ESP32, You are fine.
Some Controls of the normal Volca Surface could control the ESP32 too!!
TOM-DECAY - is TOM DECAY
CLOSED DECAY - works
OPEN DECAY - works
GRAIN - is a global Bitcrusher - You could change the CC in the MIDI_interface.ino
PCM-SPEED works the same

These knobs send MIDI-CC but I did not find some good for them:
PART LEVEL
STUTTER TIME
STUTTER DEPTH

Additional Pots

The 3 additional POTS on the 3 GPIOs are used to:

GPIO 35 FilterResonance
GPIO 34 Filter-Cutoff (it is a Bi-Filter LP or HP like on the Novation Circuit)
GPIO 33 Global Samplerate
Left pin of the Pots is connected to Ground, right pin to 2.6 Volts. (I reduced the 3.3. Volts via a simple 1N4001 Diode)

GPIO32 is connected to a Button to do Program-Changes as I had 5 different Drumsets.

Further testing

You should test with the Potentiometers, add the Pots to the installation on the breadboard. If this works, then go over to install it in the Volca Beats.

Don´t start to glue something into You Volca or drill holes into the volca before it works. Sounds to be a stupid hint, but there are people around which first drill and then figure out that it does not work.

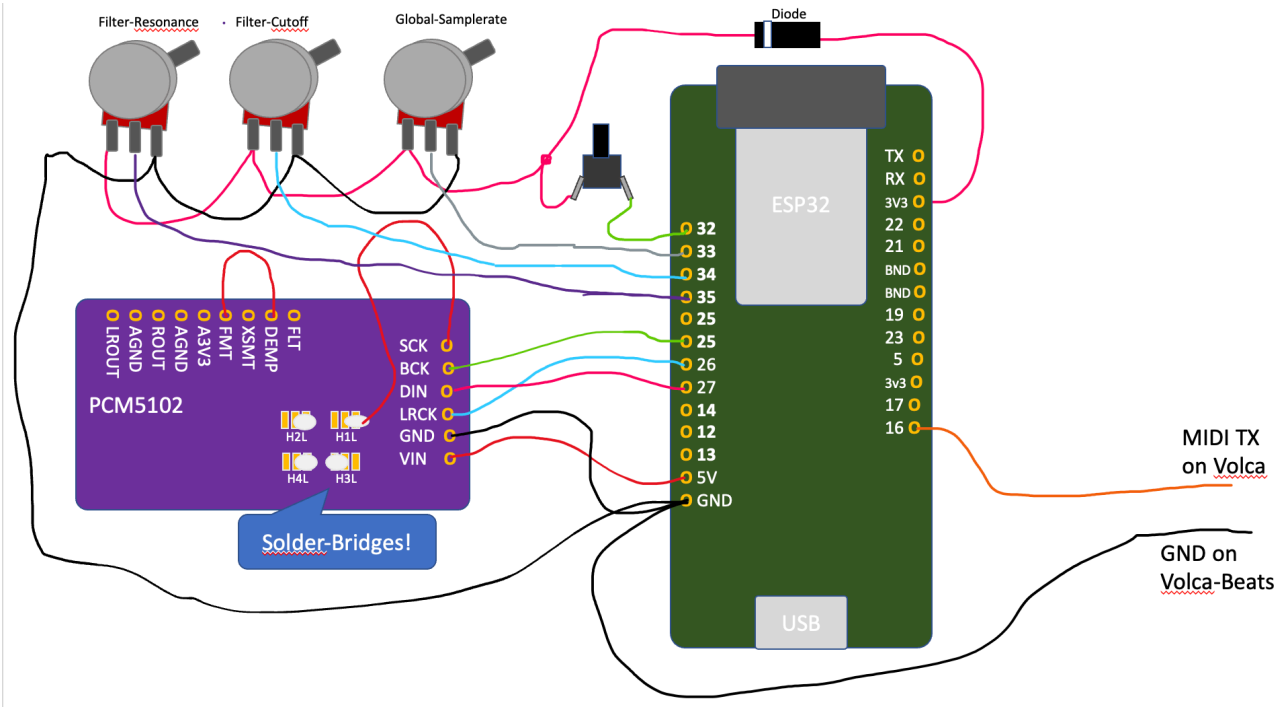

Mounting in the Volca Beats

First I searched for the right place at the bottom of the Volca Beats box where the ESP32 wouldn´t be in the way of any other regular circuit and and then I searched for a good place for the PCM5102.

I drilled 2 small holes into the box of the Volca beats to use the Audio-Output of the PCM5102 and for the USB-Port of the ESP32.

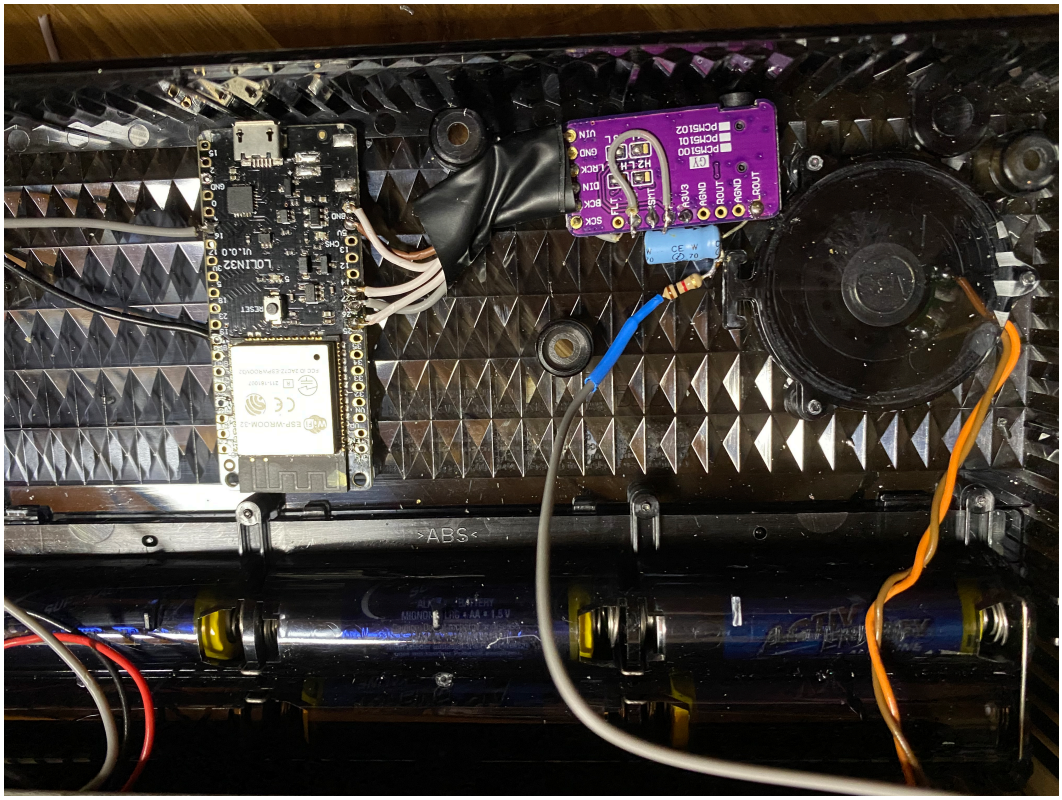

The I attached all the wires between the ESP32 (black, left) and the PCM5102 (purple, right). The wires should be flat as possible and therefore I turned the PCM5102 upside down. The gray and black wires on the left go to the GND and TX-Pads.

First testing, and if it works, lets go to the next step.

The grey Wire from the resistor at the PCM5102-board is connected to L-Out via a capacitor.

This wire goes to the Volume-Pot in the Volca Beats. It should go to the middle pin or to the PIN near to the boarder of the board.

Then I searched for acceptable positions for the 3 Pots and drilled the holes through the aluminium faceplate and bigger holes into the plastic.

All 3 Pots are lead on a stripboard to give them some physical stability. The Button for Program-Changes is mounted on the same board.

Finally I glued all Pots with hot-glue into the box.

Well - I did not check the positions for the pots in details and found some plastic in between. - bigger holes.

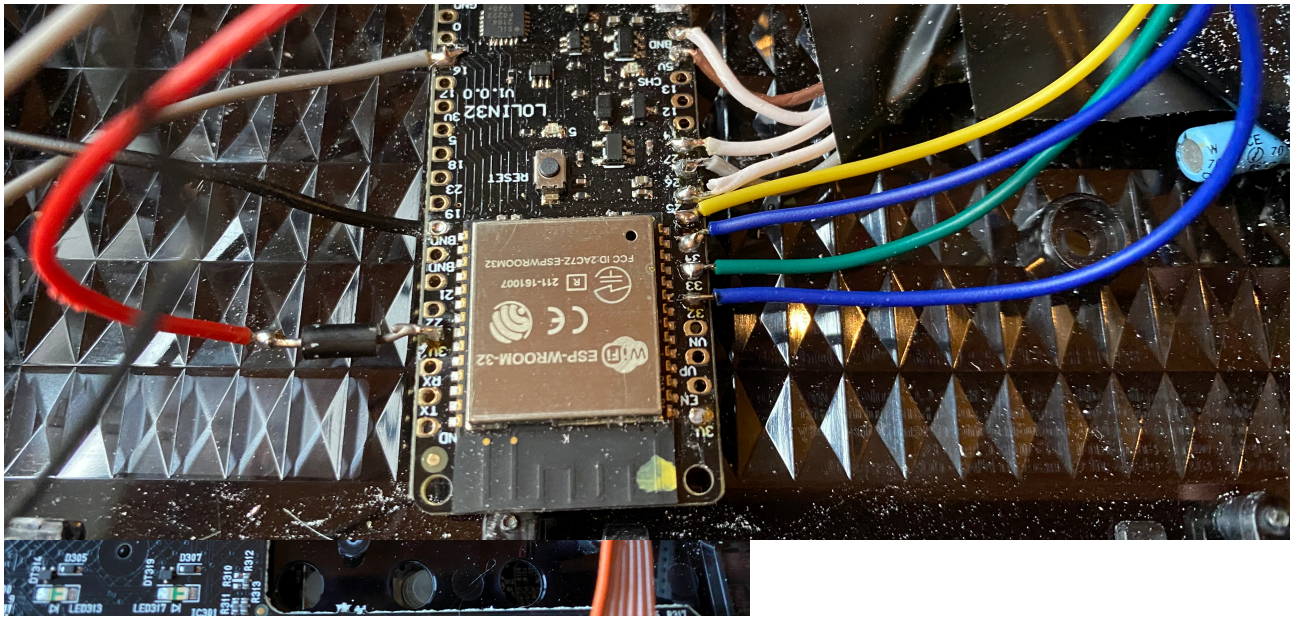

This is not really acceptable. - but done.

The wires from the MID-Pin of the Pots and from the Taktile Button have to be connected to the GPIO-Pins of the ESP32.

On the left, there goes the DIODE to a red wire - straight to the Pots. The 4 Wires on the right side are connected to the Pots.

Final

If all works, check the function of the pots one by one.

In my case, - as corona allowed me only to use spare parts, I used some log pots, which result in a bad behaviour and I had to figure out how to make them linear.

The ADC of the ESP is really a nightmare and it took me a day to find proper values.

You have to find them too.

In my case, I disabled many functions and used the serial plotter in the Arduino IDE to optimise the control-range of each pot.

Problems:

Perhaps, If You won´t kill the case of Your Volca Beats, try to build it all into an extra case - or use the existing Pots of the Volca a bit better than I did.

I had tested with Filter-Resonance controlled by STUTTER TIME and Filter-Cutoff by STUTTER DEPTH which worked well as You do not use the Sound of the Volca Beat at the same time.

I had searched for proper 5 Volts in the Volca Beats, - I found 5 Volts but it includes some strange new noises. I have to create my own 5 Volts based on the raw power. (future)

With the Taktile Switch, I could change the program but I only could hear the new sounds. A Control-LED for the Program would be better but I was not willing to drill the next holes into it.

Erich