# Full CMOS Implementation of Bidirectional Associative Memory Neural Network with Analog Memristive Synapse

Thesis Submitted for Partial Fulfillment

of the Requirements for the Award of the Degree of

**Bachelor of Technology**

in

**Electronics and Communication Engineering**

by

**Sachin Mohanty**

Roll Number: 2301180

Under the Supervision of

**Dr. Mourina Ghosh**

Department of Electronics and Communication Engineering

Indian Institute of Information Technology Guwahati

25th April, 2022

# Contents

**Certificate of Approval** **iii**

**Declaration** **iv**

**Abstract** **v**

**1 Introduction** **1**

1.1 Neuromorphic Computing . . . . . 1

1.2 From VTEAM Memristor Models to CMOS Emulation . . . . . 1

1.3 Bidirectional Associative Memory (BAM) . . . . . 3

1.4 Literature Survey . . . . . 3

1.5 Chapter Organization . . . . . 3

**2 Motivation** **4**

2.1 The Promise of Bidirectional Associative Memory . . . . . 4

2.2 The Fabrication Barrier of Physical Memristors . . . . . 5

2.3 Research Gaps in Existing Literature . . . . . 5

**3 Objective** **7**

**4 Work Done (Implementation of Full CMOS BAM)** **8**

4.1 BAM Algorithm and Weight Calculation . . . . . 8

4.2 Proposed CMOS Memristor Emulator . . . . . 9

4.3 Implementation of the BAM Crossbar . . . . . 9

4.3.1 Resolving Crossbar Loading and Voltage Sag . . . . . 10

4.4 Simulation Results . . . . . 11

**5 Conclusion and Future Work** **13**

**Bibliography** **14**

# Certificate of Approval

This is to certify that the thesis entitled **"Full CMOS Implementation of Bidirectional Associative Memory Neural Network with Analog Memristive Synapse"** submitted by **Sachin Mohanty** to Indian Institute of Information Technology, Guwahati, is a record of bona fide research work under my supervision and I consider it worthy of consideration for the award of the degree of Bachelor of Technology in Electronics and Communication Engineering at Indian Institute of Information Technology Guwahati.

[**Dr. Mourina Ghosh**]
Assistant Professor
Department of Electronics and Communication
Indian Institute of Information Technology, Guwahati
Guwahati 781001, Assam, India

# Declaration

I declare that

1. The work contained in the thesis is original and has been done by myself under the general supervision of my supervisor.
2. The work has not been submitted to any other Institute for any degree or diploma.
3. I have followed the guidelines provided by the Institute in writing the thesis.
4. I have conformed to the norms and guidelines given in the Ethical Code of Conduct of the Institute.
5. Whenever I have used materials (data, theoretical analysis, and text) from other sources, I have given due credit to them by citing them in the text of the thesis and giving their details in the references.
6. Whenever I have quoted written materials from other sources, I have put them under quotation marks and given due credit to the sources by citing them and giving required details in the references.

**Sachin Mohanty**

# Abstract

*Conventional computing architectures face severe energy and latency bottlenecks due to the physical separation of processing and memory units. Neuromorphic computing aims to bridge this gap by mimicking the biological brain's synaptic parallelism. A key component of this paradigm is the memristor, a non-volatile device whose resistance can be dynamically tuned, making it ideal for acting as an artificial synapse.*

*While theoretical frameworks like the VTEAM (Voltage ThrEshold Adaptive Memristor) model provide excellent mathematical descriptions of physical memristors, actual physical memristors are not readily available in commercial CMOS Process Design Kits (PDKs) due to fabrication complexities and device stochasticity. To overcome this, this thesis presents a fully analog 180nm CMOS implementation of a* $6 \times 6$ *Bidirectional Associative Memory (BAM) Neural Network using a highly tunable CMOS memristor emulator circuit.*

*The designed crossbar array operates in two distinct phases: a rapid high-voltage programming phase to lock synaptic weights onto internal capacitors, followed by a low-voltage inference phase for pattern recall. Significant analog design challenges, including data-dependent crossbar loading and Transimpedance Amplifier (TIA) voltage sag, were mathematically analyzed and resolved. The simulated results successfully demonstrate the accurate bidirectional recall of Tetris-like spatial patterns, validating the first fully fabricatable CMOS-only BAM architecture.*

# Chapter 1

# Introduction

## 1.1 Neuromorphic Computing

Conventional computing systems operate on the Von Neumann architecture, which enforces a strict physical separation between the Central Processing Unit (CPU) and memory. This division dictates that data must be continuously shuttled back and forth during computation. This transit creates the "Von Neumann Bottleneck," leading to high latency and massive energy consumption. Modern Artificial Intelligence (AI) accelerators require Kilowatts to Megawatts of power to execute matrix multiplications. In stark contrast, the human brain performs highly complex pattern recognition and cognitive tasks using approximately 20 Watts.

Neuromorphic computing seeks to replicate this biological efficiency by designing hardware that mimics the physical structure of the brain. In these systems, memory and computation are intrinsically integrated at the site of the artificial synapse, enabling massive, event-driven parallelism.

## 1.2 From VTEAM Memristor Models to CMOS Emulation

The memristor, theoretically postulated by Leon Chua in 1971 and physically demonstrated by HP Labs in 2008, is the fourth fundamental circuit element. Its defining characteristic is non-volatility; its resistance state depends on the history of charge that has flowed through it.

To simulate memristive networks, researchers rely on mathematical SPICE models, the most prominent being the **VTEAM (Voltage ThrEshold Adaptive Memristor)** model. The VTEAM model accurately captures the current-voltage pinched hysteresis loop (as illustrated in Figure 1.1) and the threshold voltage switching behavior of physical resistive RAM (ReRAM) devices.

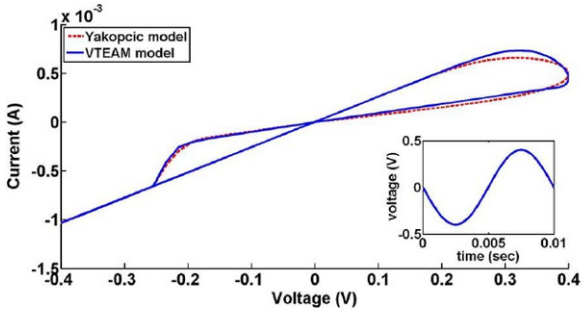


Figure 1.1: Typical pinched hysteresis loop representing the current-voltage characteristic of a memristor.

The mathematical or theoretical structure of the VTEAM model is depicted in Figure 1.2. However, the VTEAM model represents an ideal, or specific experimental device. Physical memristors suffer from cycle-to-cycle stochasticity and are currently unavailable in standard commercial foundries (like SCL 180nm CMOS).

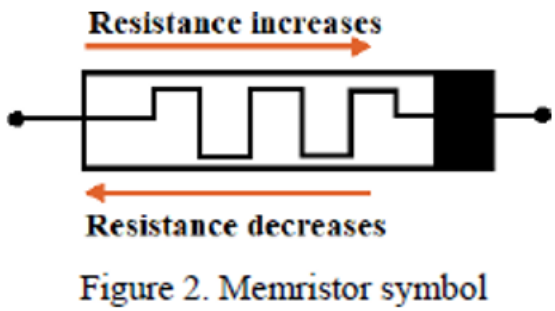


Figure 1.2: Equivalent structure of the Voltage ThrEshold Adaptive Memristor (VTEAM) model.

Because we cannot physically fabricate VTEAM memristors using standard CMOS processes, a critical shift is required: transitioning from theoretical memristor SPICE models to **CMOS Memristor Emulators**. These analog circuits replicate the tunable conductance and non-volatile memory of a memristor while utilizing standard, reliable CMOS transistors.

## 1.3 Bidirectional Associative Memory (BAM)

Bidirectional Associative Memory (BAM), introduced by Bart Kosko, is a two-layer recurrent neural network capable of bidirectional pattern recall. Given an input pattern at the X-layer, the network reverberates to produce an associated pattern at the Y-layer, and vice versa. Implementing BAM requires a crossbar array of synapses capable of storing positive, negative, and zero weights, making the CMOS memristor emulator an ideal candidate for its physical realization.

## 1.4 Literature Survey

Several approaches have been proposed for neuromorphic pattern recognition:

- **Zhao et al. (2017):** Demonstrated a BAM network using a memristor SPICE model. However, the design relied purely on mathematical models that cannot be fabricated in standard CMOS.
- **Shi & Zeng (2020):** Proposed an in-situ learning BAM neural network, but again relied solely on theoretical SPICE models, neglecting physical circuit limitations.
- **Saxena (2019):** Proposed a compact CMOS memristor emulator circuit, but applied it primarily to generic memcomputing logic rather than a full associative memory network.

## 1.5 Chapter Organization

The remainder of this thesis is organized as follows: Chapter 2 describes the motivation and research gaps. Chapter 3 outlines the specific objectives. Chapter 4 details the proposed CMOS emulator, the BAM crossbar design, analog troubleshooting, and simulation results. Chapter 5 concludes the thesis with a discussion on future work.

# Chapter 2

# Motivation

The transition from conventional digital hardware to analog neuromorphic crossbars is driven by the dire need for energy-efficient AI processing. While the theoretical concept of mapping neural network weights to memristive conductances ($G = I/V$) is mathematically sound via Ohm's and Kirchhoff's laws, practical silicon implementation lags significantly behind algorithmic theory.

## 2.1 The Promise of Bidirectional Associative Memory

The human brain is remarkably adept at associative recall—recognizing a complete face from a partial glimpse, or linking a visual image with a spoken name. In artificial neural networks, Bidirectional Associative Memory (BAM) replicates this behavior. However, executing BAM in a traditional digital processor requires iterative memory fetches and highly sequential Multiply-Accumulate (MAC) operations, which are computationally expensive. Moving this architecture to an analog crossbar allows the MAC operations to occur instantaneously (in $O(1)$ time) simply by summing currents across wires. Therefore, constructing a physical BAM crossbar represents a massive leap in low-power pattern recognition capabilities.

## 2.2 The Fabrication Barrier of Physical Memristors

Although resistive RAM (ReRAM) and phase-change memory (PCM) devices have been physically demonstrated, utilizing them in academic or commercial integrated circuit designs remains a profound challenge. Physical memristors require complex fabrication steps involving exotic metal-oxide layers (e.g., $TiO_2$, $HfO_2$) that are incompatible with standard CMOS process flows like the Semiconductor Laboratory (SCL) 180nm node.

Furthermore, current physical memristors are hindered by inherent device stochasticity, high initial forming voltages, and poor endurance. This creates a critical need for **CMOS Memristor Emulators**—circuits that replicate the highly desirable tunable plasticity of a memristor while relying entirely on mature, predictable, and easily fabricatable MOSFETs.

## 2.3 Research Gaps in Existing Literature

A thorough review of existing literature reveals a glaring disconnect between theoretical circuit design and practical analog reality, highlighting several research gaps:

1. **Over-reliance on Theoretical SPICE Models:** Most existing works on BAM assume the availability of ideal physical memristors modeled by mathematical equations like the VTEAM model. These models assume perfect threshold switching and infinite retention. When researchers attempt to transition these mathematical arrays to silicon, parasitic resistances and variability cause the networks to fail.

2. **Absence of Robust CMOS Emulators in Network Contexts:** While some CMOS emulator circuits have been proposed, they are typically simulated in isolation. There is a lack of fully fabricatable implementations where multiple emulators are successfully integrated into a densely packed, operational $6 \times 6$ crossbar matrix.

3. **Neglect of Analog Non-Idealities and Crossbar Loading:** Crossbar arrays fundamentally sum currents along column wires. Theoretical papers frequently ignore the severe electrical loading effects this current summation has on the output read circuitry. For instance, depending on the stored input pattern, a column may draw an unexpectedly high amount of current, which can overwhelm the Transimpedance Amplifier (TIA). This causes the virtual ground to collapse, leading to severe output voltage sag and logic-level corruption.

The motivation of this project is to address these gaps directly. By discarding theoretical physical memristors in favor of a robust analog 180nm CMOS emulator, and by designing a crossbar architecture that explicitly resolves heavy current loading and TIA saturation issues, this work aims to prove that stable associative memory can be achieved using strictly standard CMOS technology.

# Chapter 3

# Objective

The primary objective of this work is to bridge the gap between theoretical memristor mathematics (such as VTEAM models) and physical analog CMOS fabrication. The specific objectives are defined as follows:

- **Objective 1:** Design a completely analog, tunable CMOS memristor emulator in 180nm technology that allows for non-volatile weight storage using a capacitor-held gate voltage.
- **Objective 2:** Construct a full $6 \times 6$ Bidirectional Associative Memory (BAM) crossbar array capable of bidirectional data flow and current summation.
- **Objective 3:** Identify and resolve analog Transimpedance Amplifier (TIA) loading and voltage sag issues to ensure stable logic-level outputs during the inference phase.
- **Objective 4:** Demonstrate successful pattern learning and bidirectional recall of distinct spatial patterns via Cadence Virtuoso transient simulations.

# Chapter 4

# Work Done (Implementation of Full CMOS BAM)

## 4.1 BAM Algorithm and Weight Calculation

The BAM network consists of an X-layer and a Y-layer, fully connected via a weight matrix $W$. The logical weight matrix is generated using the Hebbian learning rule, summing the outer products of the input ($X$) and target ($Y$) bipolar pattern pairs (where pixels are $+1$ or $-1$):

$$W = \sum_{k=1}^{M} X_k^T Y_k \tag{4.1}$$

For $M = 3$ training patterns, the logical weights range strictly within $W_{jk} \in \{-3, -1, +1, +3\}$. To map these logical weights to physical hardware, they are converted to synaptic conductances ($G_{jk}$):

$$G_{jk} = G_s - \frac{W_{jk}}{R_0} \tag{4.2}$$

where $G_s$ is the base synaptic conductance (1/89.2k$\Omega$) and $R_0$ is the TIA feedback resistor (1.414 M$\Omega$). This maps the logical weights to specific target voltages ($V_{target}$) ranging from 584mV to 970mV.

## 4.2 Proposed CMOS Memristor Emulator

To emulate the memristor in standard CMOS, a tunable resistance circuit is proposed. The core of the emulator is an NMOS transistor (M1) operating in the deep triode region. Its conductance is defined as:

$$G = K_n \frac{W}{L}(V_{GS} - V_{CM} - V_{Tn}) \tag{4.3}$$

A 10pF capacitor ($C_m$) is utilized to store the gate voltage. During the programming phase (0 to 5$\mu$s), an uncompensated comparator evaluates the stored capacitor voltage against $V_{target}$. A complementary transmission gate connects a current source to $C_m$. Once the capacitor charges precisely to $V_{target}$, the comparator flips, turning off the switch and locking the analog weight non-volatilely. A level shifter adds a constant offset ($V_{CM}$) to ensure the transistor remains in the correct operating region. The schematic for this proposed emulator circuit is shown in Figure 4.1.

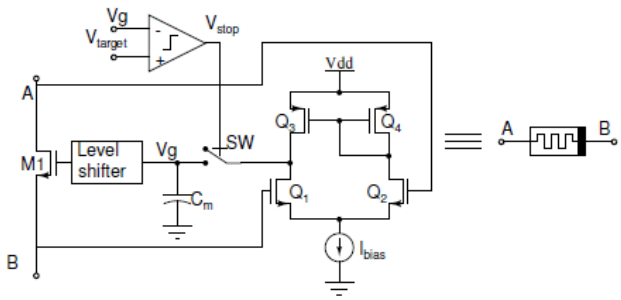


Figure 4.1: Schematic of the proposed CMOS memristor emulator highlighting the deep-triode NMOS, storage capacitor, and programming comparator.

## 4.3 Implementation of the BAM Crossbar

The emulators were arranged in a 6×6 crossbar layout. The output of each column is fed into an inverting Transimpedance Amplifier (TIA) constructed using a two-stage Operational Transconductance Amplifier (OTA). The TIA acts as a virtual ground, pulling the summed column currents and converting them to an output voltage.

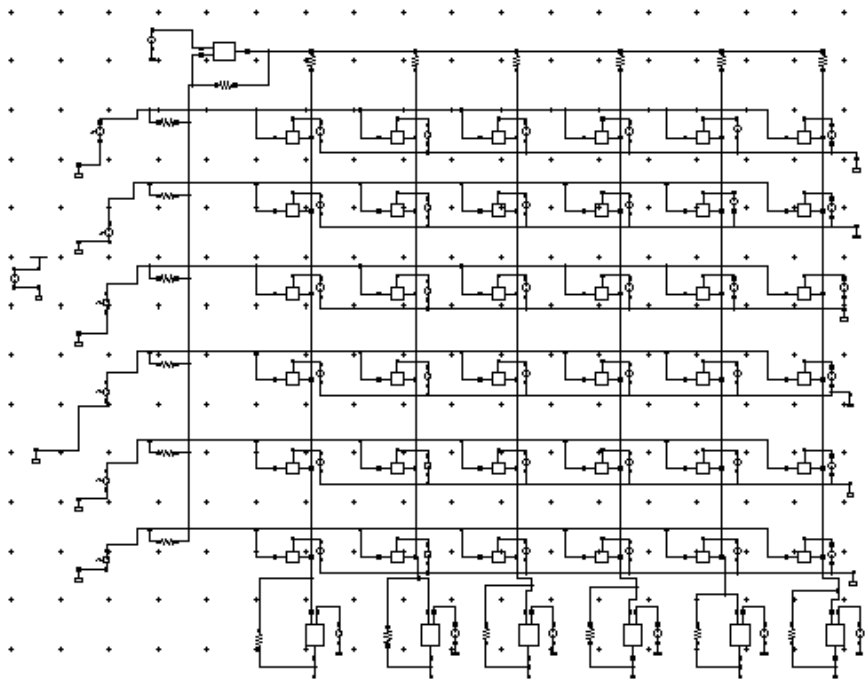

Figure 4.2: Full Analog Implementation of the $6 \times 6$ BAM Crossbar in Cadence Virtuoso.

### 4.3.1 Resolving Crossbar Loading and Voltage Sag

A significant challenge was encountered during the read/inference phase (10 $\mu$s to 40 $\mu$s). Heavily loaded columns (such as $vo_6$) experienced severe voltage sag, dropping to 813mV instead of reaching the required logic HIGH threshold ($> 1V$). This occurred because the finite open-loop gain of the OTA could not sink the massive accumulated current, causing the virtual ground to collapse.

This architectural flaw was resolved through a two-fold optimization:

1. **Boosting OTA Drive Strength:** The OTA tail current was doubled, and the second-stage PMOS width was increased to $4\mu m$ to prevent output saturation.

2. **Squeezing the Read Window:** The non-inverting bias voltage ($V_{bias}$) of the TIA was carefully shifted up. This reduced the $V_{read} - V_{bias}$ potential difference across the emulators, physically lowering the maximum current load and preventing the OTA from falling out of its linear region.

## 4.4 Simulation Results

The entire network was simulated using SCL 180nm CMOS models in Cadence Virtuoso. The transient response was simulated over a 40$\mu$s window. The network successfully demonstrated a programming phase (0-5$\mu$s) where weights were locked, followed by an inference phase.

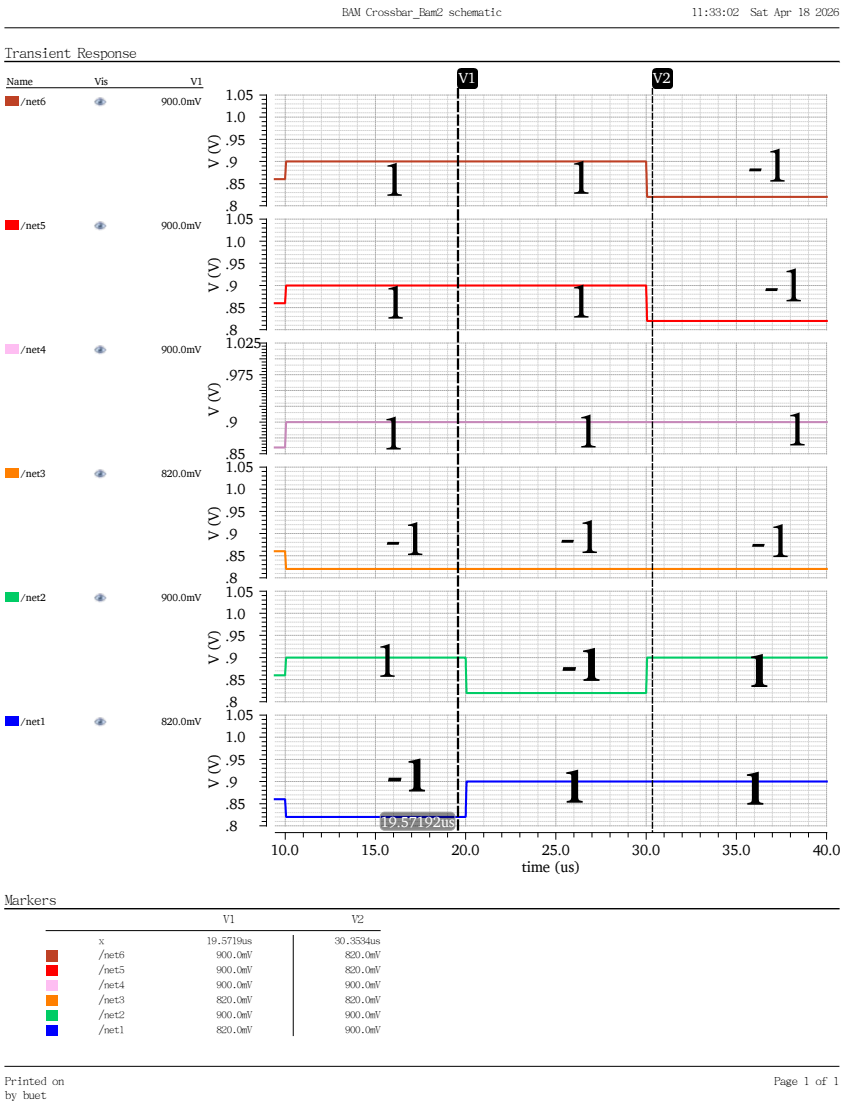


Figure 4.3: Input Pattern A pulses applied to the X-layer of the BAM crossbar.

As shown in Figures 4.3 and 4.4, an input pattern A was applied, and the network successfully output the exact expected associated Pattern B, proving the functionality of the CMOS associative memory.

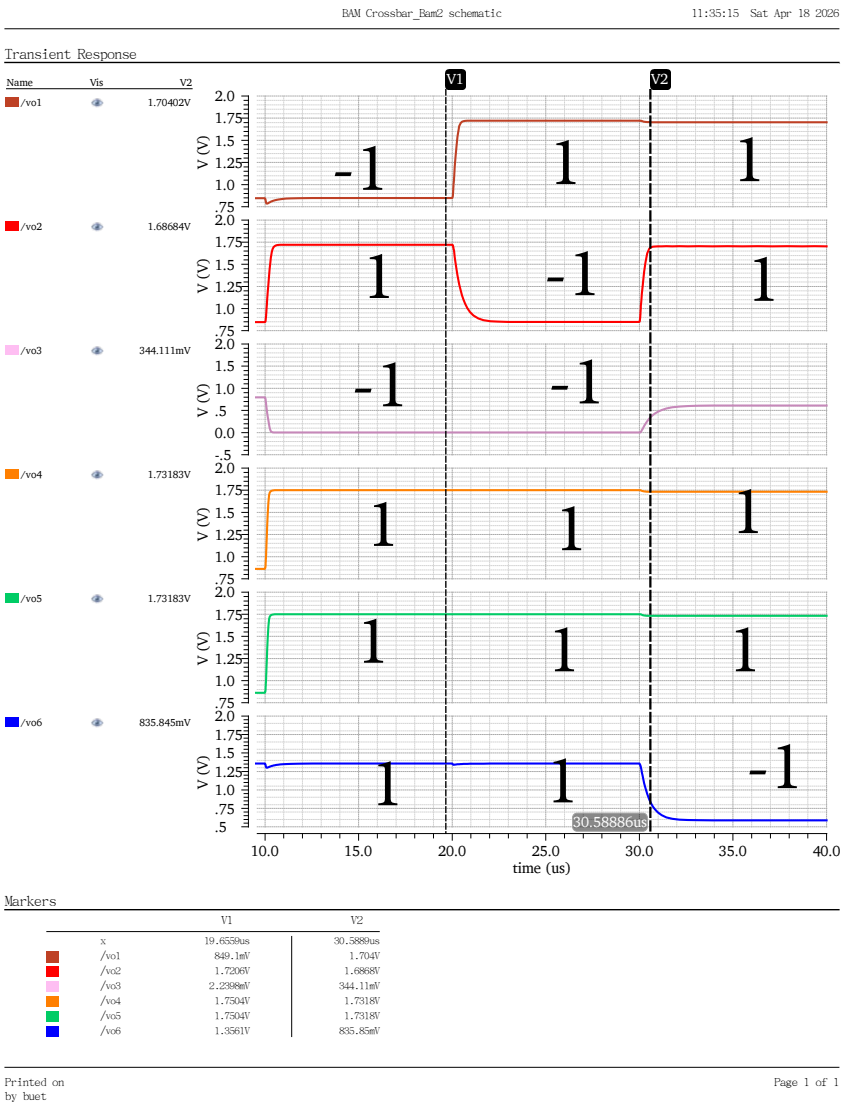


Figure 4.4: Output Recalled Pattern B showing distinct logic thresholds ($+1 > 1V$ and $-1 < 1V$) after resolving TIA voltage sag.

# Chapter 5

# Conclusion and Future Work

The Bidirectional Associative Memory (BAM) model was successfully realized and stabilized using standard 180nm CMOS technology. By substituting theoretical physical memristors (like those modeled by VTEAM) with highly tunable analog CMOS emulators, the system can be fabricated in standard commercial foundries. By carefully managing the analog parameters—specifically the transimpedance feedback loop, current mirroring, and crossbar loading—the circuit accurately mimics spatio-temporal synaptic behavior, allowing for rapid weight programming ($< 5\mu s$) and stable pattern recall.

## Future Work

Future iterations of this project will focus on the physical layout design and post-layout simulations to verify performance against physical parasitic capacitances. Additionally, extending the network size to $24 \times 24$ arrays for complex image recognition, and implementing on-chip Spike-Timing-Dependent Plasticity (STDP) circuits for autonomous, unsupervised learning, will bring the framework closer to true biological brain function.

# Bibliography


[1] L. Chua, "Memristor-the missing circuit element," *IEEE Trans. Circuit Theory*, vol. 18, no. 5, pp. 507–519, 1971.

[2] R. S. Williams, "How We Found The Missing Memristor," *IEEE Spectrum*, vol. 45, no. 12, pp. 28–35, 2008.

[3] S. K. Vohra, S. Thomas, M. Sakare, D. M. Das, "Full CMOS Implementation of Bidirectional Associative Memory Neural Network with Analog Memristive Synapse," *IEEE MWSCAS*, pp. 445–448, 2021.

[4] P. Kumar, R. K. Ranjan, S.-M. Kang, "Memristor-Emulating-Integrate-and-Fire Neuron-Based Fully Neuromorphic Framework for Pattern Recognition," *IEEE Trans. Circuits and Systems II*, vol. 71, no. 12, pp. 5024-5028, 2024.

[5] S. N. Truong, K. Min, "New memristor-based crossbar array architecture with 50% area reduction," *J. Semiconductor Technol. Sci.*, vol. 14, no. 3, pp. 356–363, 2014.

[6] V. Saxena, "A compact CMOS memristor emulator circuit and its applications," *IEEE MWSCAS*, pp. 190–193, 2019.