Pattern Memory Recognition using Memristive Integrator and Fire (MIF) Circuits

OTA-Based Implementation in 180nm CMOS

Sachin Mohanty
Under the Guidance of: **Dr. Mourina Ghose**

Department of Electronics and Communication Engineering
Indian Institute of Information Technology Guwahati

March 11, 2026

Project Overview

- **Objective:** Implementation of a Bio-inspired Neuromorphic system for spatial pattern recognition (Letters 'C' and 'L').
- **Motivation:** Moving beyond Von-Neumann bottlenecks by implementing "In-Memory" computing architectures.
- **Core Technology:** Utilizing **Memristors** as non-volatile synaptic weights to store learned patterns.
- **Input Method:** Direct parallel voltage excitation of the pixel grid to evaluate matching and mismatching states.

Operational Transconductance Amplifier (OTA)

- **Functionality:** Converts differential input voltage to a proportional output current ($I = g_m \Delta V$).
- **Design in 180nm:** Optimized for high output impedance to act as an ideal current source for the Memristor state change.
- **Linearity:** The g_m is designed to be stable across the operating range to ensure uniform synaptic weighting.
- **Programmability:** Used to drive the SET/RESET currents required to transition memristors between HRS and LRS.

OTA: Symbol and Schematic

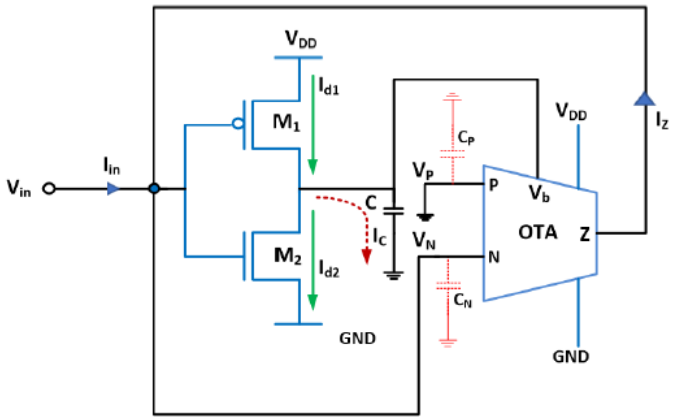

Fig. 3. Grounded memristor emulator topology.

Figure: OTA Symbol

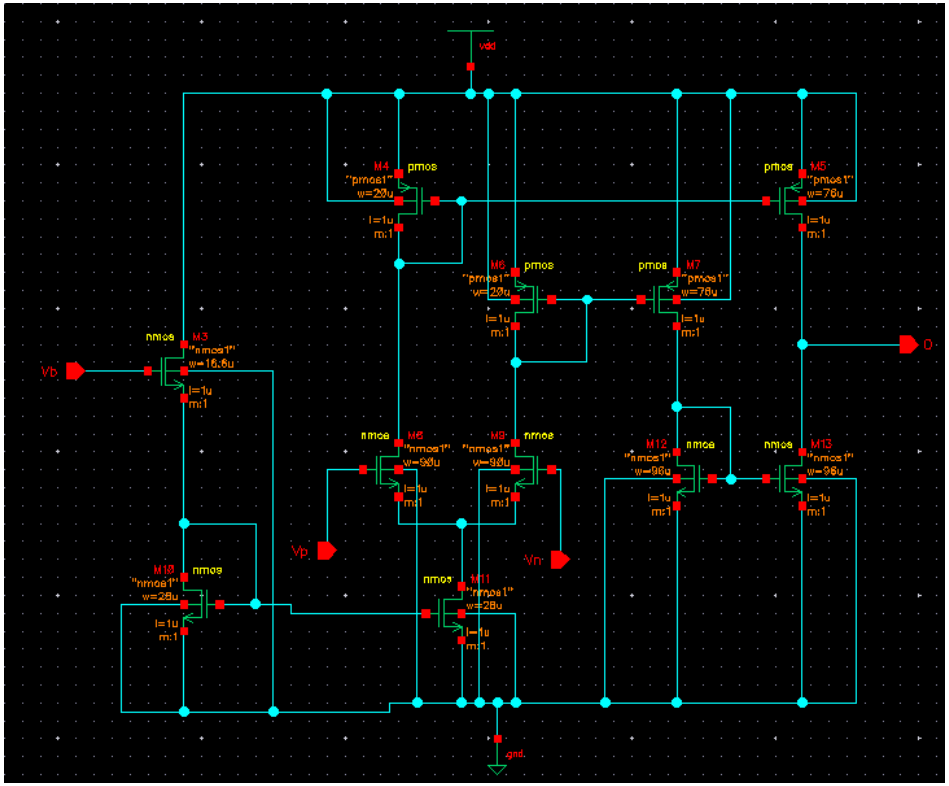

Figure: CMOS Implementation

The MIF Cell: How it Works

- **Neural Mimicry:** Functions as a Leaky Integrator-and-Fire (LIF) neuron model.
- **Integration:** The input current (weighted by memristor conductance G_{mem}) charges the membrane capacitor (C_{mem}).
- **Thresholding:** When the potential across the capacitor crosses V_{th}, a spike is generated, signifying a "pattern match."
- **Governing Equation:**

$$V_{state}(t) = \frac{1}{C} \int (V_{in} \cdot G_{mem})\, dt$$

MIF: Architecture and Logic

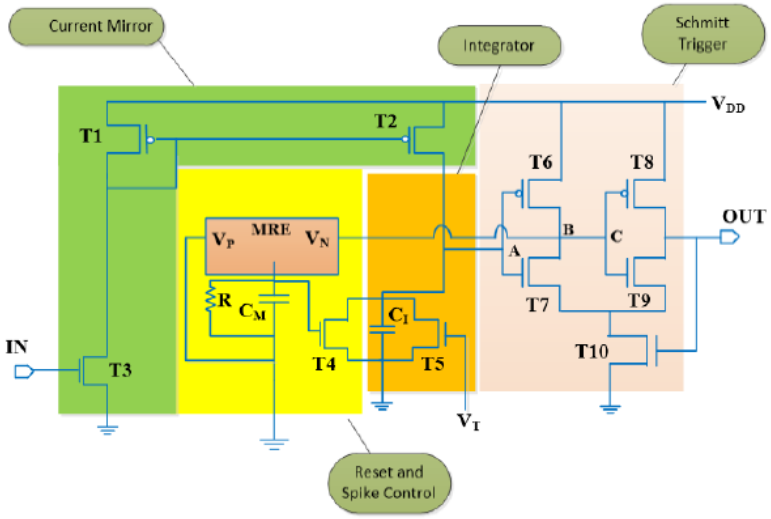

Figure: MIF Logic

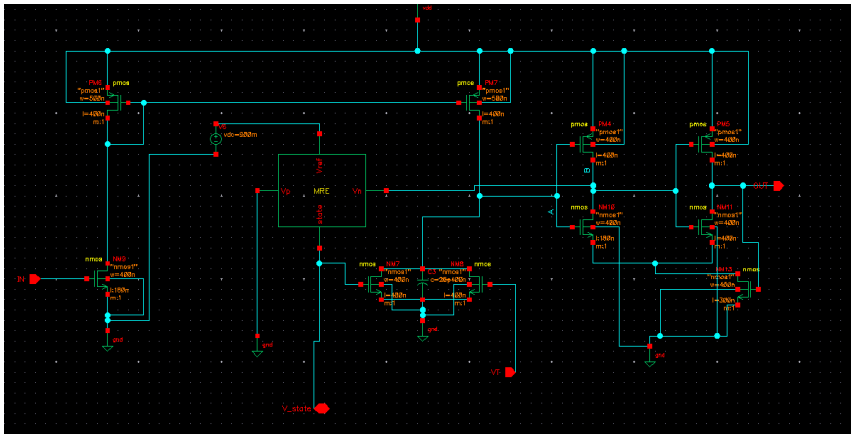

Figure: Signal Flow

Pattern Formation and Recognition

- **Grid Encoding:** A spatial pixel array (e.g., 4×3) represents the character.
- **Training Phase:** Memristors for the shape 'C' are programmed to **LRS** (Low Resistance State), others to **HRS**.
- **Recognition Logic:**
  - **Match:** Input aligns with LRS pixels $\rightarrow$ High current $\rightarrow$ Fire.
  - **Mismatch:** Input aligns with HRS pixels $\rightarrow$ Low current $\rightarrow$ No Output.

Pattern Mapping and System Schematic

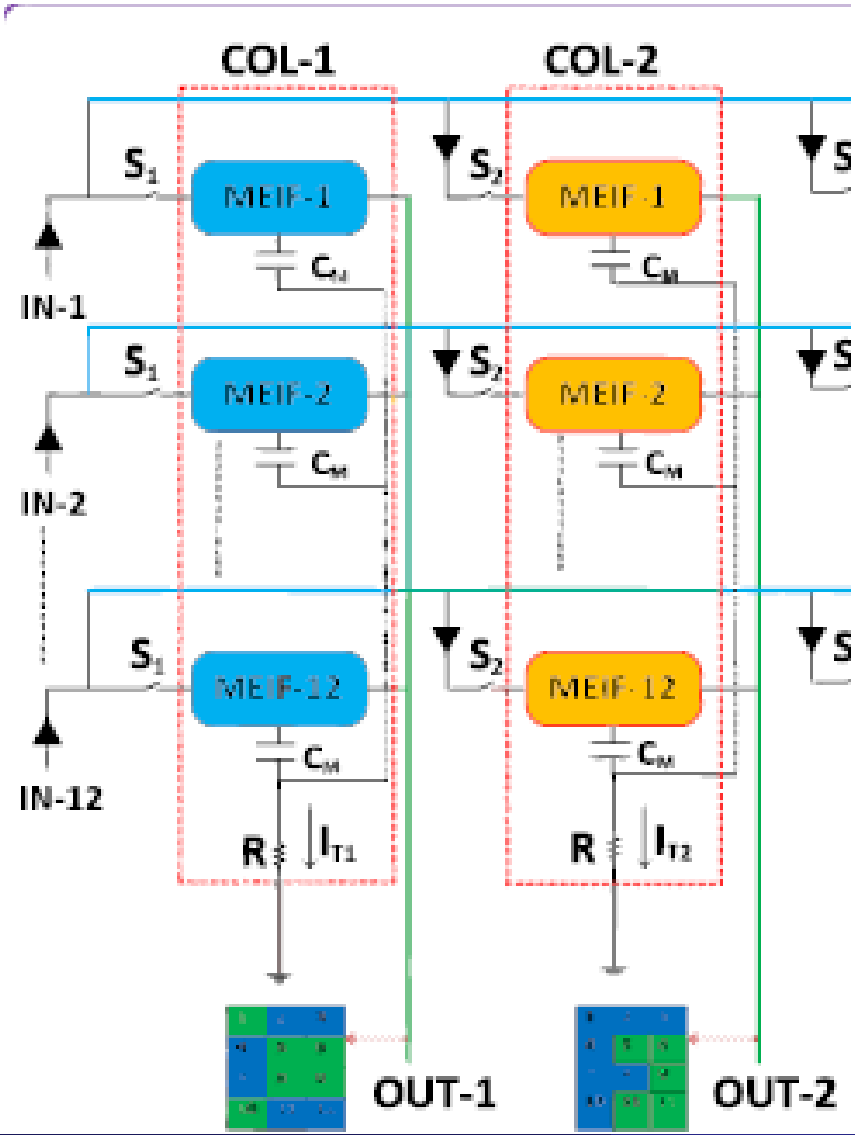

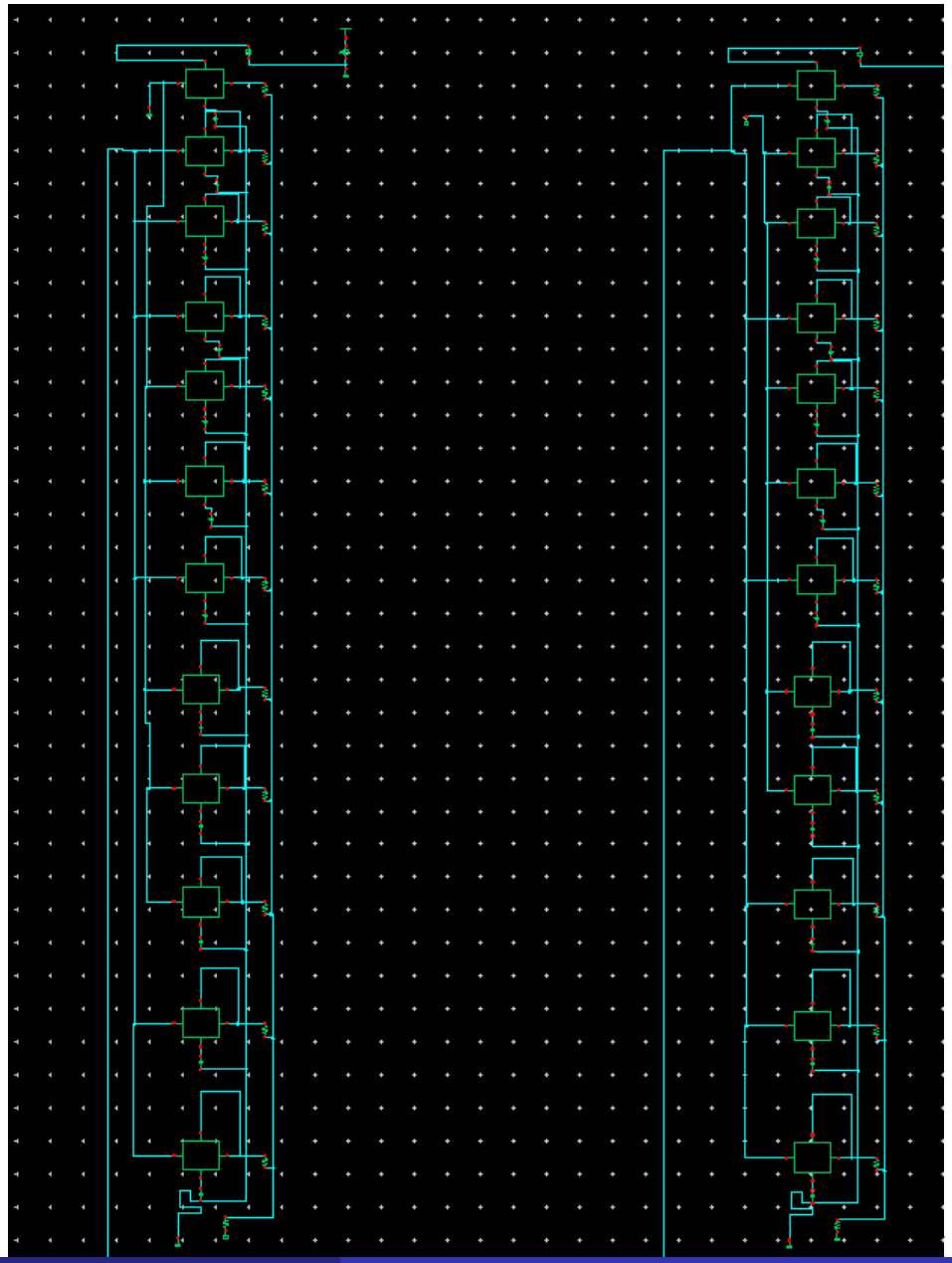

Simulation Results: Transient Analysis

- **Timing Strategy:** V_7 (Clock/Control) is delayed relative to V_9 (Data) to ensure signal stability at the trigger edge.
- **LRS Behavior:** Activated pixels show a rapid integration ramp on the membrane capacitor.
- **HRS Behavior:** Non-activated pixels exhibit negligible leakage, ensuring high noise immunity.
- **Supply:** Simulated at 1.8V in 180nm CMOS process node.

Simulation Waveforms: ON vs OFF Pixels

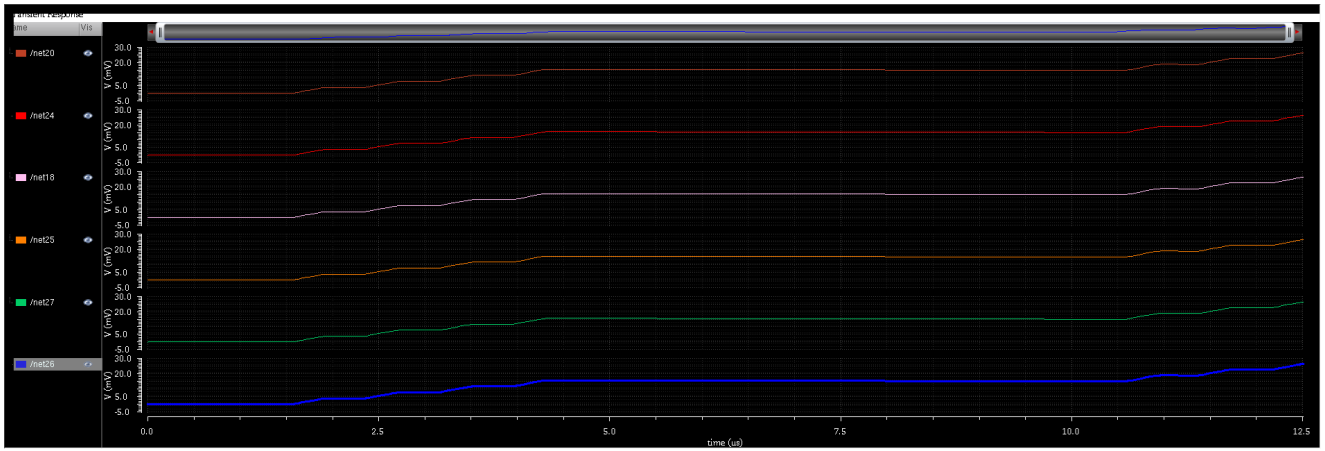

Figure: LRS Integration Ramps (Activated)

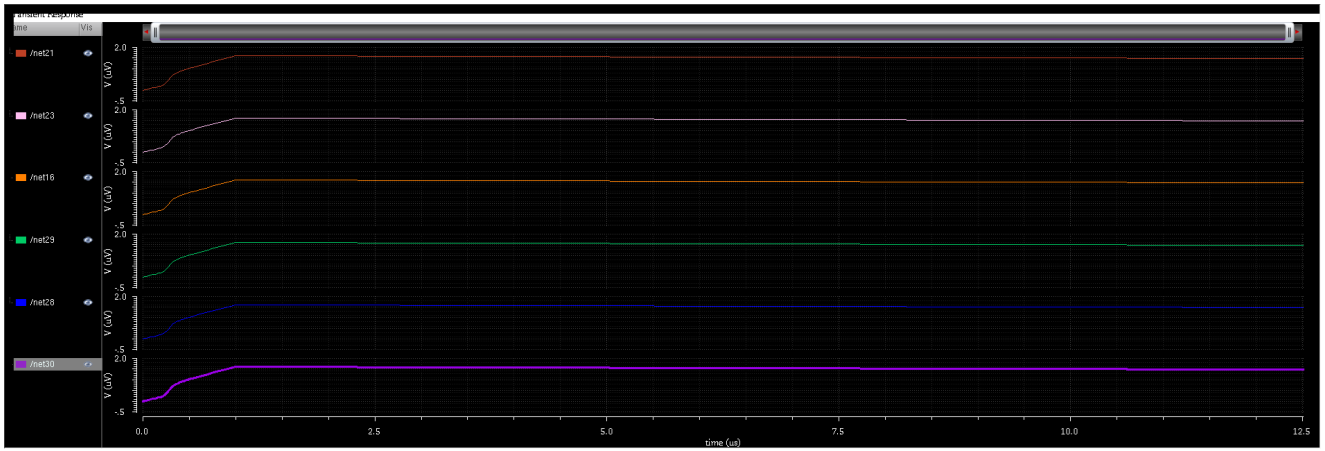

Figure: HRS Leakage Plot (Non-Activated)

Memory Training: Final Analysis

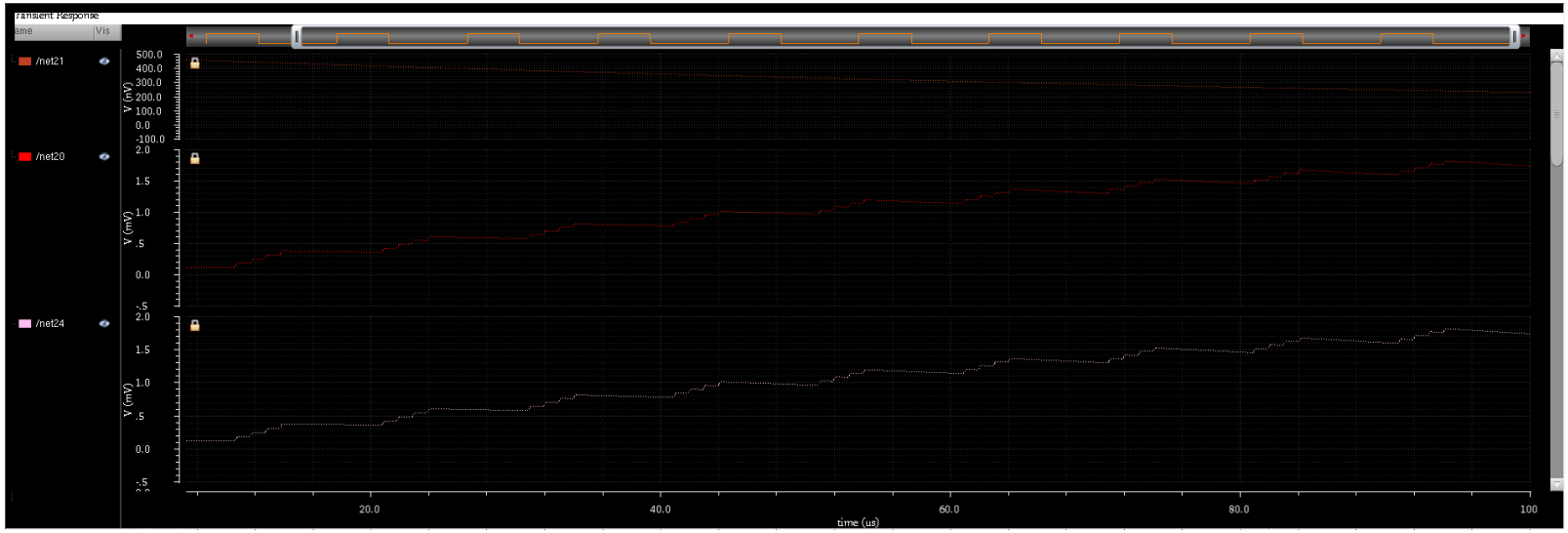

Figure: State Transition During Training

Output Recognition: 'C' and 'L' Patterns

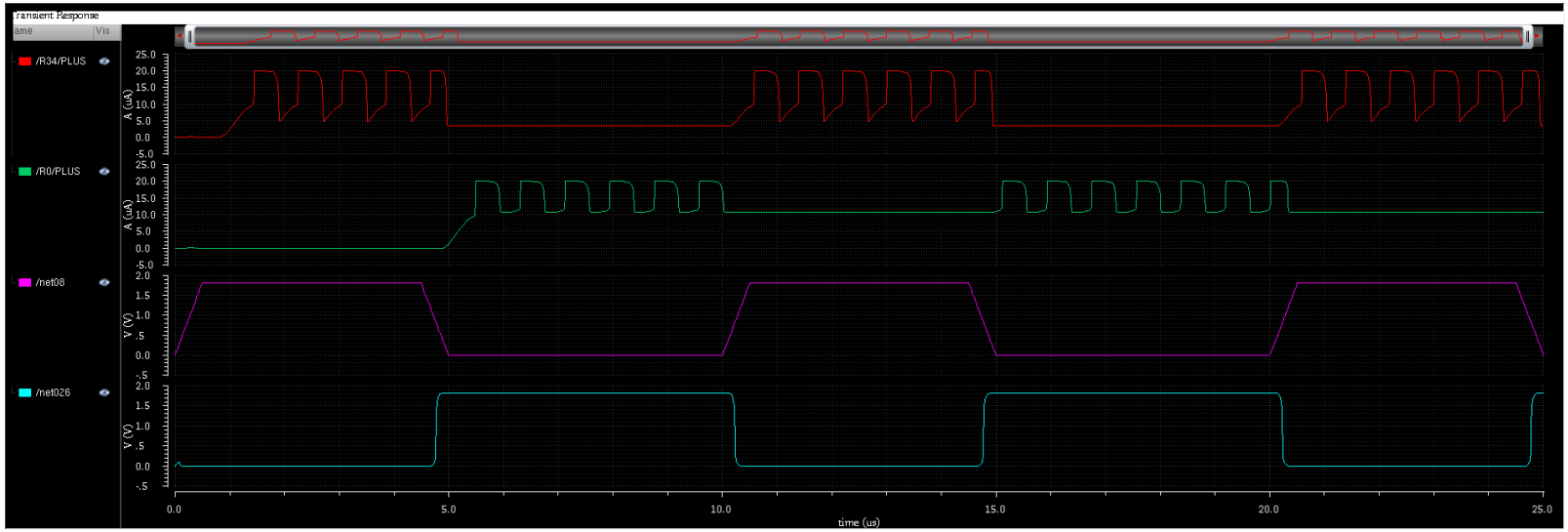

Figure: Final Output Comparison for Different Input Patterns