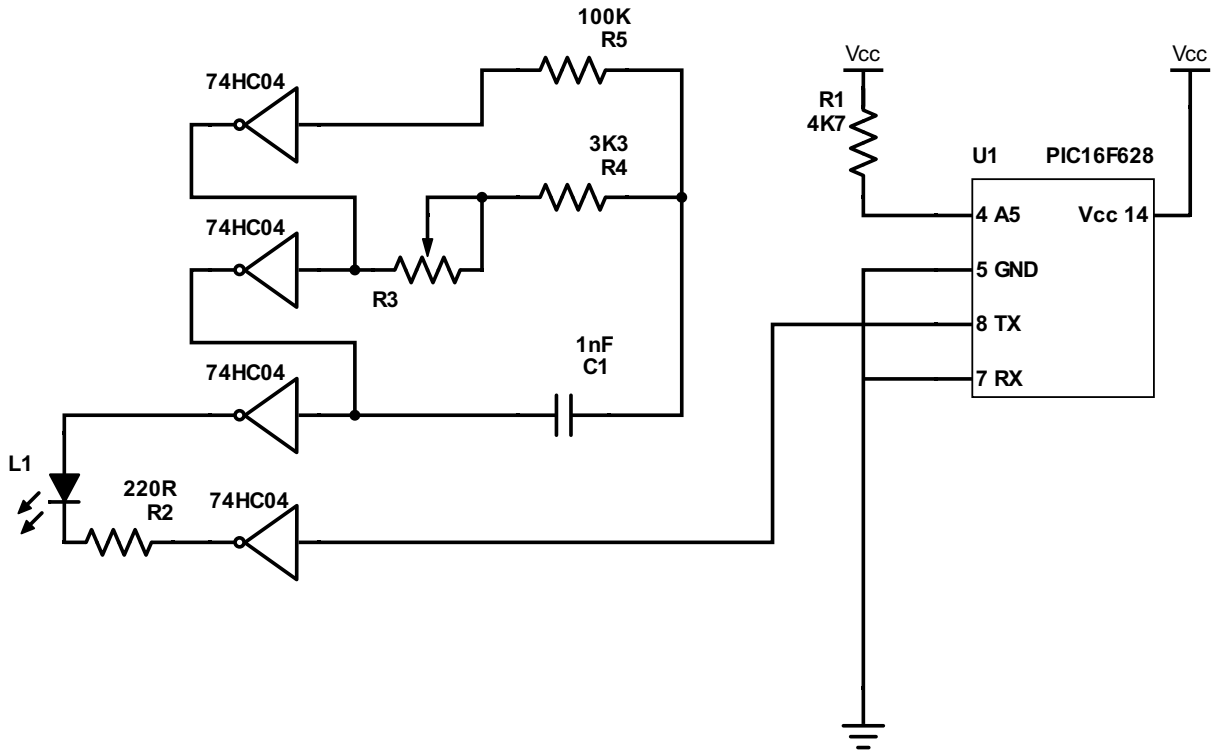

Company Name	
Project Name **Pic16F628 Serial Transmitter**	Date **8/17/2017**
Sheet Title **Page1**	