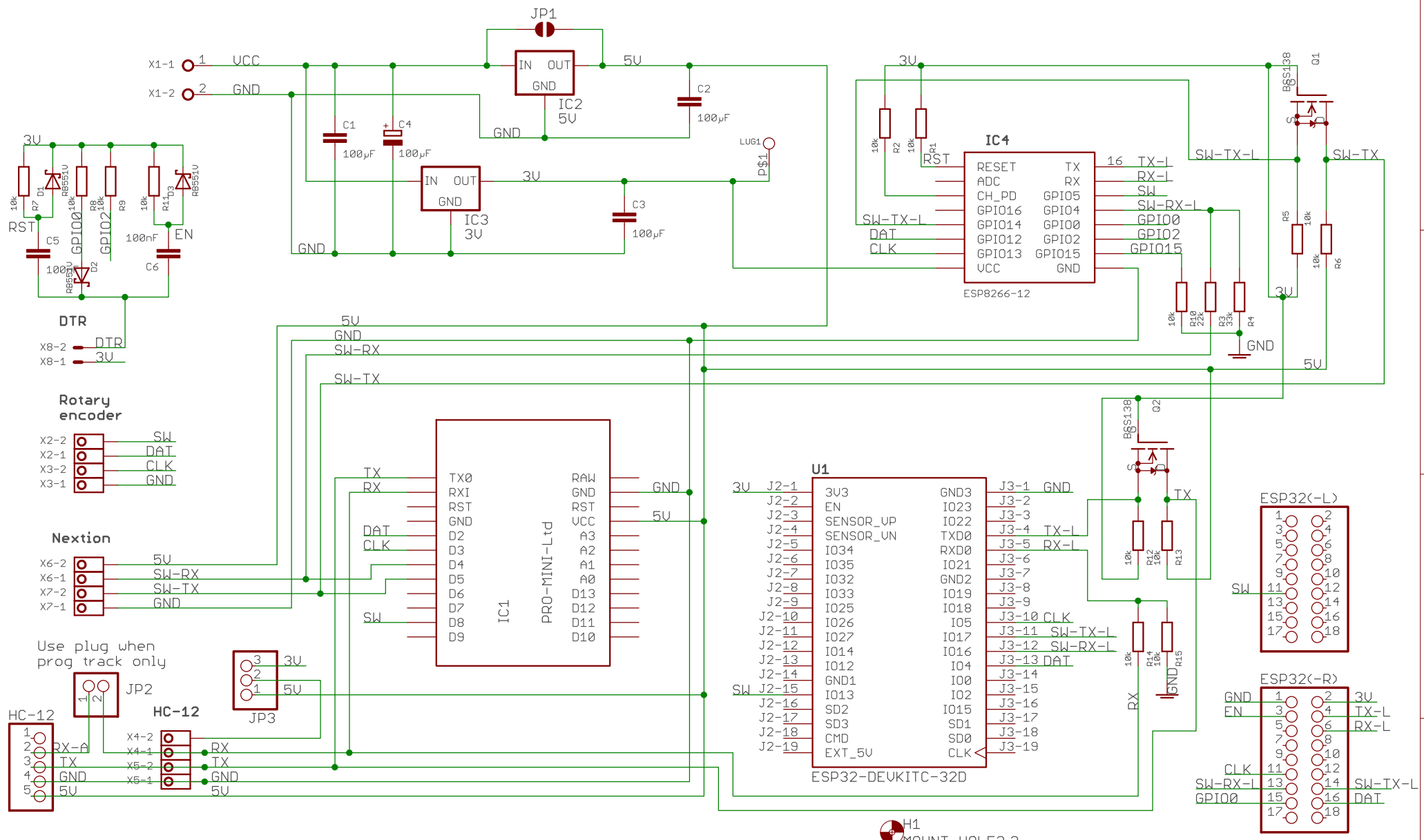

RX & TX = controller line connection.
Radio/Nextion connection:
TX must connect to ext. RX line
RX must connect to ext. TX line
HC-12 = hardware serial
Nextion = software serial

ESP32 development board:
https://tinyurl.com/45vdfm8d
https://tinyurl.com/3zzxvrv2
ESP32 adapter: https://tinyurl.com/yc3eh7j9
ESP8266 adapter: https://tinyurl.com/4rjf9zbp

Nextion DCC controller_v5a
16/11/2023 8:25
Sheet: 1/1