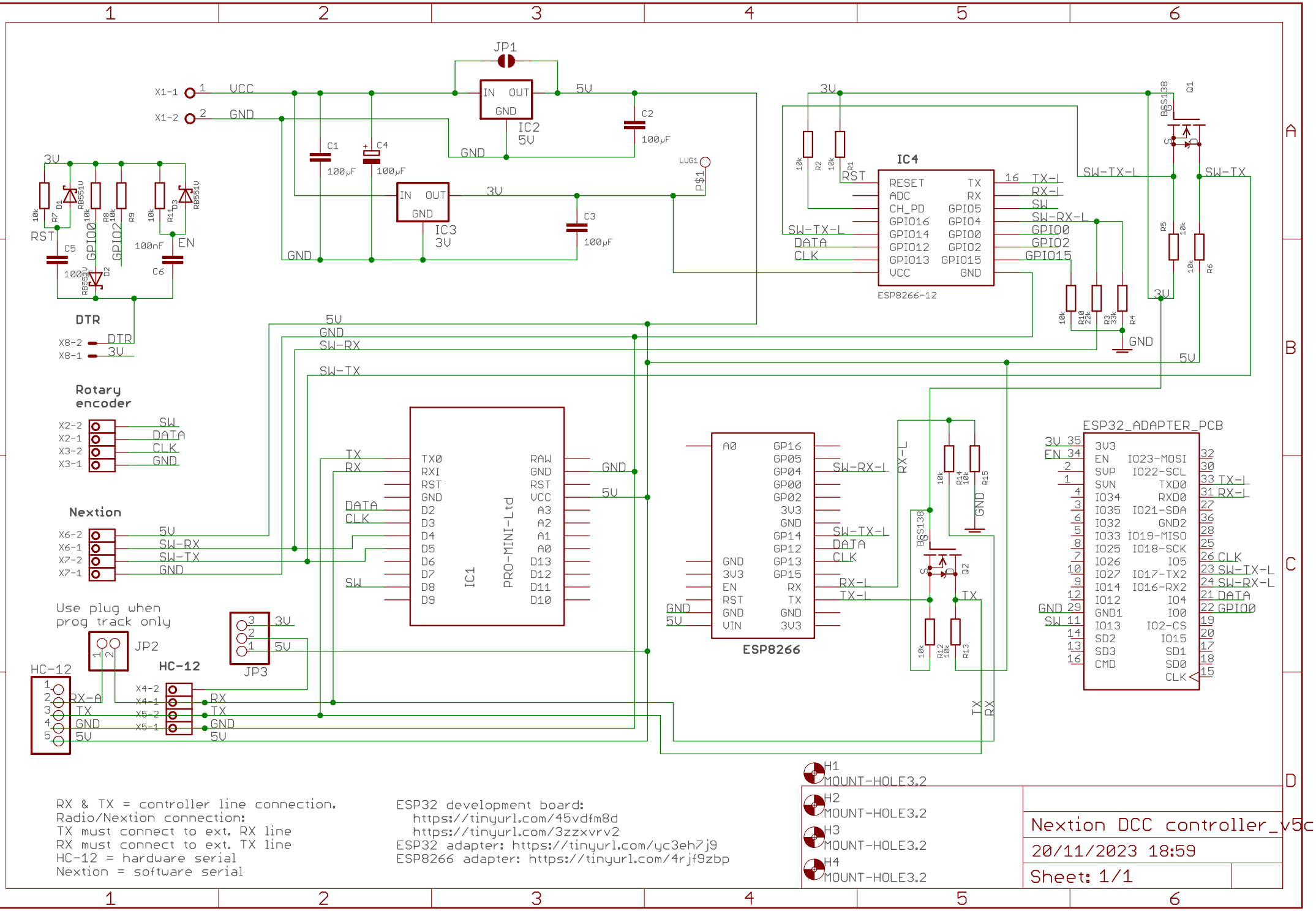
JP1
X1-1
X1-2
VCC
GND
IN OUT
GND
IC2
5V
C1
100µF
C4
100µF
C2
100µF
IC3
3V
C3
100µF
LUG1
P$1
3V
RST
GPIO0
GPIO2
EN
100nF
C5
C6
DTR
X8-2
X8-1
IC4
RESET
ADC
CH_PD
GPIO16
GPIO14
GPIO12
GPIO13
VCC
TX
RX
GPIO5
GPIO4
GPIO0
GPIO2
GPIO15
GND
ESP8266-12
SW-TX-L
DATA
CLK
SW-TX
SW-RX-L
RX-L
SW
GPIO15
BSS138
Q1
Q2
Rotary encoder
X2-2
X2-1
X3-2
X3-1
SW
DATA
CLK
GND
Nextion
X6-2
X6-1
X7-2
X7-1
5V
SW-RX
SW-TX
GND
IC1
PRO-MINI-Ltd
TX0
RXI
RST
GND
D2
D3
D4
D5
D6
D7
D8
D9
RAW
GND
RST
VCC
A3
A2
A1
A0
D13
D12
D11
D10
TX
RX
DATA
CLK
SW
ESP8266
A0
GND
3V3
EN
RST
GND
VIN
GP16
GP05
GP04
GP00
GP02
3V3
GND
GP14
GP12
GP13
GP15
RX
TX
GND
3V3
ESP32_ADAPTER_PCB
3V3
EN
SVP
SVN
IO34
IO35
IO32
IO33
IO25
IO26
IO27
IO14
IO12
GND1
IO13
SD2
SD3
CMD
IO23-MOSI
IO22-SCL
TXD0
RXD0
IO21-SDA
GND2
IO19-MISO
IO18-SCK
IO5
IO17-TX2
IO16-RX2
IO4
IO0
IO2-CS
IO15
SD1
SD0
CLK
Use plug when prog track only
JP2
JP3
HC-12
RX-A
TX
GND
5V
X4-2
X4-1
X5-2
X5-1
RX
TX
GND
5V
H1
MOUNT-HOLE3.2
H2
MOUNT-HOLE3.2
H3
MOUNT-HOLE3.2
H4
MOUNT-HOLE3.2
RX & TX = controller line connection.
Radio/Nextion connection:
TX must connect to ext. RX line
RX must connect to ext. TX line
HC-12 = hardware serial
Nextion = software serial
ESP32 development board:
https://tinyurl.com/45vdfm8d
https://tinyurl.com/3zzxvrv2
ESP32 adapter: https://tinyurl.com/yc3eh7j9
ESP8266 adapter: https://tinyurl.com/4rjf9zbp
Nextion DCC controller_v5c
20/11/2023 18:59
Sheet: 1/1