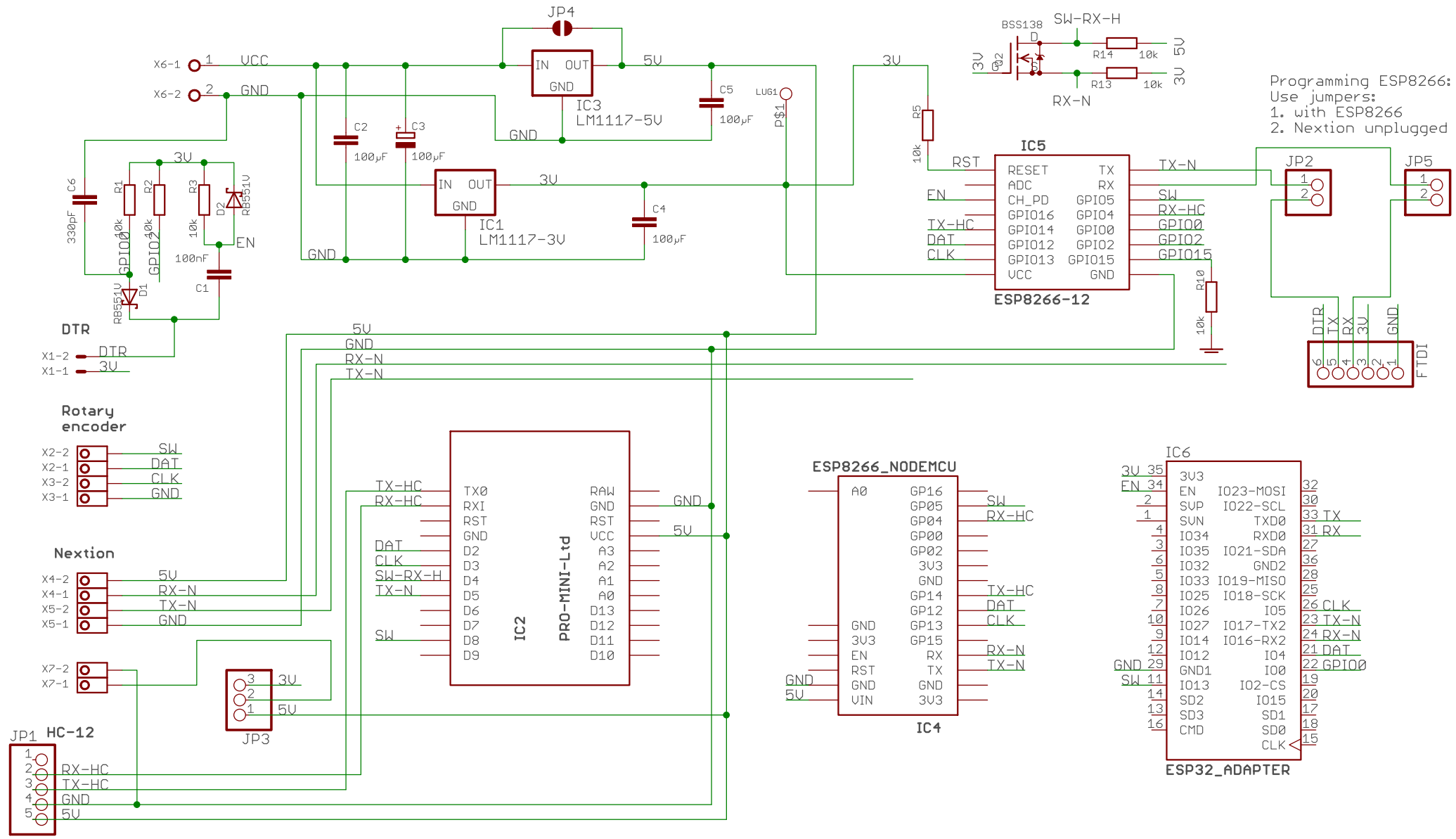

RX & TX = controller line connection.
Radio/Nextion connection:
TX must connect to ext. TX line
RX must connect to ext. RX line
HC-12 = software serial
Nextion = hardware serial

ESP32 development board:
https://tinyurl.com/45vdfm8d
https://tinyurl.com/3zzxvrv2
ESP32 adapter: https://tinyurl.com/yc3eh7j9
ESP8266 adapter: https://tinyurl.com/4rjf9zbp

Nextion DCC controller_v8c	
3/05/2024 13:04	
Sheet:	1/1