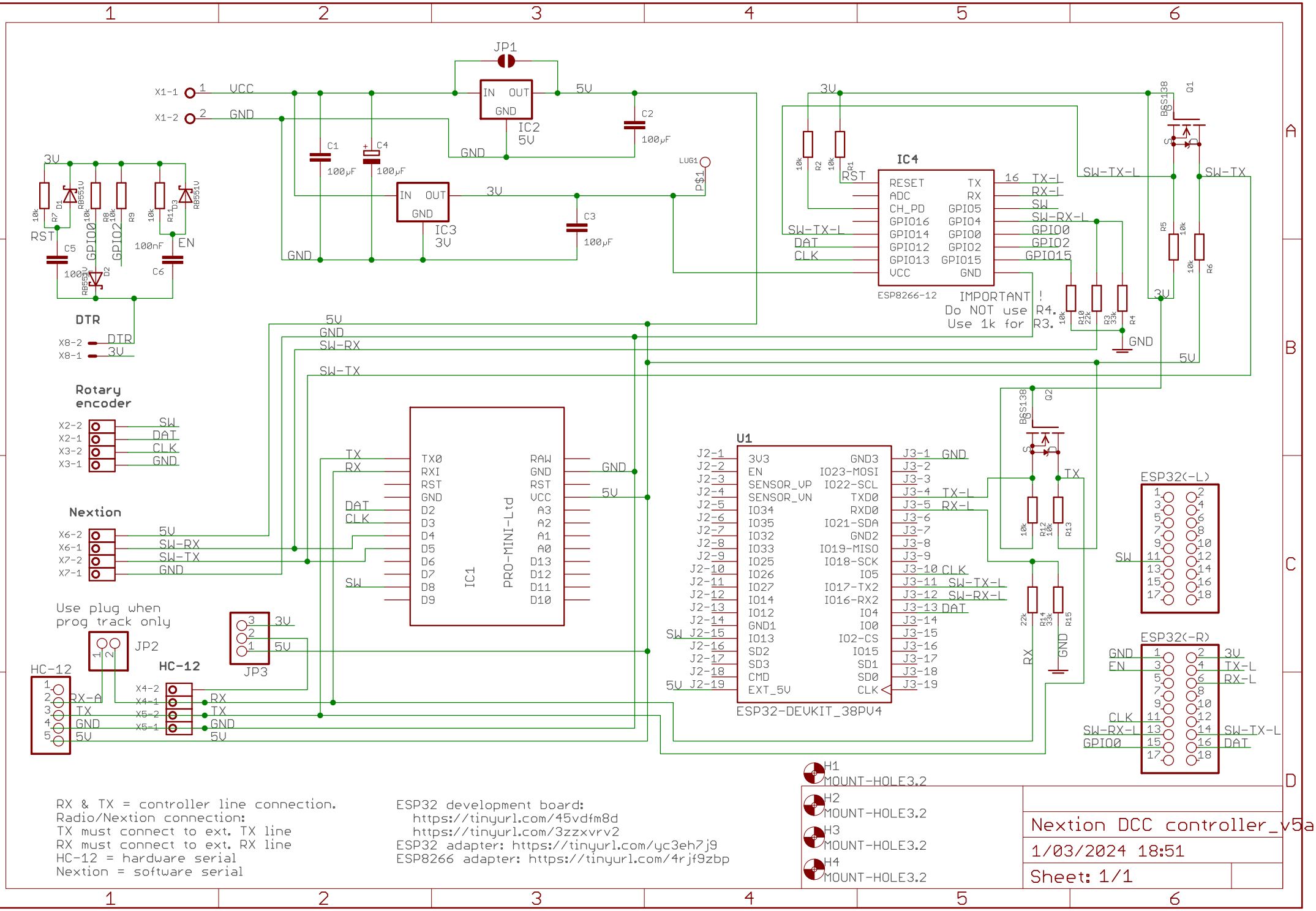
JP1
X1-1 1 VCC
X1-2 2 GND
IN OUT GND
IC2 5V
5V
C2 100µF
C1 100µF
C4 100µF
GND
IN OUT GND
IC3 3V
3V
C3 100µF
LUG1
P$1
3V
RST
GPIO0
GPIO2
EN
100nF
C5 100µF
C6
DTR
X8-2 DTR
X8-1 3V
IC4
RESET
ADC
CH_PD
GPIO16
GPIO14
GPIO12
GPIO13
VCC
TX
RX
GPIO5
GPIO4
GPIO0
GPIO2
GPIO15
GND
16 TX-L
RX-L
SW
SW-RX-L
GPIO0
GPIO2
GPIO15
SW-TX-L
DAT
CLK
ESP8266-12
IMPORTANT !
Do NOT use R4.
Use 1k for R3.
BSS138 Q1
SW-TX-L
SW-TX
5V
GND
SW-RX
SW-TX
Rotary encoder
X2-2 SW
X2-1 DAT
X3-2 CLK
X3-1 GND
Nextion
X6-2 5V
X6-1 SW-RX
X7-2 SW-TX
X7-1 GND
TX
RX
DAT
CLK
SW
IC1
PRO-MINI-Ltd
TX0
RXI
RST
GND
D2
D3
D4
D5
D6
D7
D8
D9
RAW
GND
RST
VCC
A3
A2
A1
A0
D13
D12
D11
D10
U1
ESP32-DEVKIT_38PV4
3V3
EN
SENSOR_VP
SENSOR_VN
IO34
IO35
IO32
IO33
IO25
IO26
IO27
IO14
IO12
GND1
IO13
SD2
SD3
CMD
EXT_5V
GND3
IO23-MOSI
IO22-SCL
TXD0
RXD0
IO21-SDA
GND2
IO19-MISO
IO18-SCK
IO5
IO17-TX2
IO16-RX2
IO4
IO0
IO2-CS
IO15
SD1
SD0
CLK
J3-1 GND
J3-4 TX-L
J3-5 RX-L
J3-10 CLK
J3-11 SW-TX-L
J3-12 SW-RX-L
J3-13 DAT
BSS138 Q2
TX
RX
GND
ESP32(-L)
SW
ESP32(-R)
GND
EN
3V
TX-L
RX-L
CLK
SW-RX-L
GPIO0
SW-TX-L
DAT
Use plug when prog track only
JP2
JP3
3V
5V
HC-12
RX-A
TX
GND
5V
X4-2
X4-1
X5-2
X5-1
RX
TX
GND
5V
H1 MOUNT-HOLE3.2
H2 MOUNT-HOLE3.2
H3 MOUNT-HOLE3.2
H4 MOUNT-HOLE3.2
RX & TX = controller line connection.
Radio/Nextion connection:
TX must connect to ext. TX line
RX must connect to ext. RX line
HC-12 = hardware serial
Nextion = software serial
ESP32 development board:
https://tinyurl.com/45vdfm8d
https://tinyurl.com/3zzxvrv2
ESP32 adapter: https://tinyurl.com/yc3eh7j9
ESP8266 adapter: https://tinyurl.com/4rjf9zbp
Nextion DCC controller_v5a
1/03/2024 18:51
Sheet: 1/1