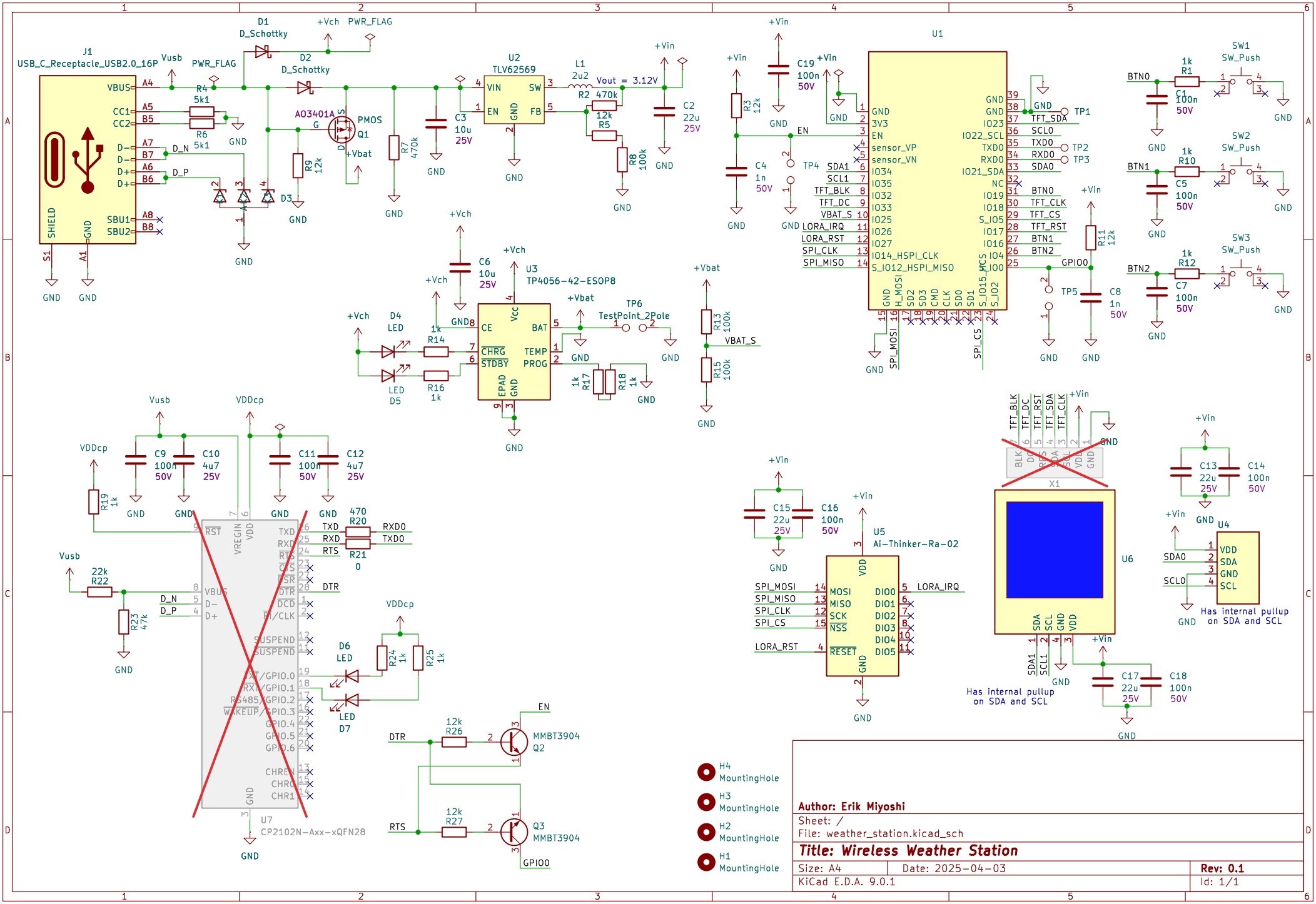

Author: Erik Miyoshi

Sheet: /

File: weather_station.kicad_sch

Title: Wireless Weather Station

Size: A4	Date: 2025-04-03	Rev: 0.1
KiCad E.D.A. 9.0.1		Id: 1/1