8V power for voltage reference.

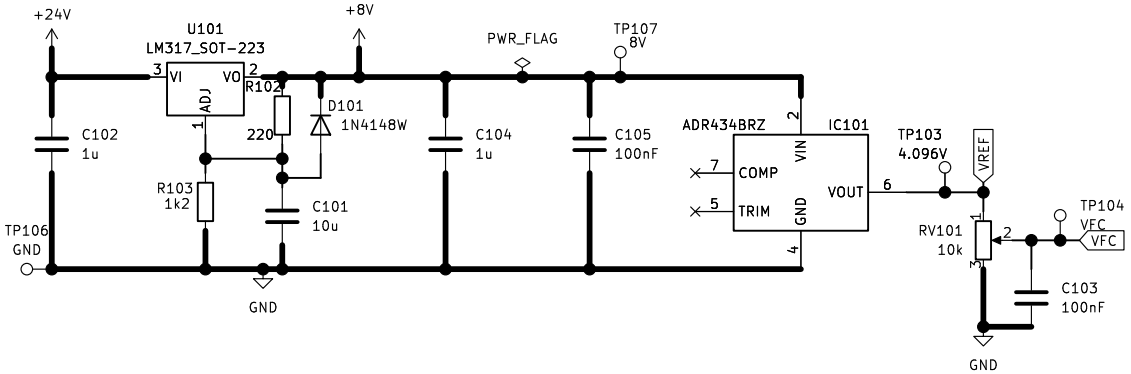

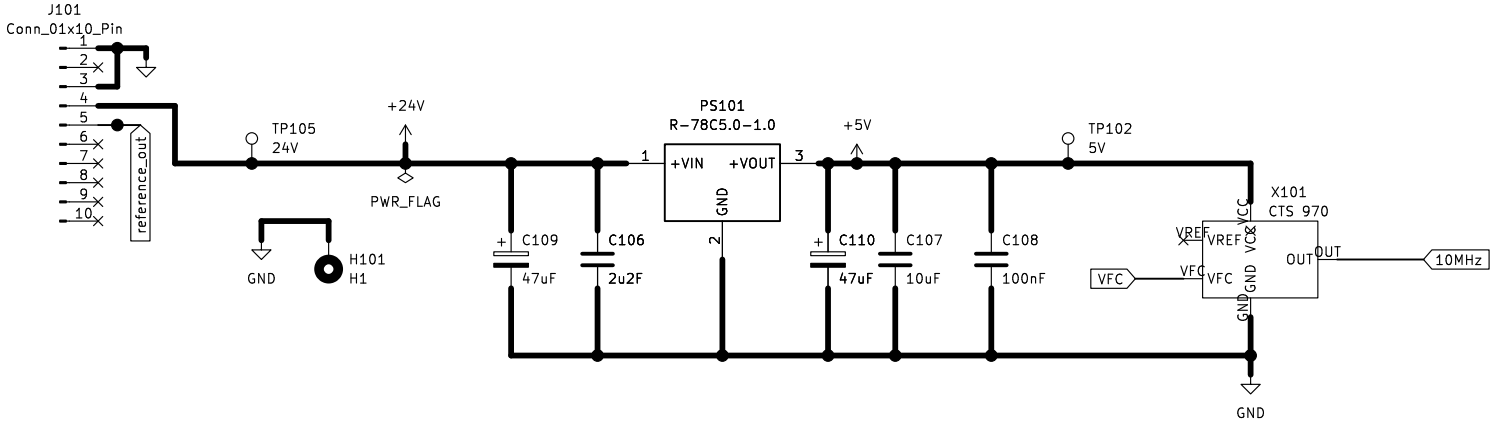

10.5 MHz low pass filter, 7th order Chebyshev.

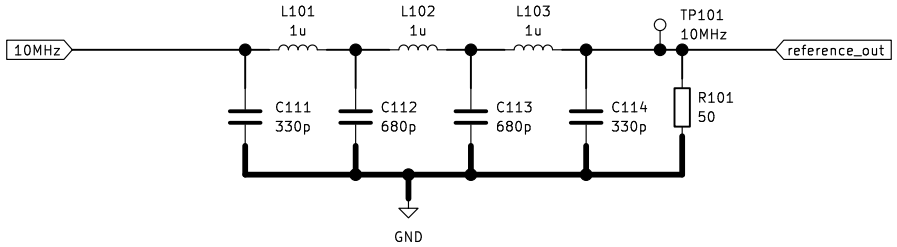

https://github.com/ErikOSorensen/PM66xx-frequency-reference
https://syncchannel.blogspot.com/2016/04/flukephilips-pm66xx-frequency-counter.html
Inspiration (and physical measurements) from The Sync Channel Blog.
Erik Ø. Sørensen, LB3TH

Sheet: /
File: pm6674.kicad_sch

Title: 10MHz reference board for Philips counter PM6674

Size: A4	Date: 2023-12-20	**Rev:**
KiCad E.D.A. kicad 7.0.9		Id: 1/1