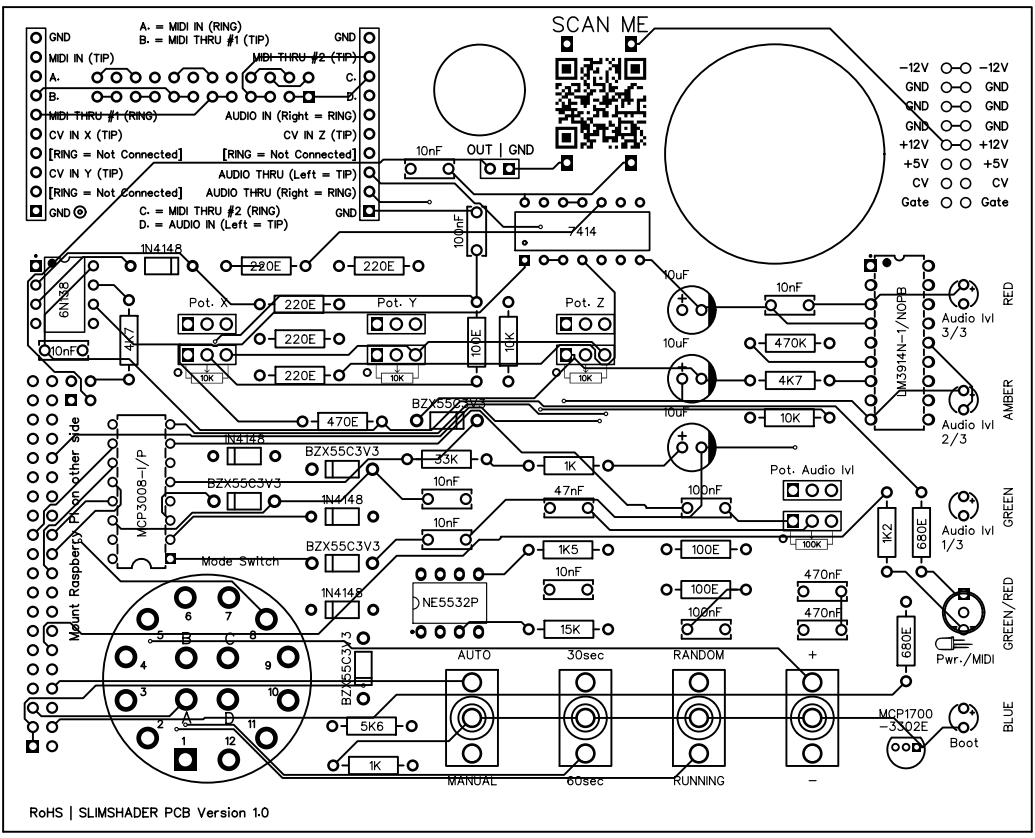

RoHS | SLIMSHADER PCB Version 1.0