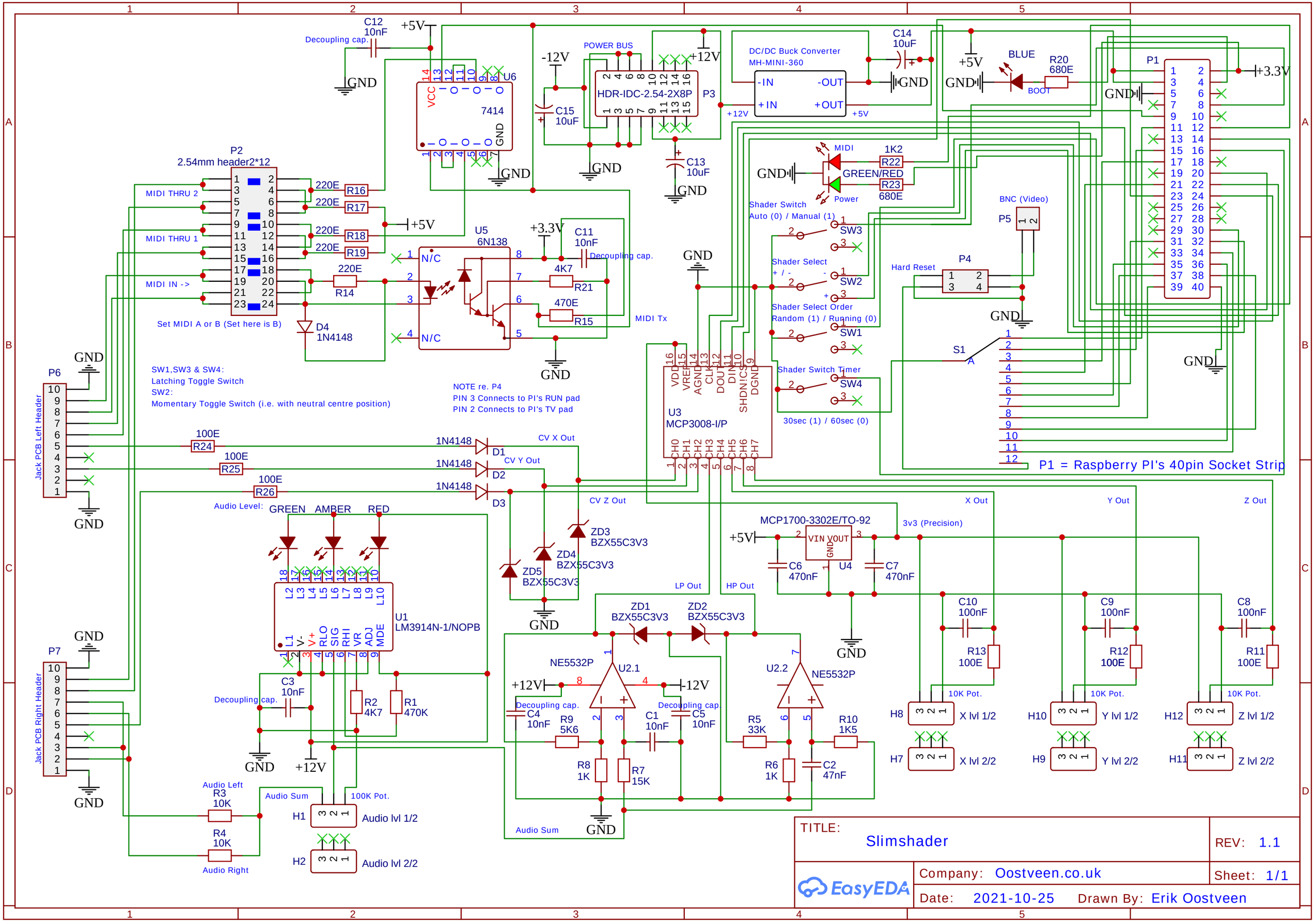
C12
10nF
Decoupling cap.
+5V
GND
U6
7414
VCC
GND
-12V
C15
10uF
POWER BUS
HDR-IDC-2.54-2X8P
P3
+12V
C13
10uF
DC/DC Buck Converter
MH-MINI-360
-IN
+IN
-OUT
+OUT
C14
10uF
BLUE
R20
680E
BOOT
P1
+3.3V
MIDI
GREEN/RED
Power
1K2
R22
R23
680E
Shader Switch
Auto (0) / Manual (1)
SW3
Shader Select
+ / -
SW2
Shader Select Order
Random (1) / Running (0)
SW1
Shader Switch Timer
SW4
30sec (1) / 60sec (0)
BNC (Video)
P5
Hard Reset
P4
S1
P1 = Raspberry PI's 40pin Socket Strip
P2
2.54mm header2*12
MIDI THRU 2
MIDI THRU 1
MIDI IN ->
220E
R16
R17
R18
R19
R14
D4
1N4148
Set MIDI A or B (Set here is B)
U5
6N138
N/C
C11
10nF
4K7
R21
470E
R15
MIDI Tx
SW1,SW3 & SW4:
Latching Toggle Switch
SW2:
Momentary Toggle Switch (i.e. with neutral centre position)
NOTE re. P4
PIN 3 Connects to PI's RUN pad
PIN 2 Connects to PI's TV pad
P6
Jack PCB Left Header
100E
R24
R25
R26
1N4148
D1
D2
D3
CV X Out
CV Y Out
CV Z Out
ZD3
BZX55C3V3
ZD4
BZX55C3V3
ZD5
BZX55C3V3
U3
MCP3008-I/P
VDD
VREF
AGND
CLK
DOUT
DIN
SHDN
CS
DGND
CH0
CH1
CH2
CH3
CH4
CH5
CH6
CH7
Audio Level:
GREEN
AMBER
RED
U1
LM3914N-1/NOPB
L1
V-
V+
RLO
SIG
RHI
VR
ADJ
MDE
P7
Jack PCB Right Header
C3
10nF
R2
4K7
R1
470K
Audio Left
R3
10K
R4
10K
Audio Right
Audio Sum
100K Pot.
H1
H2
Audio lvl 1/2
Audio lvl 2/2
MCP1700-3302E/TO-92
VIN
VOUT
U4
C6
470nF
C7
470nF
3v3 (Precision)
X Out
Y Out
Z Out
LP Out
HP Out
ZD1
BZX55C3V3
ZD2
BZX55C3V3
NE5532P
U2.1
U2.2
C4
10nF
R9
5K6
R8
1K
R7
15K
C1
10nF
C5
10nF
R5
33K
R6
1K
C2
47nF
R10
1K5
C10
100nF
C9
100nF
C8
100nF
R13
100E
R12
100E
R11
100E
10K Pot.
H8
H7
H10
H9
H12
H11
X lvl 1/2
X lvl 2/2
Y lvl 1/2
Y lvl 2/2
Z lvl 1/2
Z lvl 2/2
TITLE:
Slimshader
REV: 1.1
Company: Oostveen.co.uk
Sheet: 1/1
Date: 2021-10-25
Drawn By: Erik Oostveen
EasyEDA