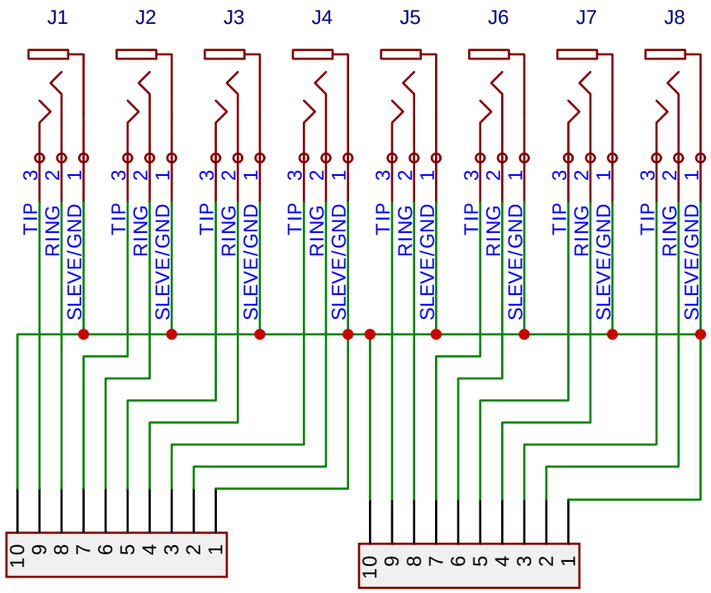

TITLE: BreakoutPCB_Jack_Version_2		REV: 1.0
EasyEDA	Company: Your Company	Sheet: 1/1
	Date: 2021-09-14 Drawn By: ErikOostveen	