PRODUCT SPECIFICATIONS

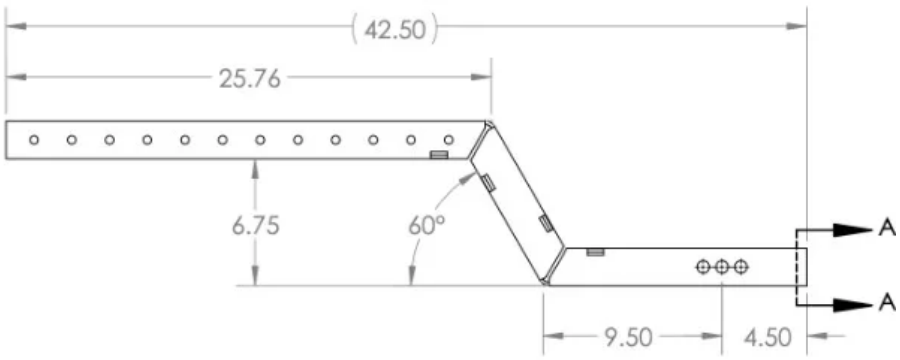

HIGH MODULAR ATTACHMENT BAR - LONG

Weight – 15 lbs

Length – 42.5 in

Width

Height

Load Capacity – 500 lbs

Bike Load Capacity Front – 125 lbs

Bike Load Capacity Back – 125 lbs

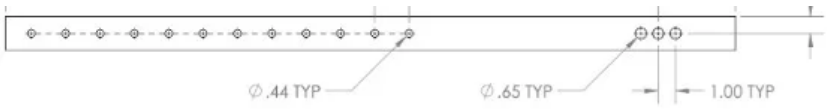

HIGH MODULAR ATTACHMENT BAR - LONG

Weight – 13.4 lbs

Length – 42.5 in

Width – 2 in

Height – 2 in

Load Capacity – 500 lbs

Bike Load Capacity Front – 125 lbs

Bike Load Capacity Back – 125 lbs

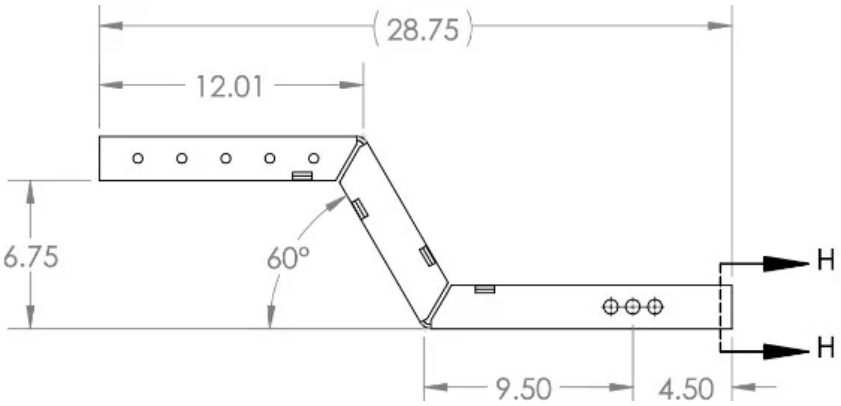

Length – 42.5 in

Width – 2 in

Height -8 in

Load Capacity – 500 lbs

Bike Load Capacity Back – 125 lbs

LOW MODULAR ATTACHMENT BAR - SHORT

Weight – 10.8 lbs

Length – 28.5 in

Width – 2 in

Height – 2 in

Load Capacity – 500 lbs

Bike Load Capacity Back – 125 lbs

ALL BIKE RACK

Weight – 26 lbs

Length – 6.5 in

Width – 58 in

Height – 13 in

Load Capacity – 120 lbs

Phone: (801) 686-3691

Operating hours: 9:00 to 5:00 MST

Useful Links

Shop

About Us

Contact

Support

Blog

Events

Warranty

Product Specifications

Radgnarack Manual

Media Kit

Social Media

Facebook

Youtube

Instagram

Copyright © 2026 RadGnaRack.