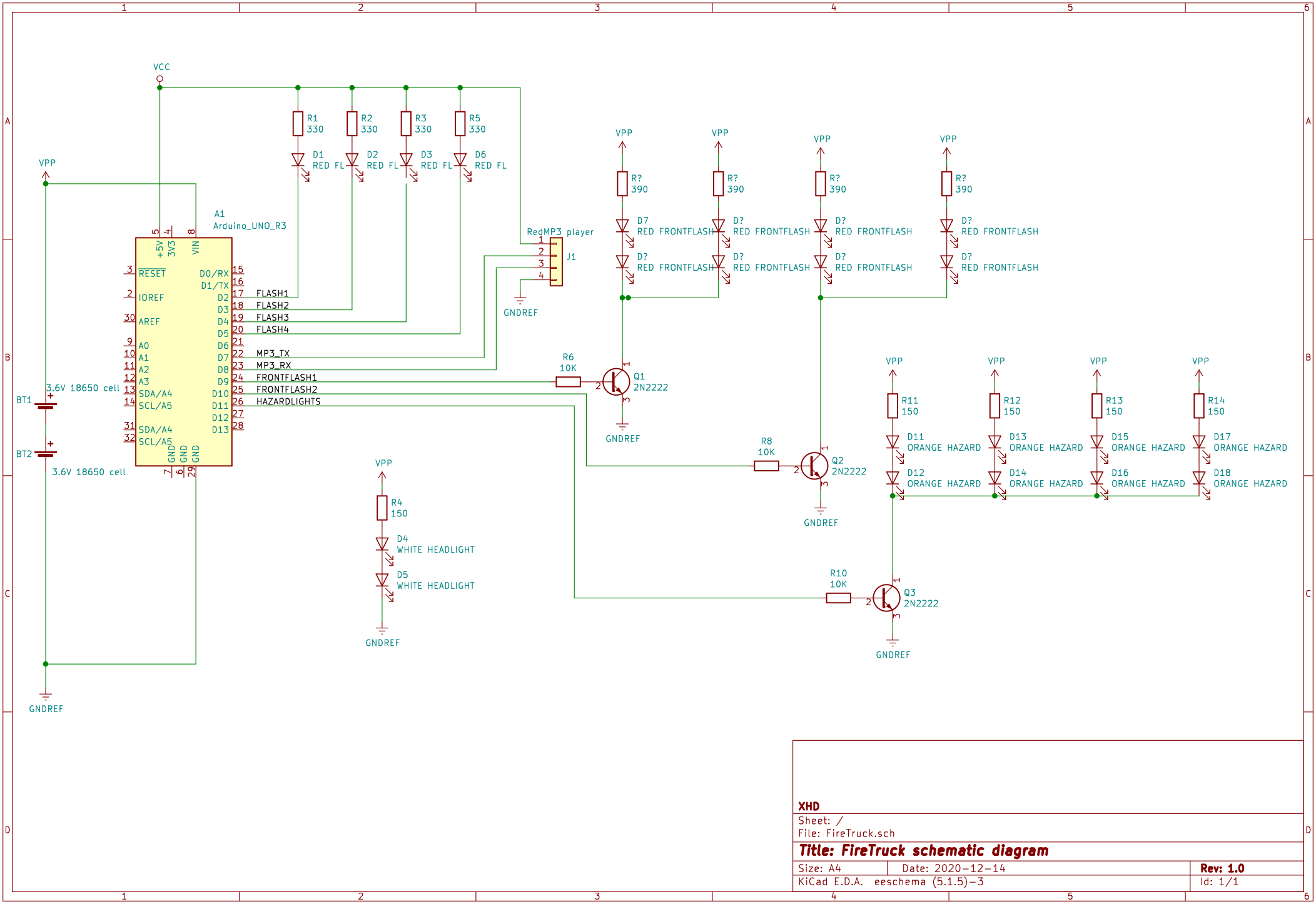

XHD

Sheet: /

File: FireTruck.sch

Title: FireTruck schematic diagram

Size: A4	Date: 2020-12-14	**Rev: 1.0**
KiCad E.D.A. eeschema (5.1.5)-3		Id: 1/1