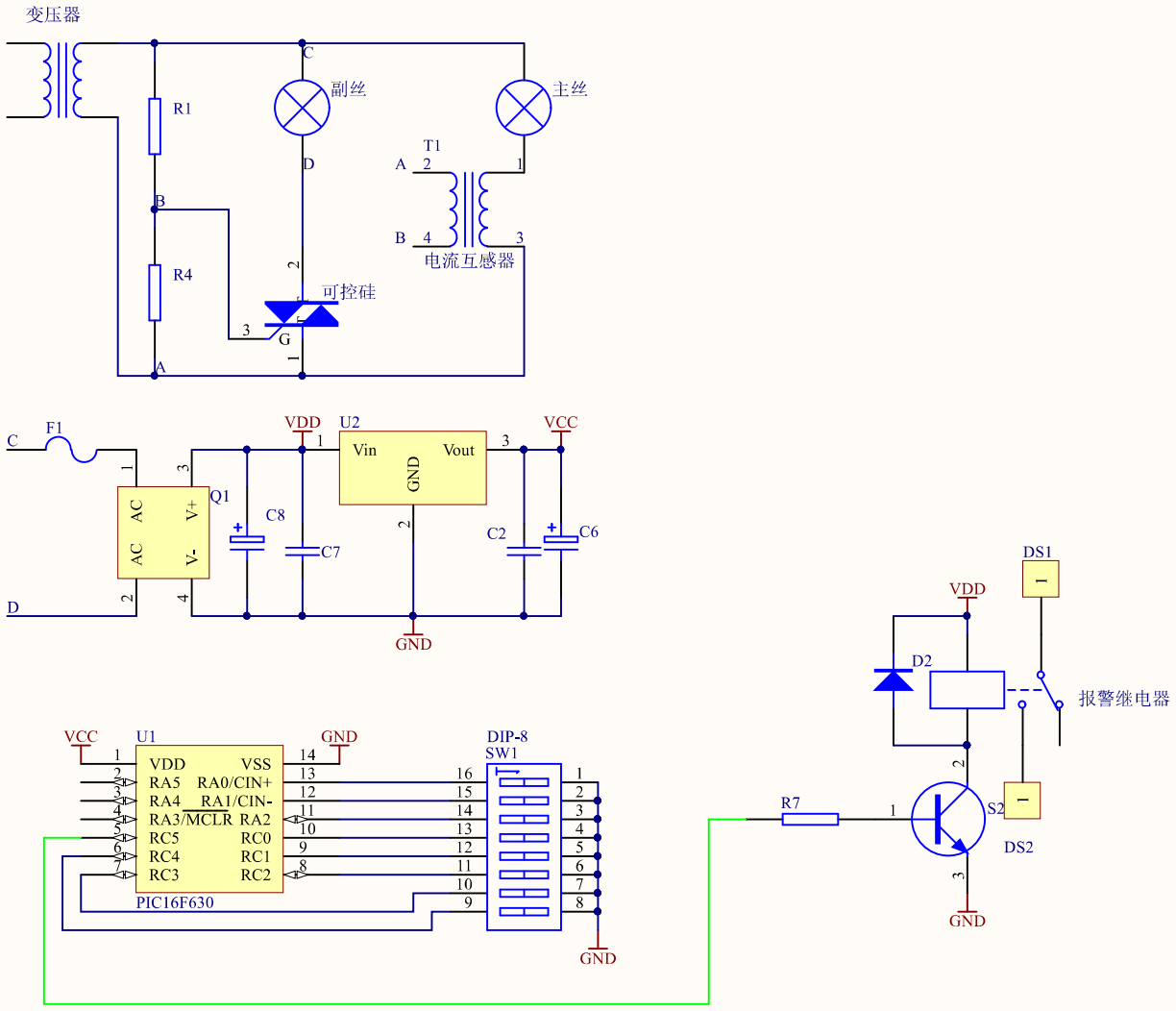

Title		
Size A4	Number	Revision
Date: 2023/7/21		Sheet of
File: C:\Users\..\-5简.SchDoc		Drawn By: