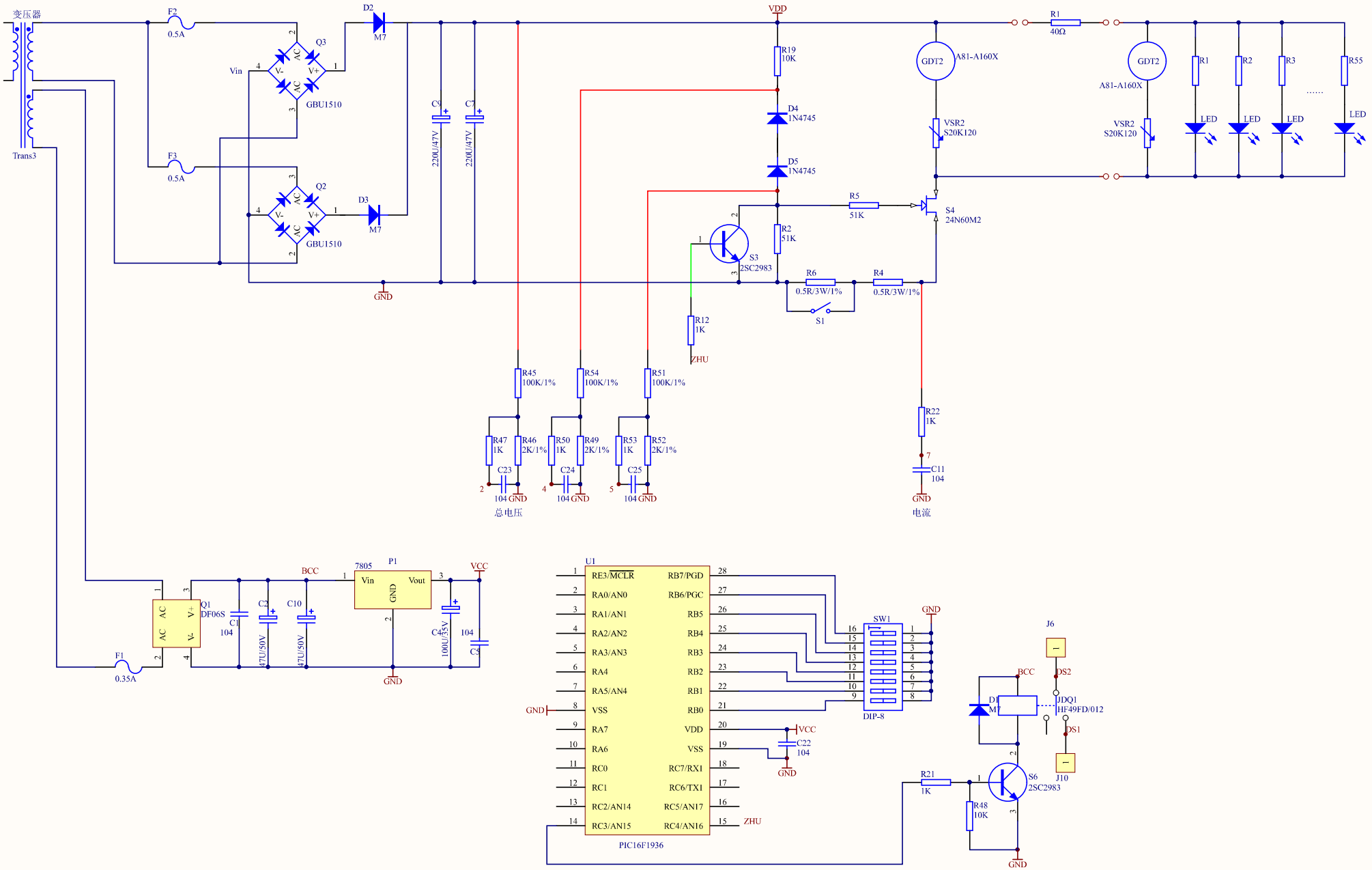

Title		
Size A3	Number	Revision
Date: 2023/10/10	Sheet of	
File: C:\Users\...\1936盘式串40欧姆_2023.9.8.Sch	Drawn By:	