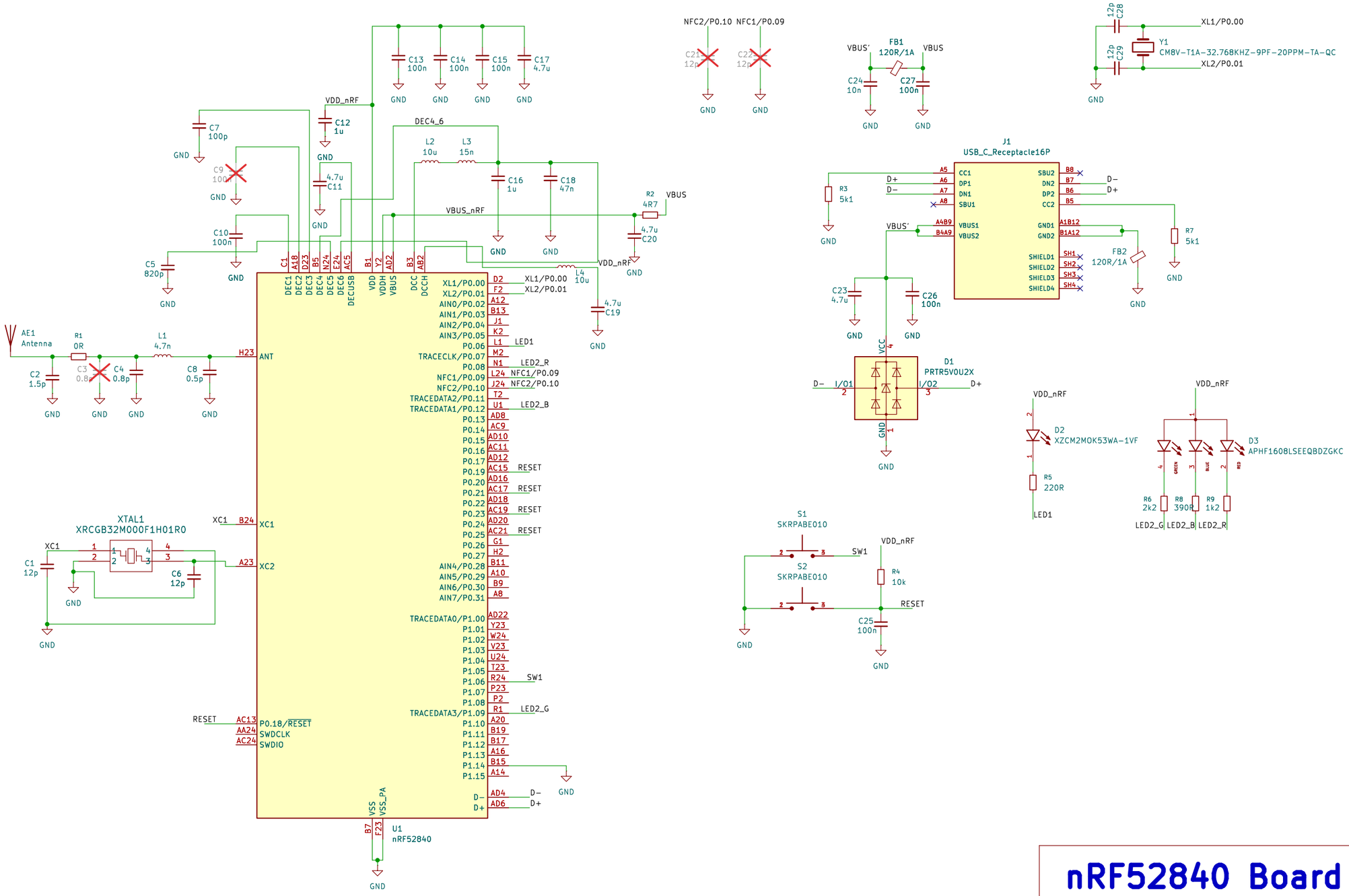

nRF52840 Board

Sheet: /
File: nRF52840_Design.kicad_sch

Title:

Size: A3	Date:	**Rev:**
KiCad E.D.A. 9.0.3		Id: 1/1