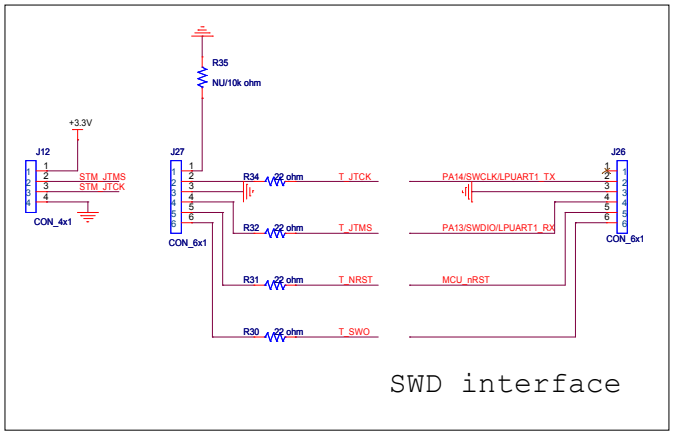

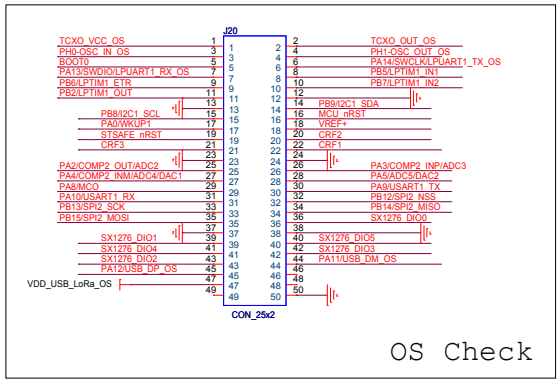

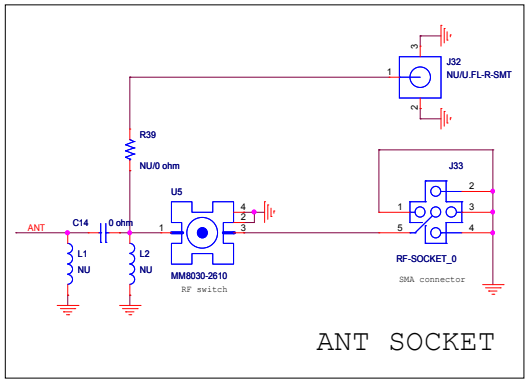

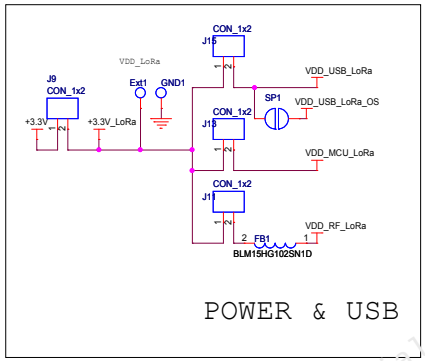

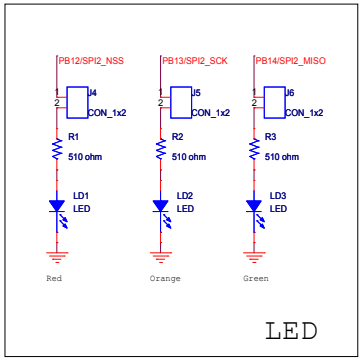

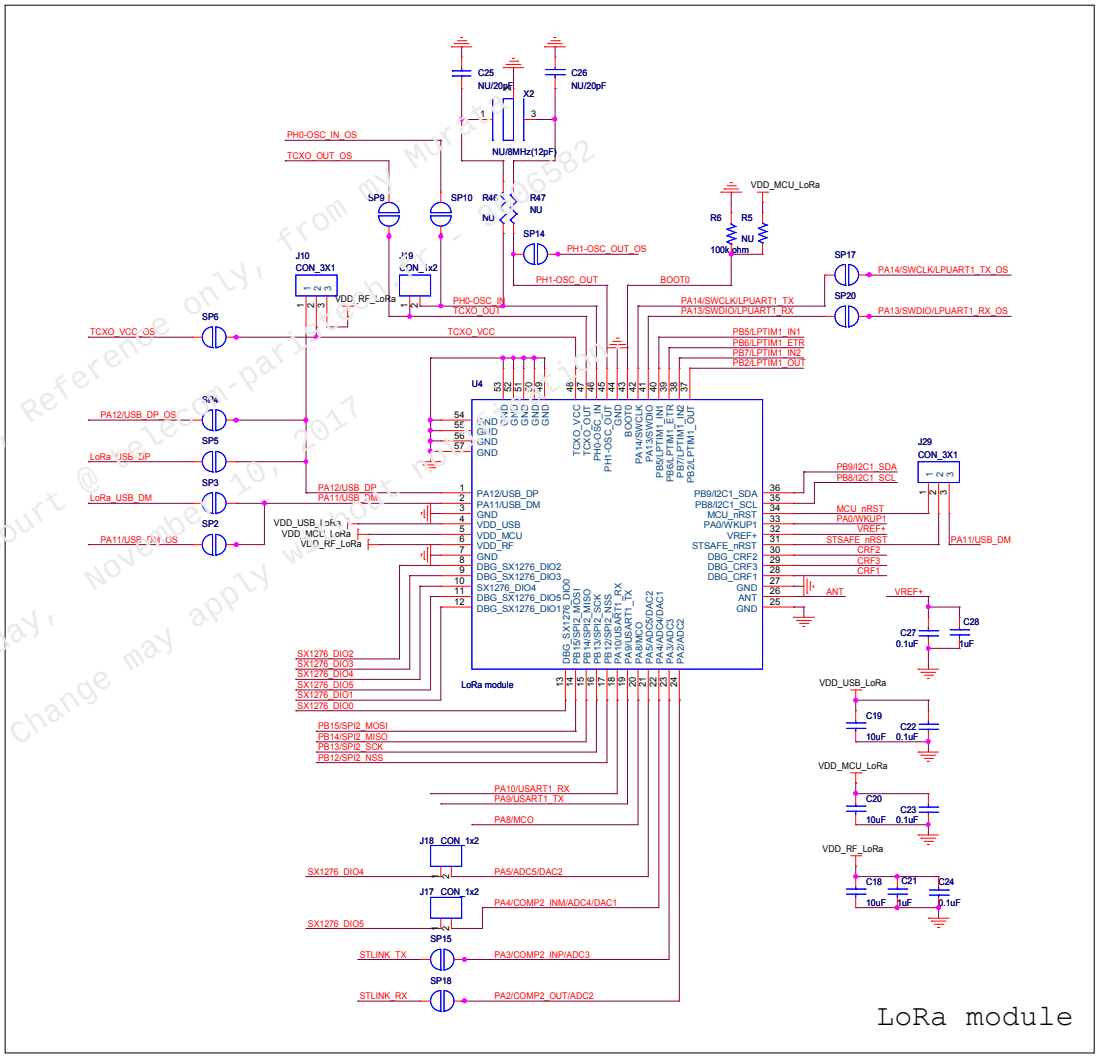

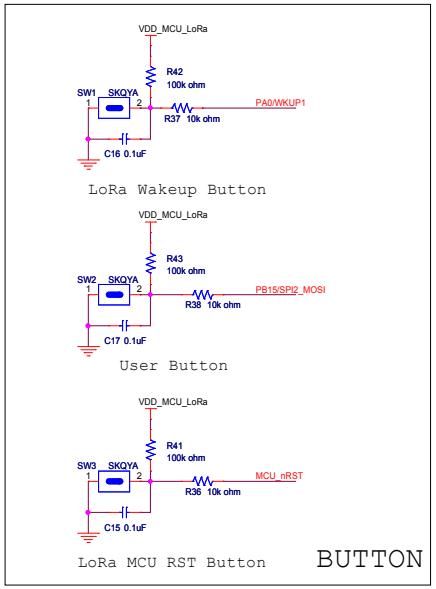

CONFIDENTIAL

Confidential, Reference only, from my Murata - 2016582
deribaucourt @ telecom-paristech.fr - 2016582
Friday, November 10, 2017
Change may apply without notice

Title	<JS-0656 TypeABZ LoRa EVK>	
Size Custom	Document Number <Doc>	Rev <1.0>
Date: Wednesday, July 20, 2016	Sheet 1 of 1	