The Final Design Report For SnapSpeed Car

Nikolaus Ryder, Daniel Shuster, Aayesha Kamran, and Sofia Galeano

Department of Engineering, Rowan University

First-Year Engineering Clinic II

Professor Spirer

April 5th, 2025

Abstract

As a group, we designed a toy that could be sold alongside a child's meal. This product's significance is to appeal to children while being safe to play with. Our part sizes and simplicity were guided by research on age-appropriate toy design, ensuring the toy is easy and safe for young children to interact with (Thangthong et al., 2019). We ended up with a toy car that has the ability to have its chassis switched with another chassis as well as wheels that could rotate, engaging children aged 3–9 while prioritizing safety and simplicity. The toy's customizable chassis was inspired by research showing that interactive and imaginative features are most appealing to children (Acuff, 2010). The design process involved evaluating alternatives based on safety, cost, usability, and sustainability. Universal Design and Sustainable Engineering principles guided key decisions to ensure the toy is accessible and minimizes environmental impact. We followed a structured design approach supported by methods recommended in toy design literature (Fernandes & Coelho, 2013). A functional prototype was developed and tested, and future improvements are proposed for manufacturability and enhanced playability.

The goal of this project is to create a children's meal toy that is safe, affordable, sustainable, and engaging for children aged 3–9 years old. Kids' meal toys have long been used to attract young customers and create brand loyalty, but they also influence creativity and learning (Kurnit, 2005). Today, there is greater demand for toys that are educational, inclusive, and environmentally responsible. We considered how children's toys can support different stages of cognitive growth and incorporated features that promote hands-on learning and exploration (Gao, Xing, & Fu, 2020). Toys like ours can also positively influence children's behavior and perceptions, as suggested by recent studies on toy marketing (da Silva Ferreira, 2014). Due to declining kids'

meal traffic in recent years, innovative and exciting toys are more essential than ever. Our design also reflects responsible marketing values, ensuring it is appropriate, safe, and free of manipulative features. Play is central to child development, and our toy encourages exploration, coordination, and imagination (Glazer, 2009 ; Page & Thorsteinsson, 2017).

We designed a product that comes with a child's meal at a fast-food restaurant. The toy we created was a toy car with an interchangeable chassis that we called SnapSpeed Car. It was designed using Universal Design principles, including low physical effort and simple, intuitive use, to ensure ease of play for children with varying abilities (Heljakka, 2019). It also applies Sustainable Engineering principles such as material minimization, recyclability, and design for disassembly to reduce environmental impact and manufacturing cost (Cañete et al., 2024). Our design aligns with models that emphasize sensory accessibility and user-focused functionality in toy development (Children's toy design process…, n.d.).

This report outlines the design process, constraints and criteria, toy alternatives, selection methods, final prototype development, and future improvements.

Constraints and criteria

A child's toy should be designed with the thought of the age range, simplicity, engagement, and safety. The age range for the toy we made is 3 years old to 9 years old. A child's meal toy should be relatively simple in functions and design so that the user of our product can understand how to use the product. A toy helps engage the child in creativity which motivates them to learn. Safety is the most important aspect of designing a children's toy since we don't want anyone getting hurt by our product. The constraints we had for designing our toy

car was that it must be big enough to not choke kids and small enough to fit a meal box, must incorporate two functions, and must be suitable for kids from 3 to 9 years old. Our criterion for it is to minimize cost, choking hazards, use difficulty, assembly difficulty, and waste. The minimum size of the toy should be 3 cm by 6 cm by 1 cm. The maximum size of the toy is 16 cm by 9cm by 10cm.

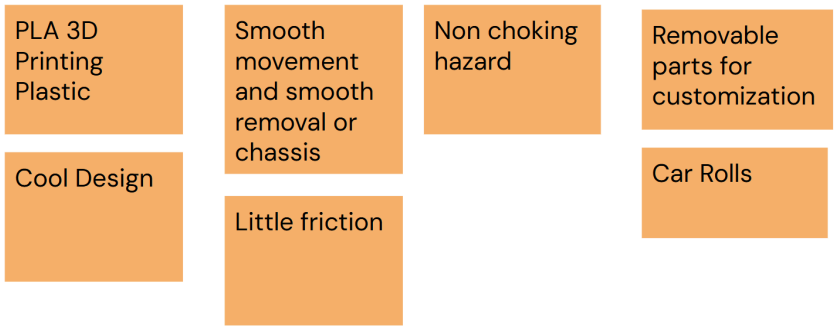

Figure 1 - Affinity Diagram

Alternatives

While brainstorming, our team came up with four separate designs that fit with the constraints and criteria. Our first design, Figure A1, was a dinosaur toy. This toy would have had an articulating head with the ability to rotate it 360 degrees. This toy also included the ability for the tail to be movable. In our second design, Figure A2, we thought of a minecraft toy. The toy would have been the character Steve riding a pig with the ability to have movement in the legs of the pig and the arms of Steve. In Figure A3 our third alternative can be seen. A car toy with moving wheels and a removable body that is separate from the chassis. This was the alternative we decided to use. Our Final alternative, Figure A4, was a robot toy that had movable arms and legs.

Final design

As a group, we put all of our toy ideas together into a chart, ranked them in different categories, and decided based on their rankings in these categories. The categories that we used to determine the toy we went with were the estimated cost to produce it, how large it is, how long it would take to create it, and how heavy it would be. Our final decision for the toy we wanted to make was a toy car with an interchangeable chassis. The toy car ranked as the cheapest product we could produce. It was the smallest of our ideas which didn't turn out to be true. It was estimated to be our assembly time. Also, the toy car was the lowest weight as well. Our final product is a rectangular base of the car that has bearings on the sides of it that have the wheels fitted into the barring. This car base also has four indents that can hold magnets on the top of it so it can connect to the chassis. We ended up making two chassis, one of them was similar to a truck and the other was similar to a van. These chassis both have four indents that hold the magnets so they can connect to the base of the toy car. If we had to choose a manufacturing process, we would choose injection molding since it can be cheap based on how much we would produce and the cost we found including all aspects of injection molding.

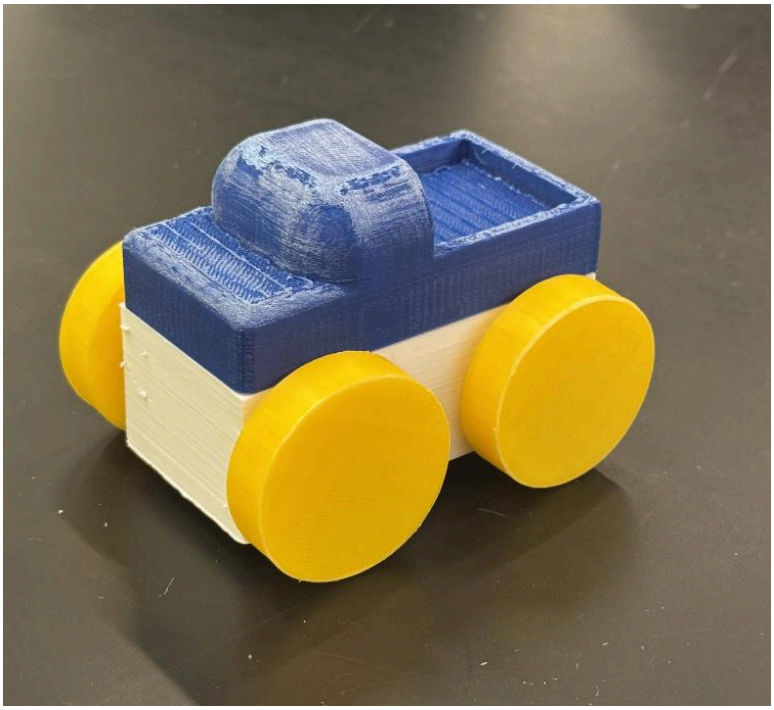

Figure 2 - Final Prototype

PROTOTYPE

Our final prototype is a simple car design with moving wheels and a removable body that can be separated from the car's chassis. In the chassis of the car, Figure B1, there are four ball bearings pressed into the side of the chassis. This allows for the wheels, Figure B3, to be connected to the chassis while also having the ability to spin freely overall making the car move. The car body and chassis are connected using eight magnets with four on the top of the chassis and four on the bottom of the body, Figure B2. This allows the car to stay centered and connected to the car without any movement. When you want to remove the body from the chassis, you can lightly pull the two sides away from each other until the magnets are not connected anymore. A challenge we faced while designing our prototype was the design of the wheels. In our first prototype, we thought of using an axle design that could freely spin and

stretch across the car connecting both wheels. This ended up failing when we realized how fragile and unreliable the axel could be. In our second prototype we thought of using the bearings for the actual wheel. For this we redesigned our chassis to have four cylinders extruding from the chassis enabling us to put the bearings on them. This also ended up failing because the bearings did not work well as wheels. Finally we thought of press fitting the bearings into the chassis and making our own wheels to fit into the center of the bearings. This ended up working and is what we used for the final prototype.

WARNING:

CHOKING HAZARD and Be Careful of **SHARP EDGES**.

Not for children under 3 years.

Figure 3 - Safety label

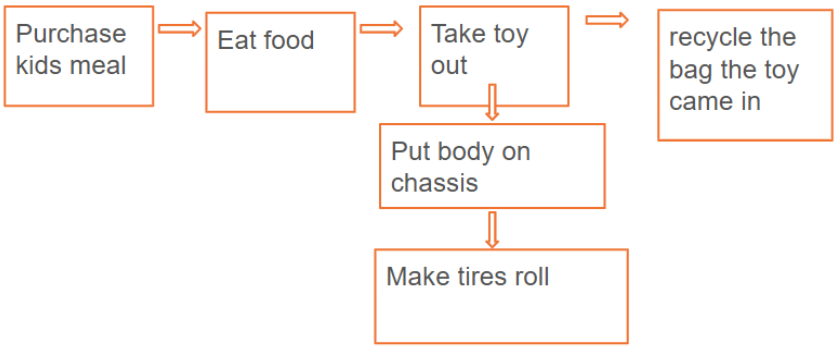

Figure 4 - Activity Network

There are a few improvements that need to be made before our toy car gets mass-produced. One of the improvements that would need to be made is to make the toy car a little smaller so it could fit better into the packaging for the toy. Another improvement that would need to be done before mass-production is that we would need to make more types of chassis. Our toy car does have an easy way of putting on the chassis and can be rolled so it can be played with.

Task	**User/Performance**	**Product feedback**	**Problems**	**Recommendations**
Putting body on chassis	Can remove the current outer body and can snap on an alternate one, like changing its skin	The chassis can connect but it might require a bit of force and if the child applies too much force there is a risk of toy being damaged	1)Chassis was sliding off because the magnets were repelling each other	1)Make sure magnets are paired up correctly with their charge
Child rolling the car	Can “drive” the car by pushing it along a surface to make it roll on its wheels	Car rolls well but requires a bit more grip	1)Axle isn’t letting the bearing spin 2)Not all bearings are spinning bc there is not enough grip	1)Replace axle with built-in axle 2)Add tires so all wheels spin equally

Figure 5 - Task Analysis Table

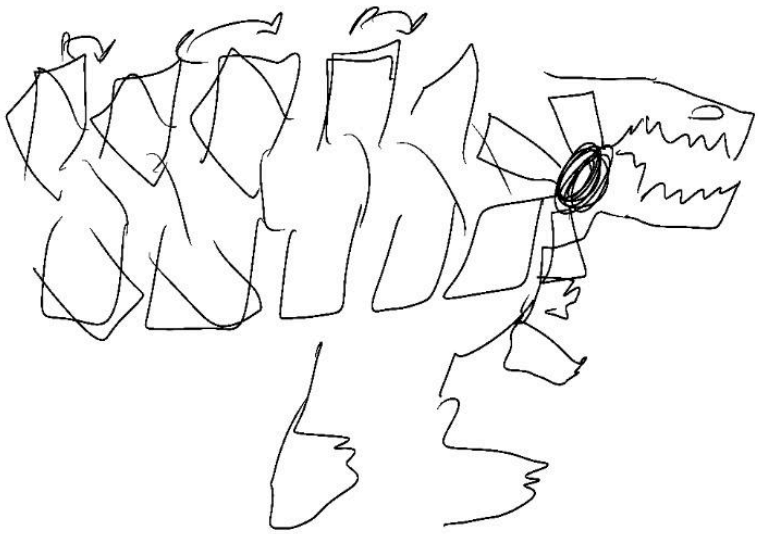

Figure A1 - Dinosaur Toy (Articulating Head & Movable tail)

Figure A2 - Steve Riding pig Toy

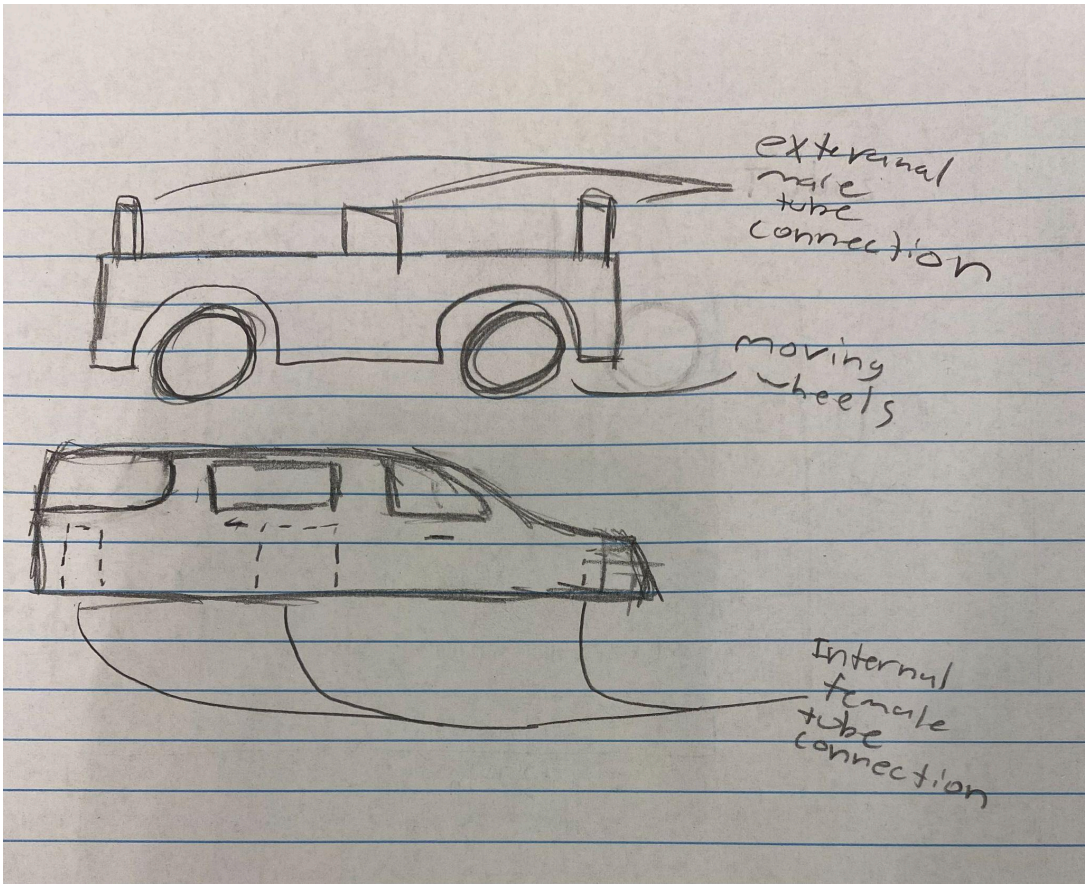

Figure A3 - Car Toy

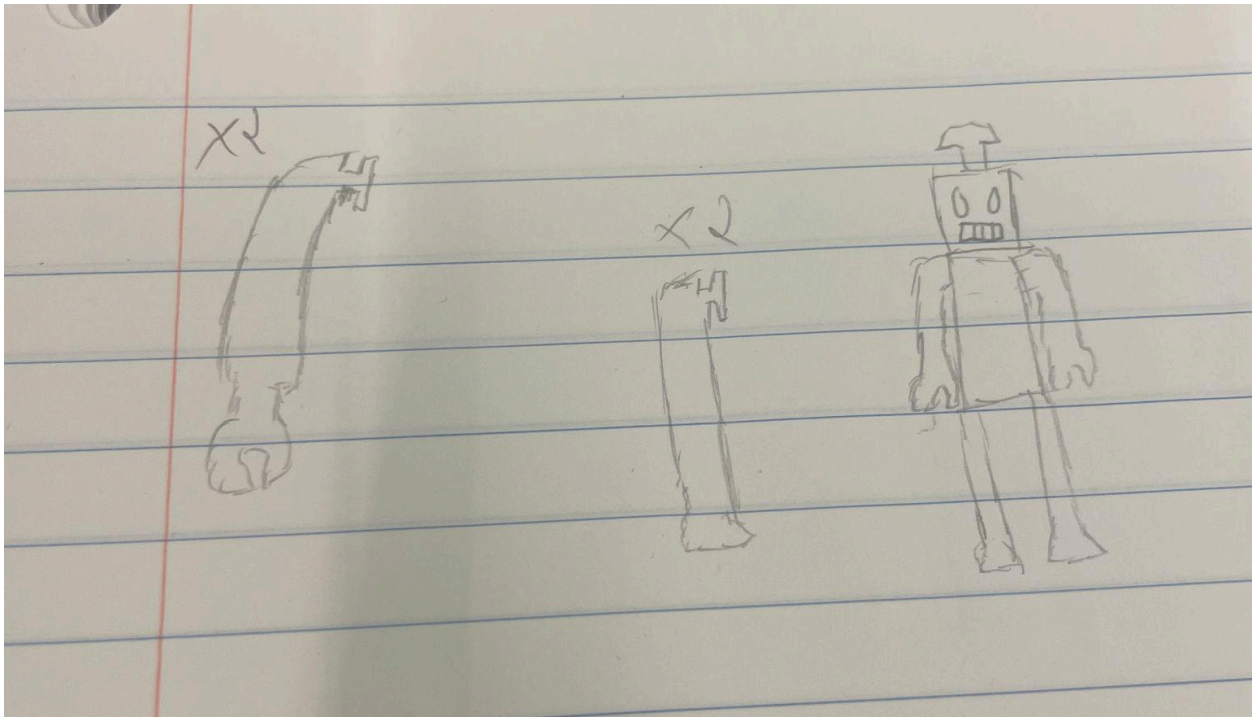

Figure A4 - Robot Toy

Types of manufacturing processes

Injection molding: $400 to $170,000 depending on the production level

Casting: $612 to $35,549 depending on the material per ton

Assembly: $50,000 to $75,000 for an automated assembly line

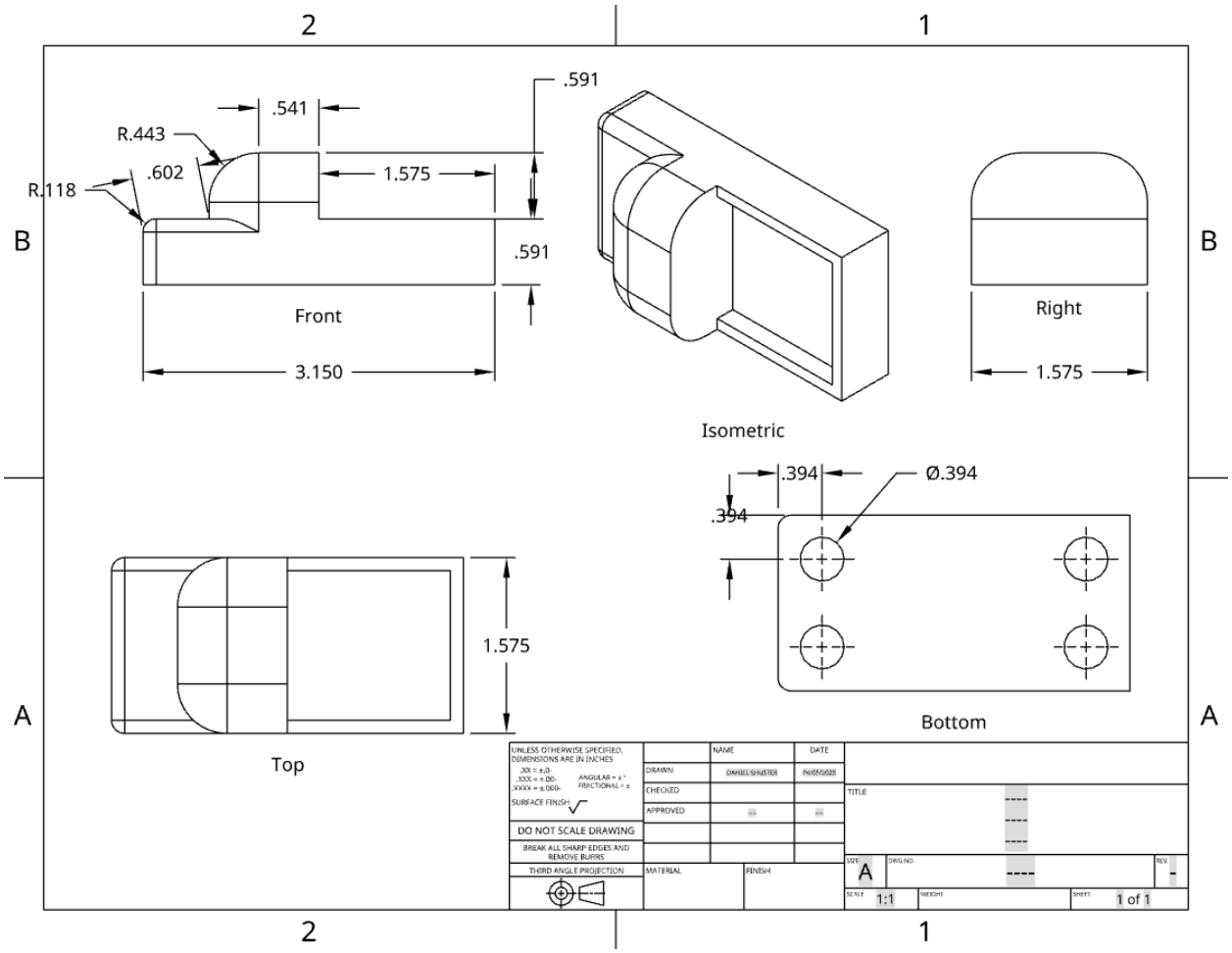

Figure B1 - Car Chassis

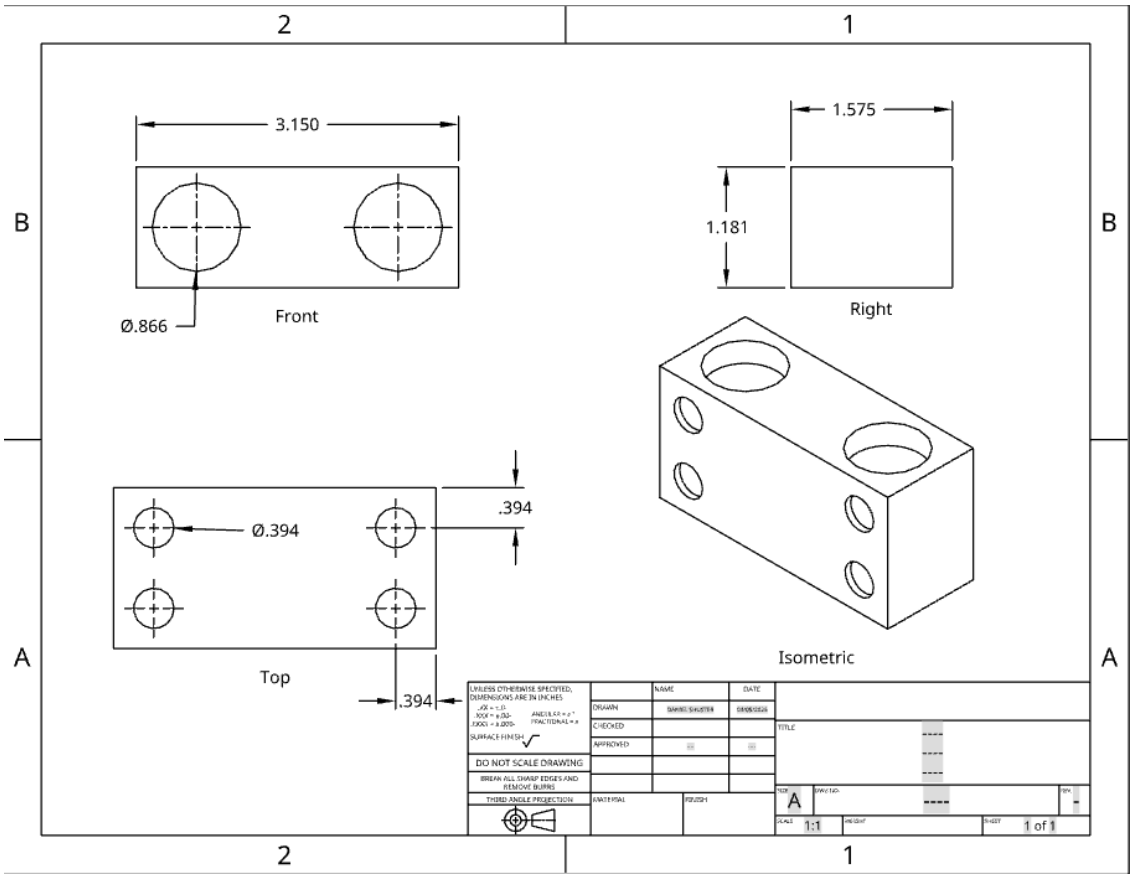

Figure B2 - Car Body

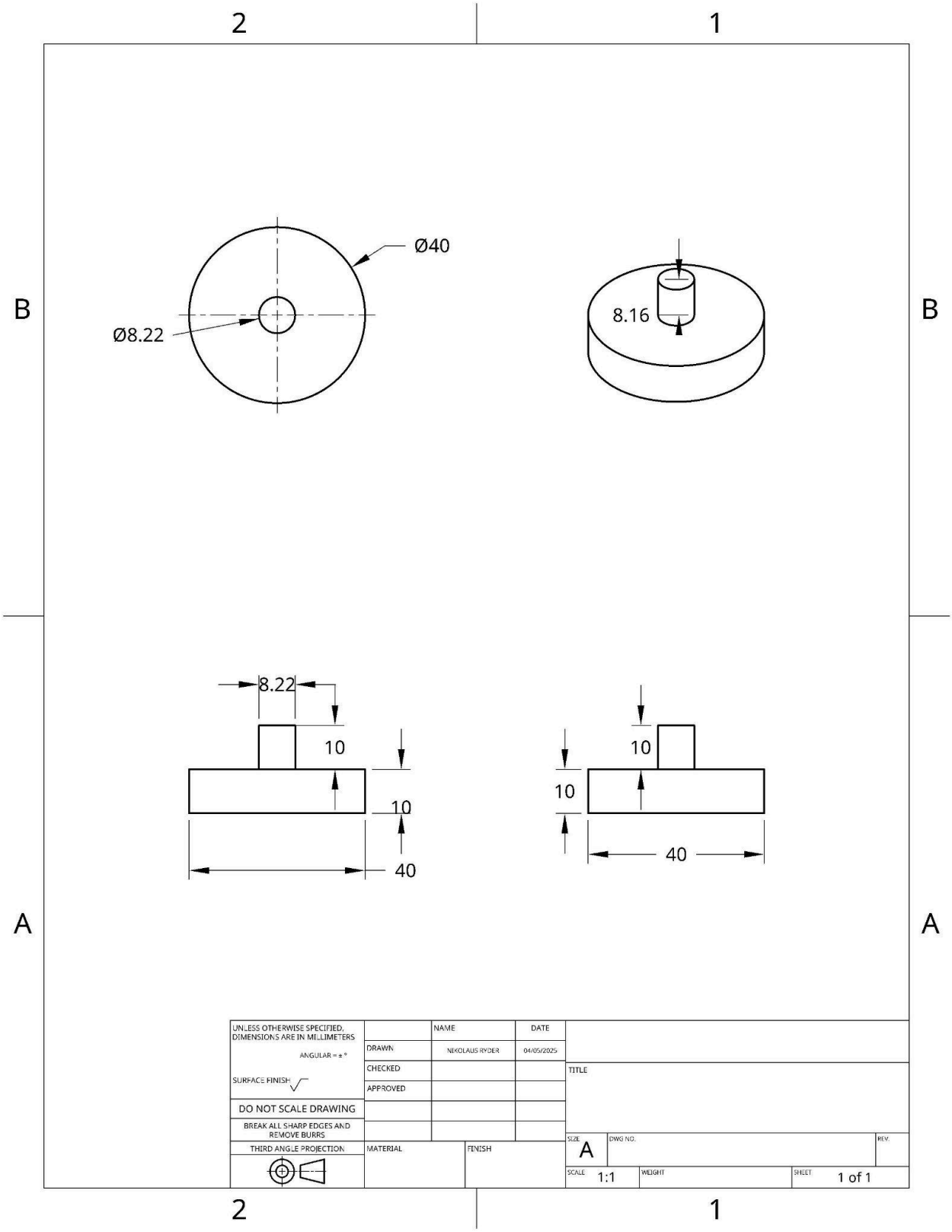

Figure B3 - Car Wheels

References

- Acuff, D. (2010). *What kids buy and why: The psychology of marketing to kids*. Simon and Schuster.

- Cañete, R. C., Picardo, A., Trueba, P., Torres, Y., & Peralta, E. (2024). A new multi-criteria decision-making approach for the design and selection of materials and manufacturing processes of toys for children with autism. *Materials Today Communications*, 109709.

- Children's toy design process based on the Kano-AHP-FBS model: Case of multisensory educational toys | IEEE conference publication | IEEE xplore. (n.d.-a). https://ieeexplore.ieee.org/document/10336473/

- da Silva Ferreira, Carla Sofia. (2014). In what extent can toy premiums promote healthy eating habits?: A study with school-age children (Order No. 30849311). Available from ProQuest Dissertations & Theses Global. (2956840723). Retrieved from http://ezproxy.rowan.edu/login?qurl=https%3A%2F%2Fwww.proquest.com%2Fdissertations-theses%2Fwhat-extent-can-toy-premiums-promote-healthy%2Fdocview%2F2956840723%2Fse-2%3Faccountid%3D13605

- Fernandes, S. A., & Coelho, D. A. (2013). Toy design: A methodological perspective. To appear in THE INTERNATIONAL JOURNAL OF DESIGNED OBJECTS, 7(1).

- Gao, H. H., Xing, X. C., & Fu, J. H. (2020). Design of popular science toys based on children's growth cognition law. In E3S web of conferences (Vol. 179, p. 02024). E3S Web of Conferences.

- Glazer, F. (2009). NPD: Kids' meal traffic slows as tykes pick from value menus. Nation's Restaurant News, 43(14), 16. Retrieved from http://ezproxy.rowan.edu/login?qurl=https%3A%2F%2Fwww.proquest.com%2Ftrade-journals%2Fnpd-kids-meal-traffic-slows-as-tykes-pick-value%2Fdocview%2F229336638%2Fse-2%3Faccountid%3D13605

- Heljakka, K. (2019, March). Toys and universal guidelines for design: a designerly perspective on playability of character toys. In *7th International Conference for Universal Design* (pp. 1-10).

- Kurnit, P. (2005). Responsible marketing to children in the US. *Young Consumers*, *6*(4), 8-12.

- Page, T., & Thorsteinsson, G. (2017). Designing Toys to Support Children's Development. Journal on Educational Psychology, 11(2), 1-10.

- Thangthong, P., Louhapensang, C., & Suttiwan, P. (2019). Factors in the Design of Good Toys for Kids Aged 0-3 Years. *Social Sciences*, *10*(5).

- Wang, Z., & Hong, D. (2022). Research on toy design based on children's education and experience. *Journal of the Korea Convergence Society*, *13*(5), 119-127.