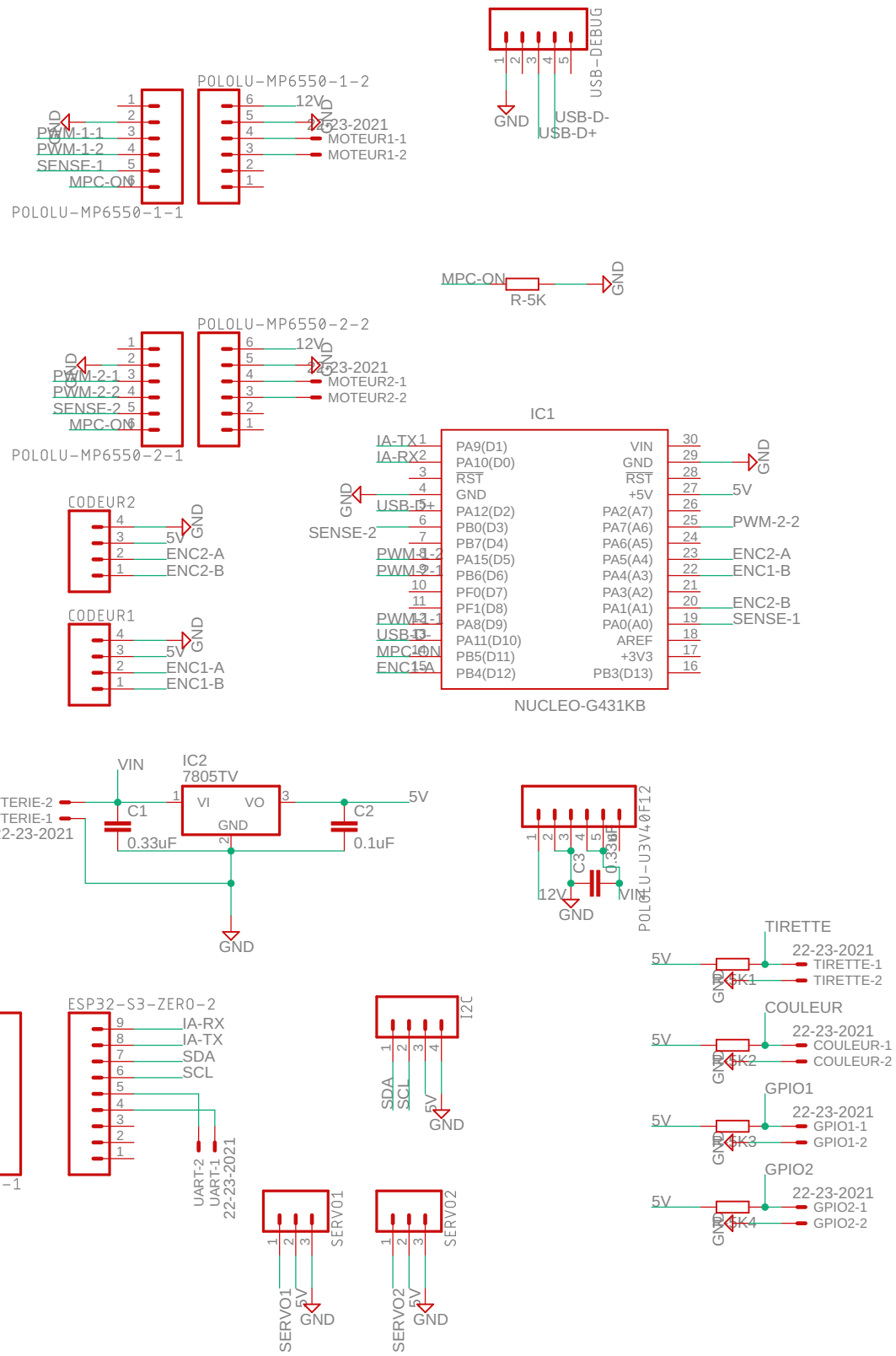

Date: 19/12/2024 20:52	
TITLE: asserv-pami	Sheet: 1/1