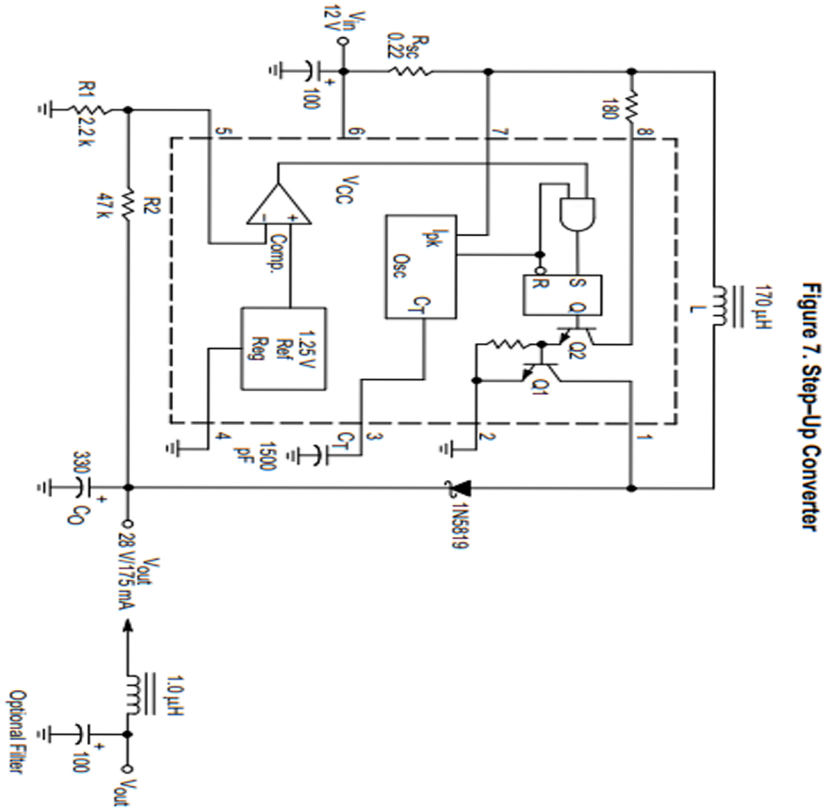
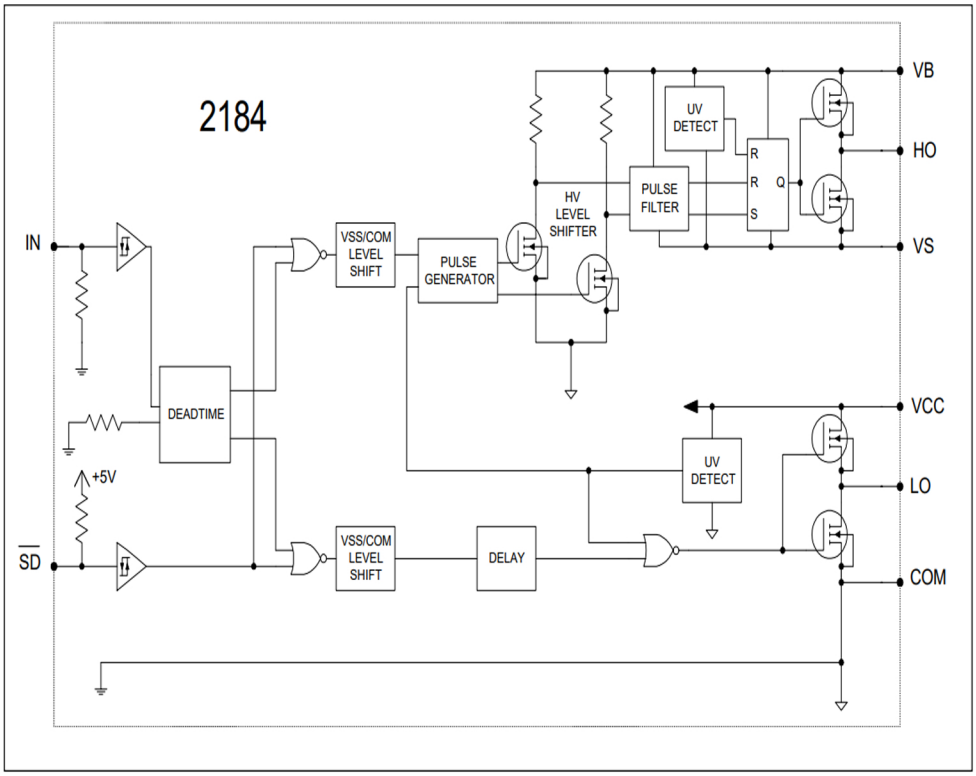
Figure 7. Step–Up Converter