Microprocessor Based Systems
CSE 312

Introduction to Embedded Systems
CSE 211

Textbooks – Hardware - Compiler

- Introduction to ARM Cortex- M Microcontroller, Jonathan Valvano
- Computers as Components, Wayne Wolf
- Hardware
  - Tiva LanuchPad TM4C123
- Compiler
  - Keil – ARM Compiler
- Instructor : Prof. Dr. Ashraf Salem
  - ashraf.salem@eng.asu.edu.eg

Course Contents

- <u>CSE 312 & CSE 211</u>
  1. ARM Cortex-M architecture
  2. ARM Cortex-M assembly Language
  3. TM4C123 Microcontroller
  4. Input and output ports
  5. SysTick Timer
  6. Serial and Parallel Interfaces
  7. Interrupt Programming
  8. Analog I/I Interface
  9. Real Time Operating System

موجود في العربيات عشان مثلاً يرد على الفرامل في $\frac{1}{2}$ ثانية {حاجة لازم الوقت يكون فيها مظبوط وإلا هتحصل مشكلة}

Embedded Systems

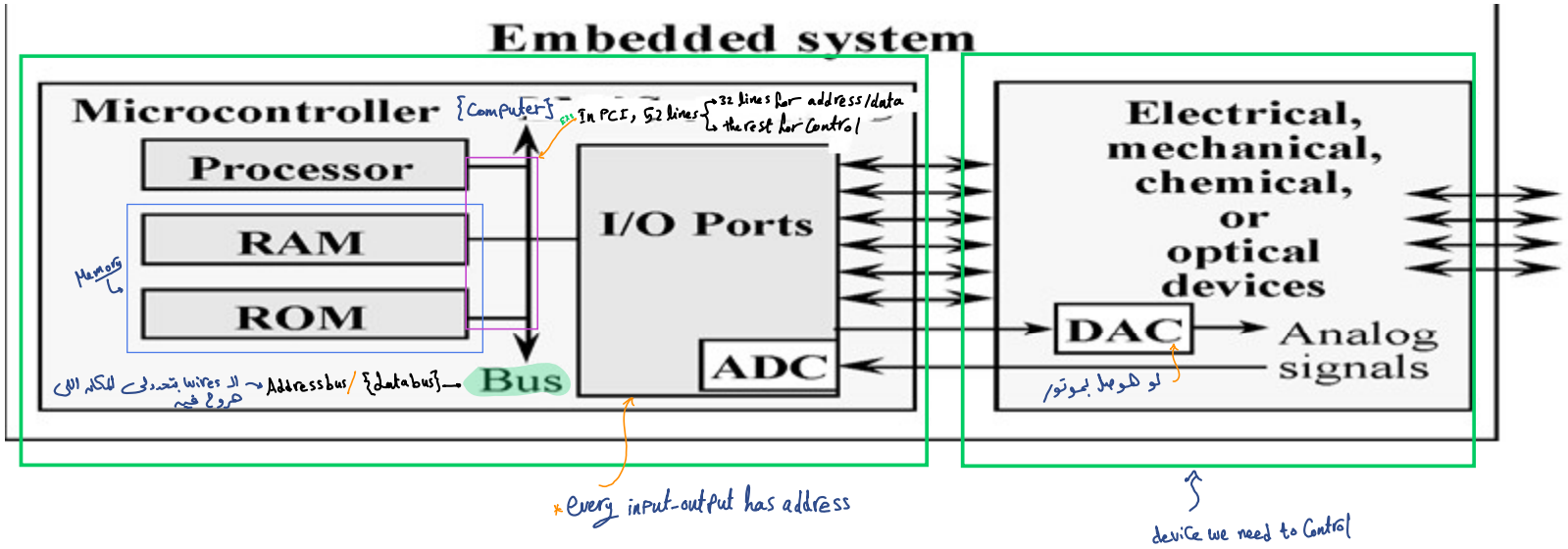

* عشان ينقل الـ Signal من device لـ Processor: ADC
* عشان ينقل Signal من Processor لـ device: DAC
* Access time أسرع من ROM of RAM

Microcontroller

- Processor – Instruction Set + memory + accelerators
- Memory
  - Non-Volatile
    - ROM
    - EPROM, EEPROM, Flash
  - Volatile
    - RAM (DRAM, SRAM)
- Interfaces
  - H/W: Ports
  - S/W: Device Driver
  - Parallel, Serial, Analog, Time

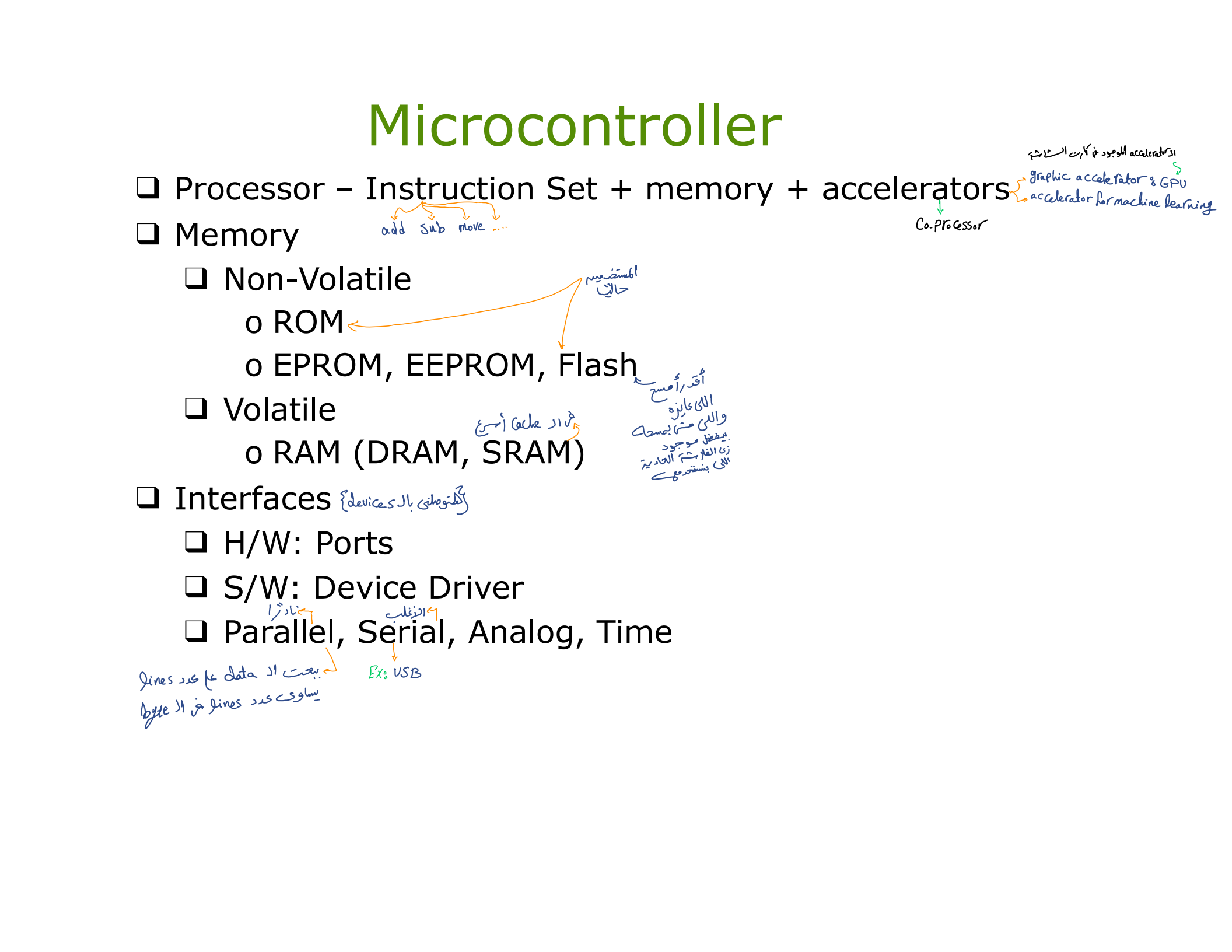

Embedded System Example GPS

- Moving map obtains position from GPS, paints map from local database.

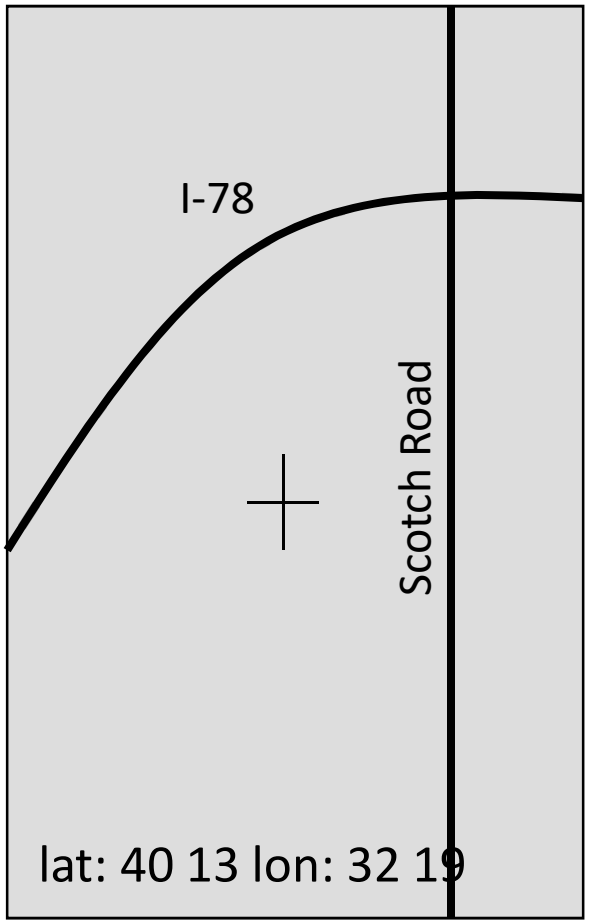

- GPS بتاخد خط الطول والعرض من Google map

GPS moving map block diagram

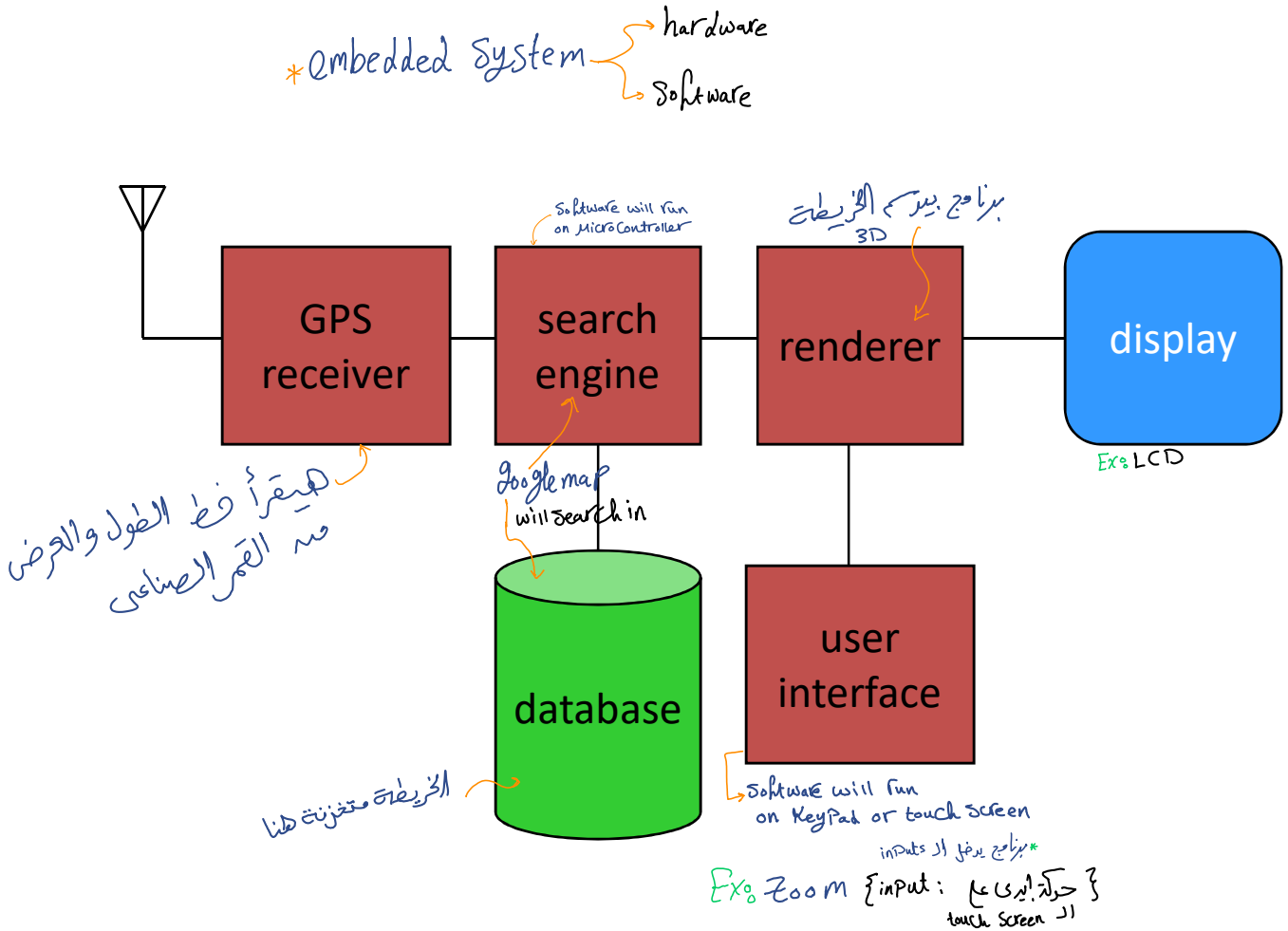

GPS moving map hardware architecture

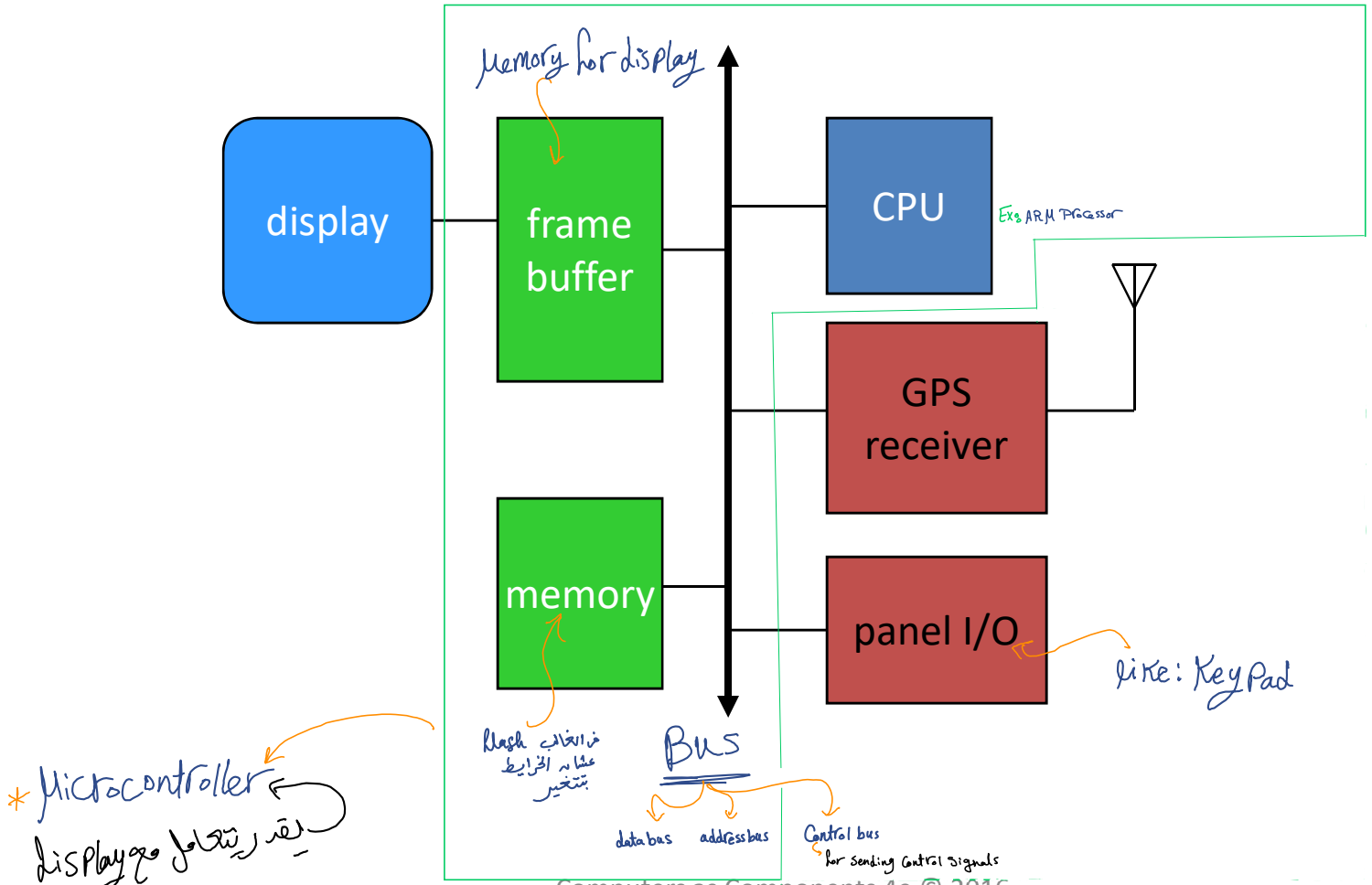
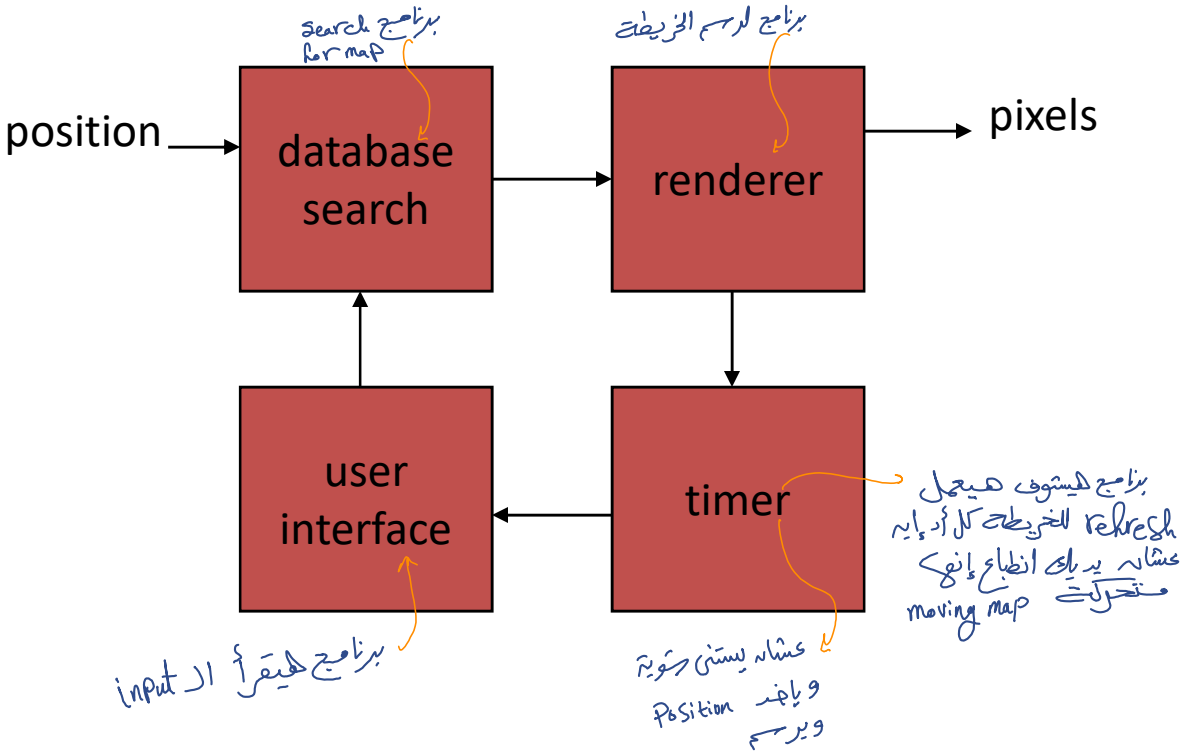
GPS moving map software architecture