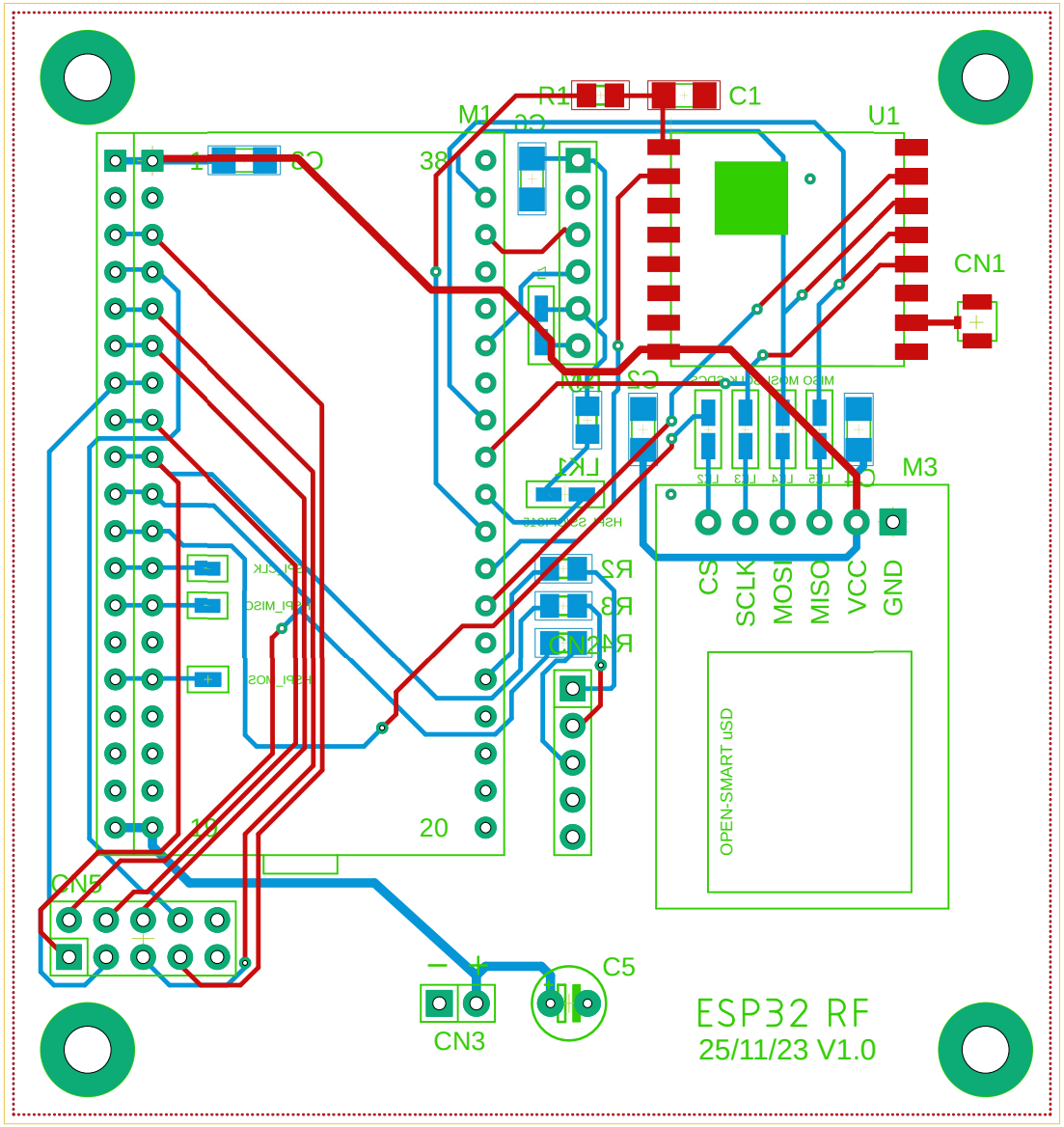
R1
C1
U1
M1
CN1
M3
CS
SCLK
MOSI
MISO
VCC
GND
OPEN-SMART uSD
38
20
1
10
CN5
CN3
C5
ESP32 RF
25/11/23 V1.0