(Embedded System Lab)
EXPERIMENT NO: 06

ROLL No:

AIM: Interfacing of a relay with any embedded core (8051, ARM).

Apparatus: Computer,Keil IDE software, Proteus Software, virtual IC 8051, Resistor, LED, Relay and Transistor (BC 547).

Theory:

A relay is **an electrically operated switch**. It consists of a set of input terminals for a single or multiple control signals, and a set of operating contact terminals. The switch may have any number of contacts in multiple contact forms, such as make contacts, break contacts, or combinations thereof.

Program:

```
#include <reg51.h>
sbit relay_pin = P2^0;     //sbit(single bit)=used to define a
                             single bit of a port.

void ms_delay(unsigned int);


void main()
{
  while(1)
   {
    relay_pin = 1; //Relay ON
    ms_delay(1000);
    relay_pin = 0; //Relay OFF
    ms_delay(1000);
   }
}

void ms_delay(unsigned int ms)
```

```
{
  unsigned int i,j;
 for(i=0;i<ms;i++)
    {
   for(j=0;j<100;j++){}
    }
}
```

Diagram:

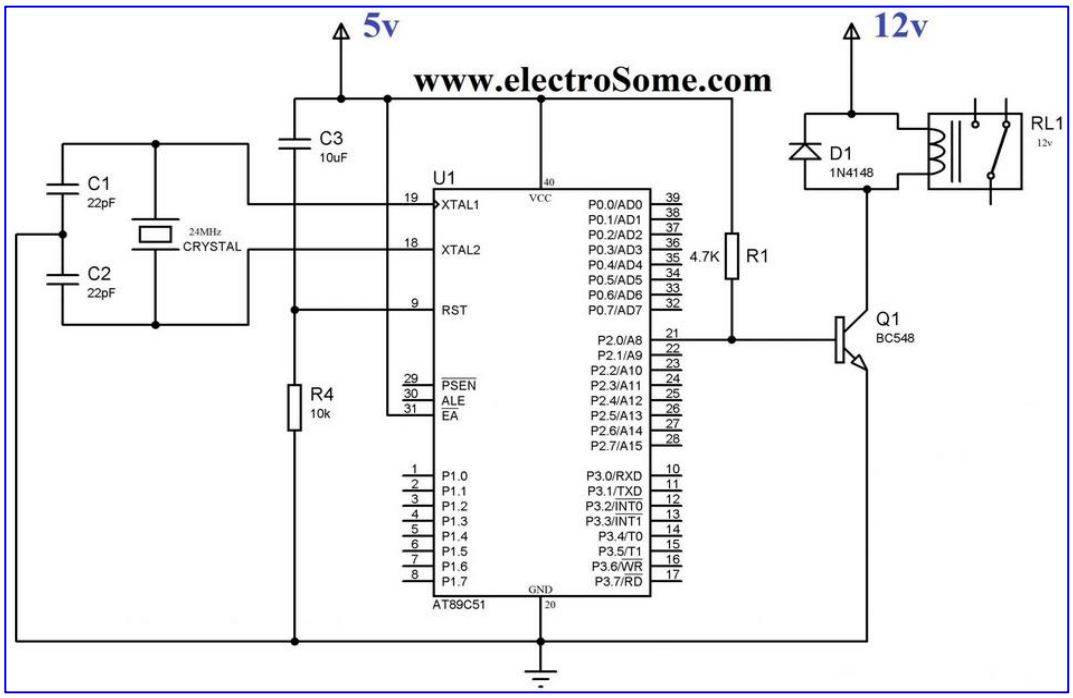

Scenario:

1) OFF Condition

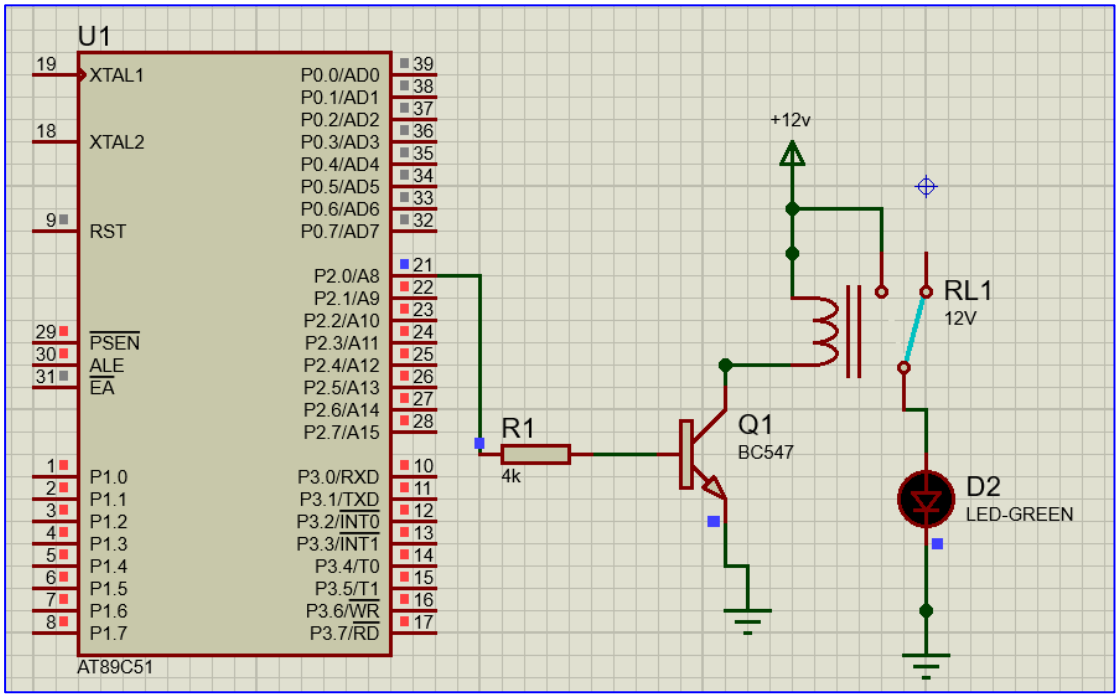

2) ON Condition

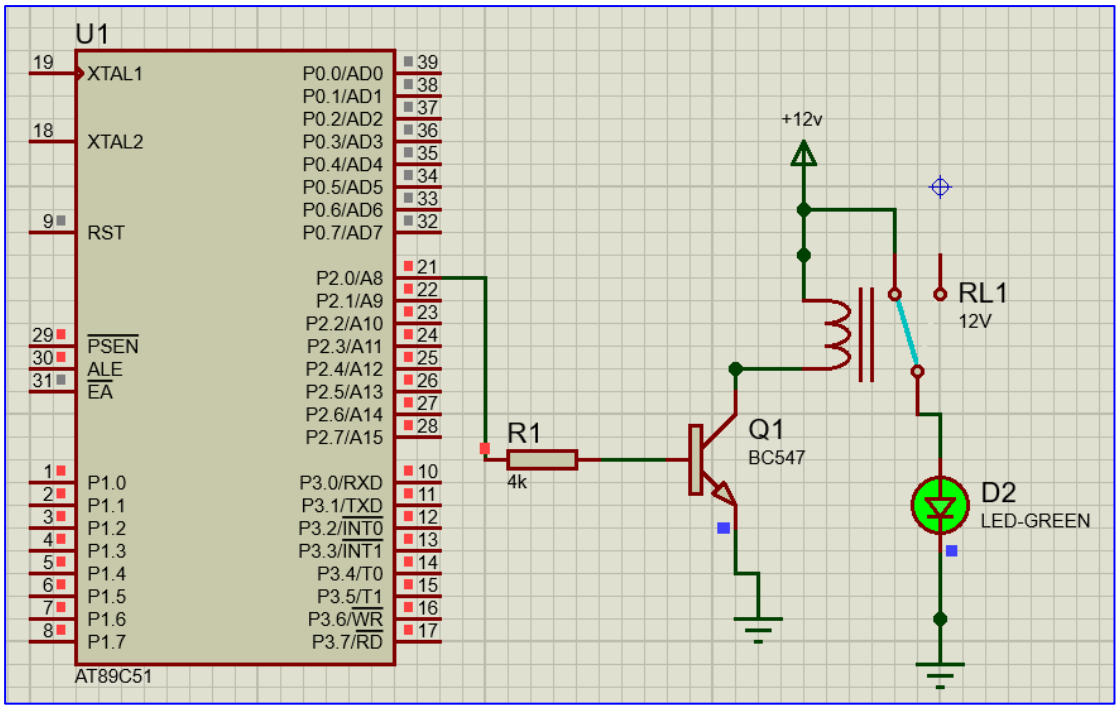

Conclusion:

In this experiment, we successfully developed a C program to control a lamp using a relay interfaced with an 8051 microcontroller. The program toggles the relay to turn the lamp ON and OFF, showcasing basic interfacing of external devices with the microcontroller. This experiment serves as a fundamental example of embedded systems programming for controlling electrical appliances with the 8051 microcontroller.