(Embedded System Lab)

Experiment No 1

Aim: Interfacing of LEDs /switches with any embedded core.
(8051/ARM/STM32, etc).

Apparatus: Computer, Proteus software, keil Software, Arduino IDE, virtual arduino, Virtual LED and Virtual resistor.

Theory: In this experiment, we will interface LEDs with an Arduino board. The Arduino's digital output pins will be used to control the LEDs. LEDs are connected to the output pins through current-limiting resistors to prevent excessive current flow through the LEDs.

1. Digital Output on Arduino:
Arduino microcontrollers have digital pins that can be configured as either input or output.

2. LEDs and Current-Limiting Resistors:
LEDs (Light Emitting Diodes) are semiconductor devices that emit light when current flows through them.
To prevent excessive current and protect the LED, a current-limiting resistor is connected in series with the LED.

3. Arduino Pins and Voltage Levels:
Arduino digital pins operate at logic levels, typically 0V (LOW) and 5V (HIGH).
When a digital pin is set to HIGH, it outputs 5V, and when set to LOW, it outputs 0V.

4. Setup and Loop Functions in Arduino:
The setup() function runs once when the Arduino starts and is used for initializing variables, pin modes, etc.
The loop() function runs repeatedly after the setup() and is where the main program logic resides.

5. pinMode and digitalWrite Functions:
The **pinMode**(pin, mode) function configures a specific pin as INPUT or OUTPUT.
The digitalWrite(pin, value) function sets the specified pin to HIGH or LOW (5V or 0V).

6. Delay Function:
The delay(ms) function pauses the program for a specified number of milliseconds, allowing time for human observation and avoiding rapid toggling of LEDs.

Program:

```
// Pin number for the LED
int ledPin = 12;  // Connect the LED pin to digital pin 12

void setup() {
  pinMode(ledPin, OUTPUT);
}

void loop() {
  // put your main code here to run repeatedly
  // Toggle the LED
  digitalWrite(ledPin, HIGH);
  delay(500);
  digitalWrite(ledPin, LOW);
  delay(500);
}
```

Diagram:

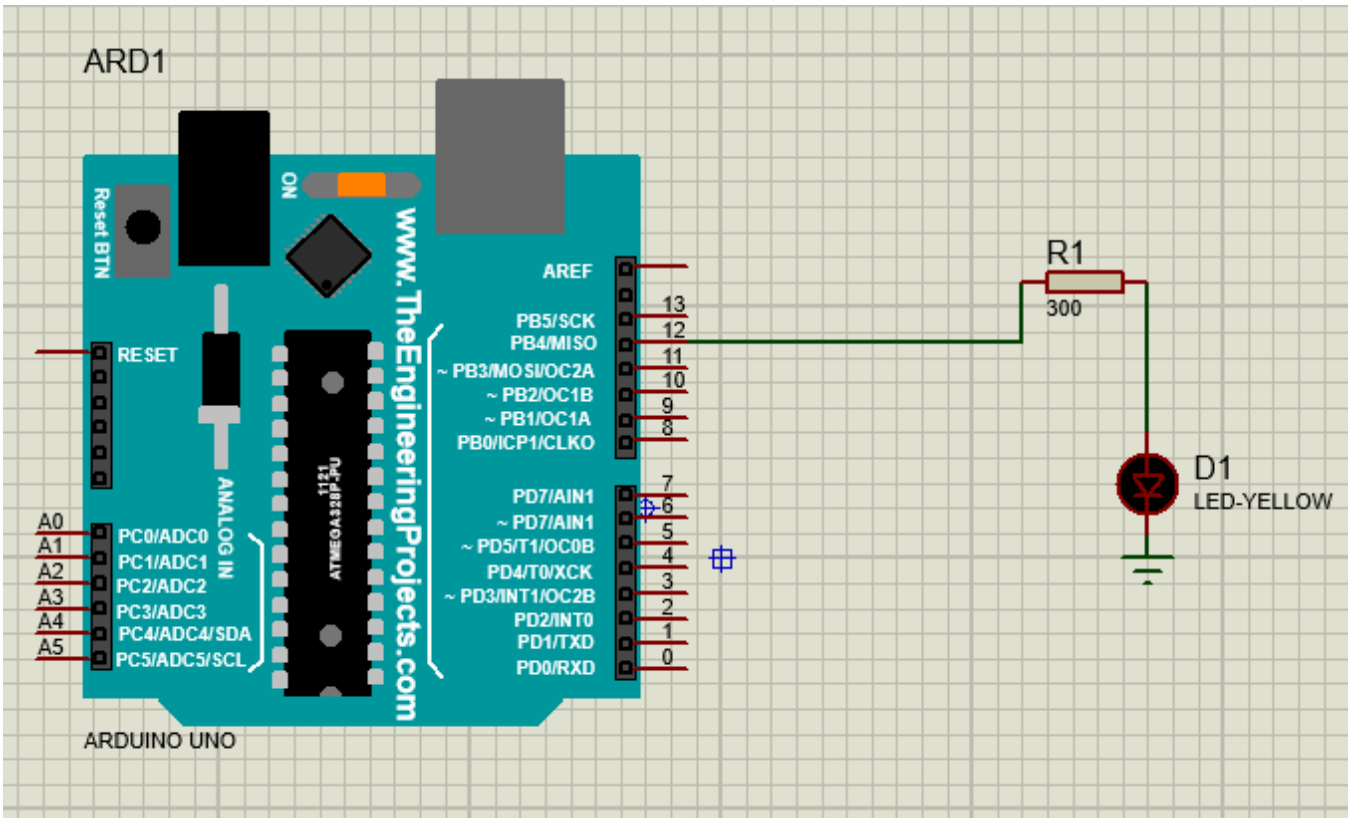

Conclusion:

Interfacing LEDs with an Arduino board is a simple and effective way to understand digital output control. The Arduino platform provides an easy-to-use environment to work with embedded systems and learn the basics of programming and hardware interfacing.

Also the practical exercise provides a hands-on introduction to basic embedded systems concepts, Arduino programming, and hardware interfacing. It lays the groundwork for future exploration and experimentation in the exciting field of embedded systems development.