(Embedded System Lab)

Experiment No 2

Aim: Interfacing of Seven segment display with any embedded core.

Apparatus: Computer, Proteus software, Arduino IDE, virtual Seven Segment, and Virtual resistor.

Theory: An LED or Light Emitting Diode, is a solid state optical pn-junction diode which emits light energy in the form of photons.

The displays common pin is generally used to identify which type of 7-segment display it is. As each LED has two connecting pins, one called the “Anode” and the other called the “Cathode”, there are therefore two types of LED 7-segment display called: **Common Cathode (CC) and Common Anode (CA).**

A seven-segment display is a simple, cost-effective electronic display device that can display decimal numerals. Each segment is controlled individually, and by turning on/off specific segments, you can display different numbers (0-9) and a few characters (like A-F for hex displays).

Common cathode displays have a shared cathode (-) for all segments, and each segment is controlled by applying a positive voltage. Common anode displays work the opposite way, with a shared anode (+).

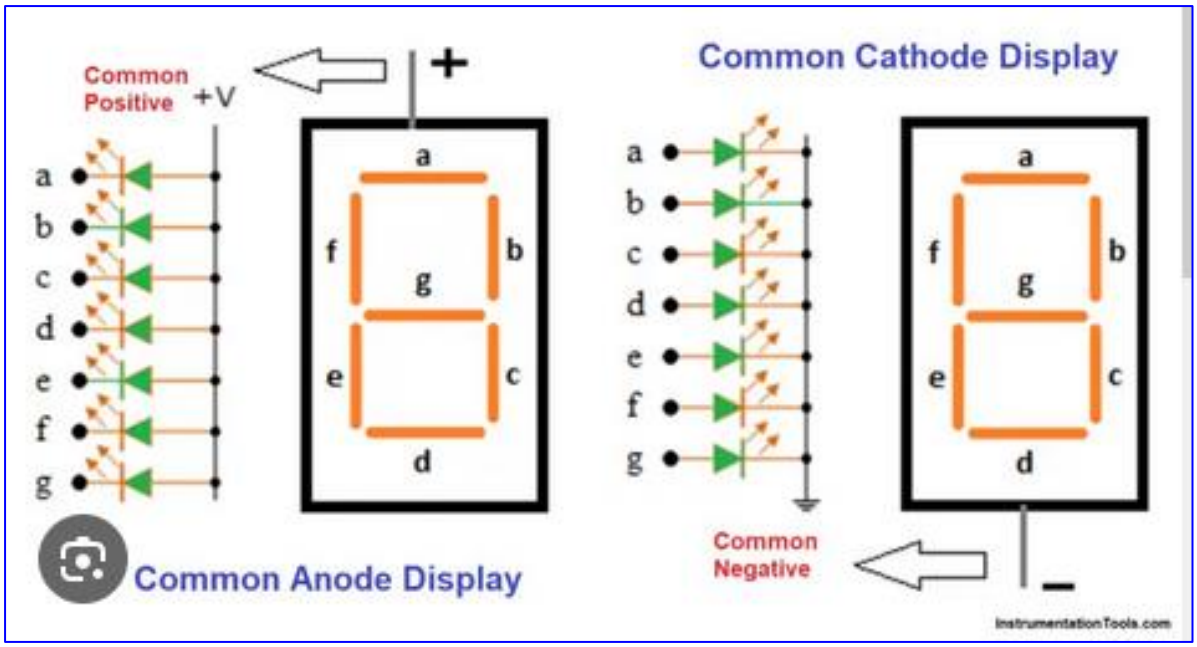

Program:

```
void setup() {

pinMode(2,OUTPUT);     //to configure a specific pin as either an input or an output.
pinMode(3,OUTPUT);     // pin: The number of the pin you want to configure.
pinMode(4,OUTPUT);    // mode: The mode you want to set for the specified pin
                          (INPUT or OUTPUT).
pinMode(5,OUTPUT);
pinMode(6,OUTPUT);
pinMode(7,OUTPUT);
pinMode(8,OUTPUT);

}

void loop() {
  // put your main code here, to run repeatedly:
zero();
one();
two();
three();
four();
five();
six();
seven();
eight();
nine();
}
void zero() {
  digitalWrite(2,HIGH);
  digitalWrite(3,HIGH);
  digitalWrite(4,HIGH);
  digitalWrite(5,HIGH);
  digitalWrite(6,HIGH);
  digitalWrite(7,HIGH);
  digitalWrite(8,LOW);
  delay(1000);
}
void one(){
  digitalWrite(2,LOW);
  digitalWrite(3,HIGH);
  digitalWrite(4,HIGH);
  digitalWrite(5,LOW);
  digitalWrite(6,LOW);
```

```
  digitalWrite(7,LOW);
  digitalWrite(8,LOW);
  delay(1000);

}

void two() {
  digitalWrite(2,HIGH);
  digitalWrite(3,HIGH);
  digitalWrite(4,LOW);
  digitalWrite(5,HIGH);
  digitalWrite(6,HIGH);
  digitalWrite(7,LOW);
  digitalWrite(8,HIGH);
  delay(1000);
}

 void three() {
  digitalWrite(2,HIGH);
  digitalWrite(3,HIGH);
  digitalWrite(4,HIGH);
  digitalWrite(5,HIGH);
  digitalWrite(6,LOW);
  digitalWrite(7,LOW);
  digitalWrite(8,HIGH);
  delay(1000);

 }

void four() {
  digitalWrite(2,LOW);
  digitalWrite(3,HIGH);
  digitalWrite(4,HIGH);
  digitalWrite(5,LOW);
  digitalWrite(6,LOW);
  digitalWrite(7,HIGH);
  digitalWrite(8,HIGH);
  delay(1000);

}

void five() {
  digitalWrite(2,HIGH);
  digitalWrite(3,LOW);
  digitalWrite(4,HIGH);
  digitalWrite(5,HIGH);
  digitalWrite(6,LOW);
```

```
  digitalWrite(7,HIGH);
  digitalWrite(8,HIGH);
  delay(1000);

}
void six() {
  digitalWrite(2,HIGH);
  digitalWrite(3,LOW);
  digitalWrite(4,HIGH);
  digitalWrite(5,HIGH);
  digitalWrite(6,HIGH);
  digitalWrite(7,HIGH);
  digitalWrite(8,HIGH);
  delay(1000);
}

void seven() {
  digitalWrite(2,HIGH);
  digitalWrite(3,HIGH);
  digitalWrite(4,HIGH);
  digitalWrite(5,LOW);
  digitalWrite(6,LOW);
  digitalWrite(7,LOW);
  digitalWrite(8,LOW);
  delay(1000);
  }
void eight() {
  digitalWrite(2,HIGH);
  digitalWrite(3,HIGH);
  digitalWrite(4,HIGH);
  digitalWrite(5,HIGH);
  digitalWrite(6,HIGH);
  digitalWrite(7,HIGH);
  digitalWrite(8,HIGH);
  delay(1000);
 }

void nine() {
  digitalWrite(2,HIGH);
  digitalWrite(3,HIGH);
  digitalWrite(4,HIGH);
  digitalWrite(5,HIGH);
  digitalWrite(6,LOW);
  digitalWrite(7,HIGH);
  digitalWrite(8,HIGH);
  delay(1000);
}
```

Out put Diagram:

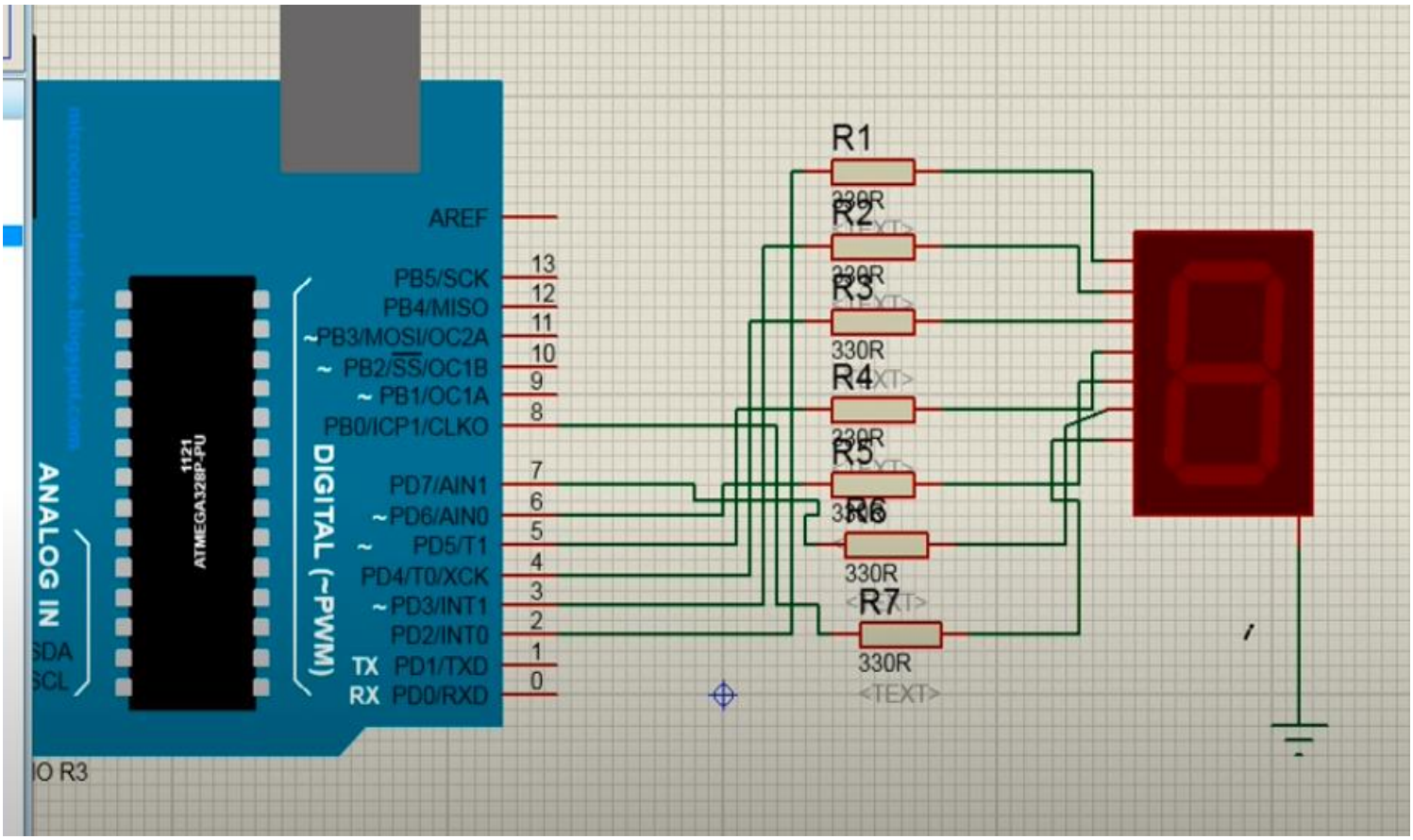

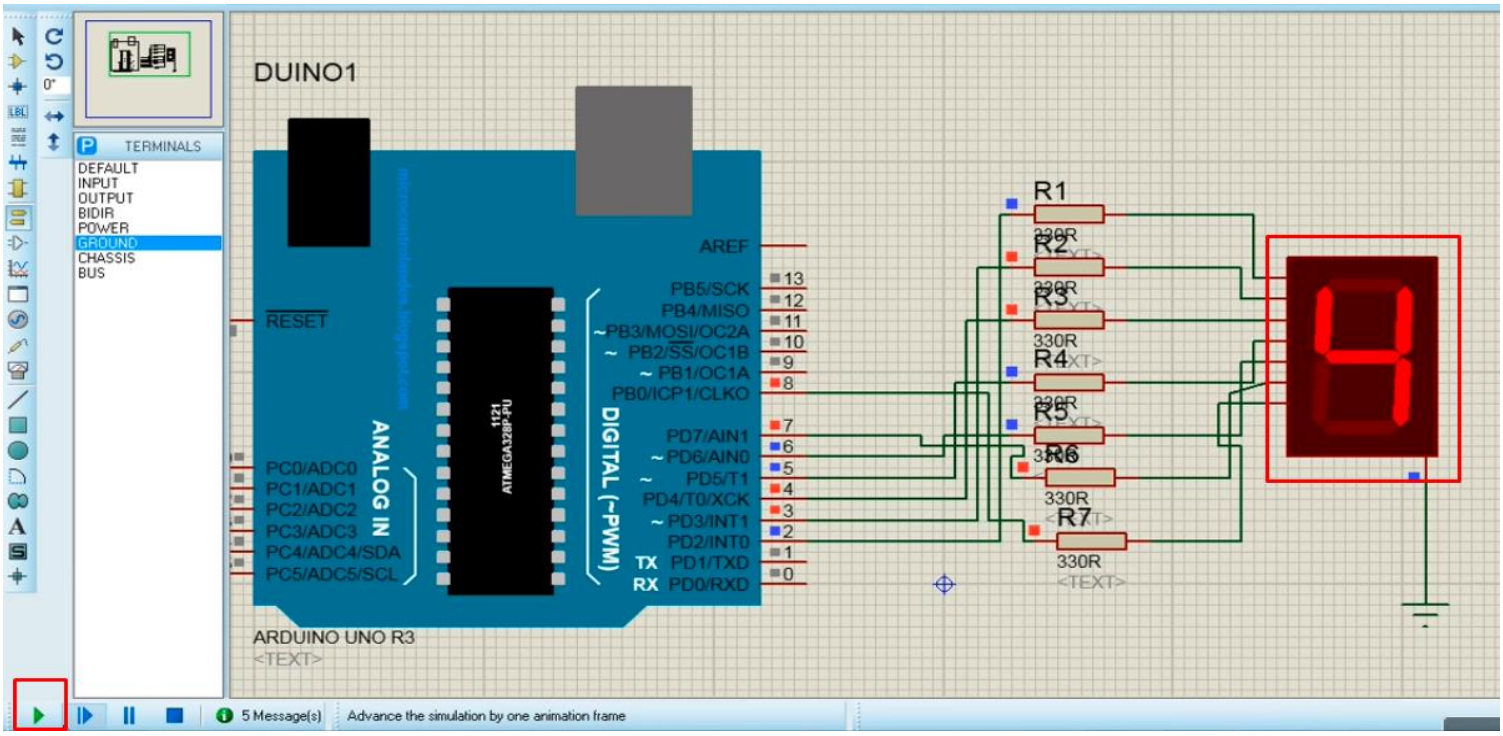

Conclusion:

Through a simple Arduino program, we instructed the board to light up specific segments to represent each digit. This experiment introduced us to Proteus setup, Arduino programming, and the concept of interfacing components to create a simple digital display using Proteus software.