Homework3: Digital Integrated Circuits　　314510148 電子所碩一 翁瑄妤

1. Timing/Area Analysis of Sequential Circuits

1.1 Use Verilog to implement a kernel that supports 3×3 convolution (stride=1), 2×2 average pooling (stride=2), and activation function (Leakey ReLU) without using any pipeline techniques. Verify the functionality of your design through gate-level simulation using the test patterns provided by the TA, and then measure the area and throughput of your design. You can modify the clock period in the .tcl file and the pattern file as needed. Ensure that your design passes all test patterns.

(1) 流程圖

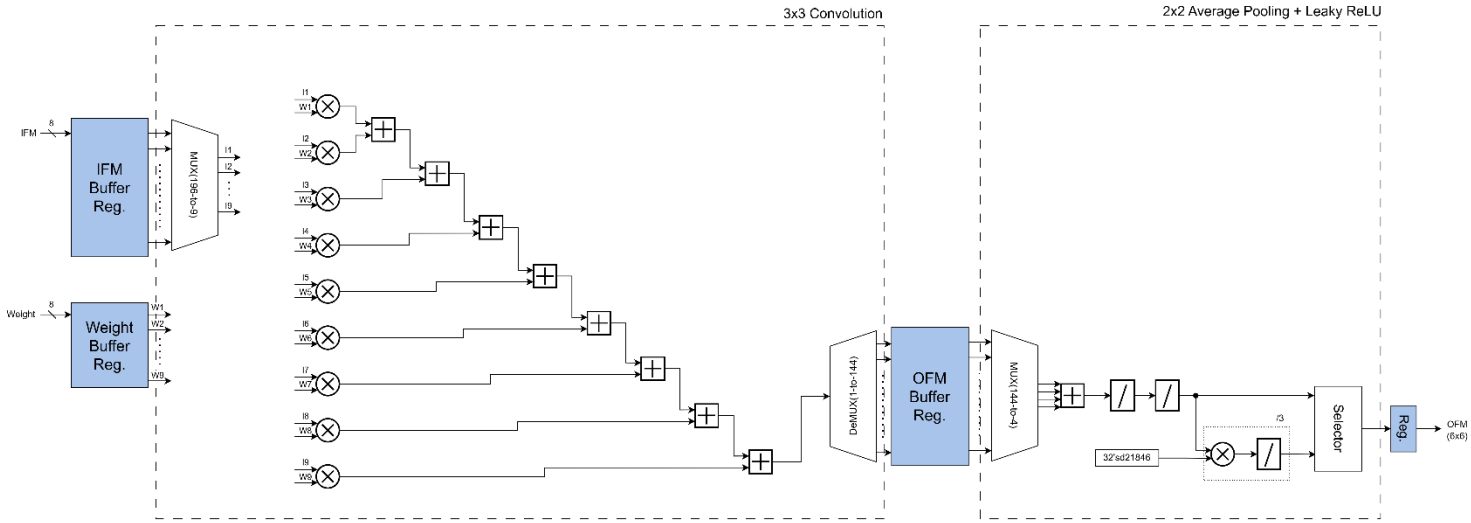

(2) 架構流程

a. Input 階段（IDLE）

- in_valid = 1 持續送入 In_IFM 與前 9 個 cycle 的 In_Weight。
- input_cnt 遞增、把像素寫入完整的 IFM_Buffer[14×14]，把權重寫入 Weights[0..8]。
- input_cnt 到達設定值（代表 IFM 與 Weights 已寫入完整）→ 進入 Convolution 階段。

b. Convolution 階段（CONV）

- 由 IFM_Buffer 的 index 隨 row_cnt/col_cnt 取出 3×3。
- 一次在一個位置上做 9 個乘法並累加 → 把結果寫入 OFM_Buffer [12×12]（保留整個 12×12 OFM）。
- 當所有 12×12 計算完成 → 進入 pooling 階段。

c. Average Pooling 階段（AVR_POOL）

- 對 OFM_Buffer 每個 2×2 區塊 sum → 除以 4 → truncate/fixed-point 處理（LeakyReLU）→ 寫入 OFM_Pool_Buffer [6×6]。
- pool 完成後 → 進入輸出階段。

d. Output 階段（OUTPUT）

- 逐個讀 OFM_Pool_Buffer，在每個 cycle 輸出到 Out_OFM 並 assert out_valid，直到 6x6 全部傳完。
- 完成後回 IDLE 狀態等下一批輸入。

(3) 01_RTL

```
PASS PATTERN NO. 993, execution cycle :  235,
PASS PATTERN NO. 994, execution cycle :  235,
PASS PATTERN NO. 995, execution cycle :  235,
PASS PATTERN NO. 996, execution cycle :  235,
PASS PATTERN NO. 997, execution cycle :  235,
PASS PATTERN NO. 998, execution cycle :  235,
PASS PATTERN NO. 999, execution cycle :  235,
**********************************************************************
*                          Congratulations!                          *
*  Your execution cycles =             470000   cycles               *
*  Your clock period     =                2.000 ns                   *
*  Total Latency         =            940000.00 ns                   *
**********************************************************************
Simulation complete via $finish(1) at time 486024 NS + 0
./PATTERN.v:348   $finish;
ncsim> exit
9:28 ea25dic073@ee25[~/hw3/00_TESTBED]$
```

(4) 02_SYN

```
  data arrival time                                                1982.42

  clock clk (rise edge)                                 2000.00    2000.00
  clock network delay (ideal)                              0.00    2000.00
  OFM_Pool_Buffer_reg_0__5__13_/CLK (ASYNC_DFFHx1_ASAP7_75t_R)
                                                           0.00    2000.00 r
  library setup time                                     -16.24    1983.76
  data required time                                               1983.76
  ---------------------------------------------------------------------------
  data required time                                               1983.76
  data arrival time                                               -1982.42
  ---------------------------------------------------------------------------
  slack (MET)                                                         1.34


1
exit

Thank you...
9:32 ea25dic073@ee25[~/hw3/02_SYN]$
```

```
  Number of ports:                          1467
  Number of nets:                          72922
  Number of cells:                         71280
  Number of combinational cells:           64459
  Number of sequential cells:               6794
  Number of macros/black boxes:                0
  Number of buf/inv:                        8895
  Number of references:                       82

  Combinational area:               65643.359556
  Buf/Inv area:                      6772.818324
  Noncombinational area:            41207.512053
  Macro/Black Box area:                 0.000000
  Net Interconnect area:      undefined  (No wire load specified)

  Total cell area:                 106850.871609
  Total area:                 undefined
  1
```

Period (ps)	Latency (cycles)	Area (um^2)	Throughput (GOPS)	Area efficiency (GOPS/mm^2)
2000	235	106851	5.59	52.33

(5) 03_GATE

```
PASS PATTERN NO. 990, execution cycle :  235,
PASS PATTERN NO. 991, execution cycle :  235,
PASS PATTERN NO. 992, execution cycle :  235,
PASS PATTERN NO. 993, execution cycle :  235,
PASS PATTERN NO. 994, execution cycle :  235,
PASS PATTERN NO. 995, execution cycle :  235,
PASS PATTERN NO. 996, execution cycle :  235,
PASS PATTERN NO. 997, execution cycle :  235,
PASS PATTERN NO. 998, execution cycle :  235,
PASS PATTERN NO. 999, execution cycle :  235,
**********************************************************************
*                          Congratulations!                          *
*  Your execution cycles =            470000   cycles               *
*  Your clock period     =               2.000 ns                   *
*  Total Latency         =            940000.00 ns                  *
**********************************************************************
Simulation complete via $finish(1) at time 486024 NS + 0
../00_TESTBED/PATTERN.v:348   $finish;
ncsim> exit
9:36 ea25dic073@ee25[~/hw3/03_GATE]$
```

1.2 Use Verilog to implement a kernel that supports 3×3 convolution (stride=1), 2×2 average pooling (stride=2), and activation function (Leakey ReLU) with pipeline techniques. Verify the functionality of your design through gate-level simulation using the test patterns provided by the TA, and then measure the area and throughput of your design. You can modify the clock period in the .tcl file and the pattern file as needed. Your design must operate at a frequency higher than 1.05 GHz to earn points according to the following scale:

- ≥ 1.05 GHz → 10 points
- ≥ 1.32 GHz → 20 points
- ≥ 1.48 GHz → 30 points

Ensure that your design passes all test patterns.

(1) 流程圖

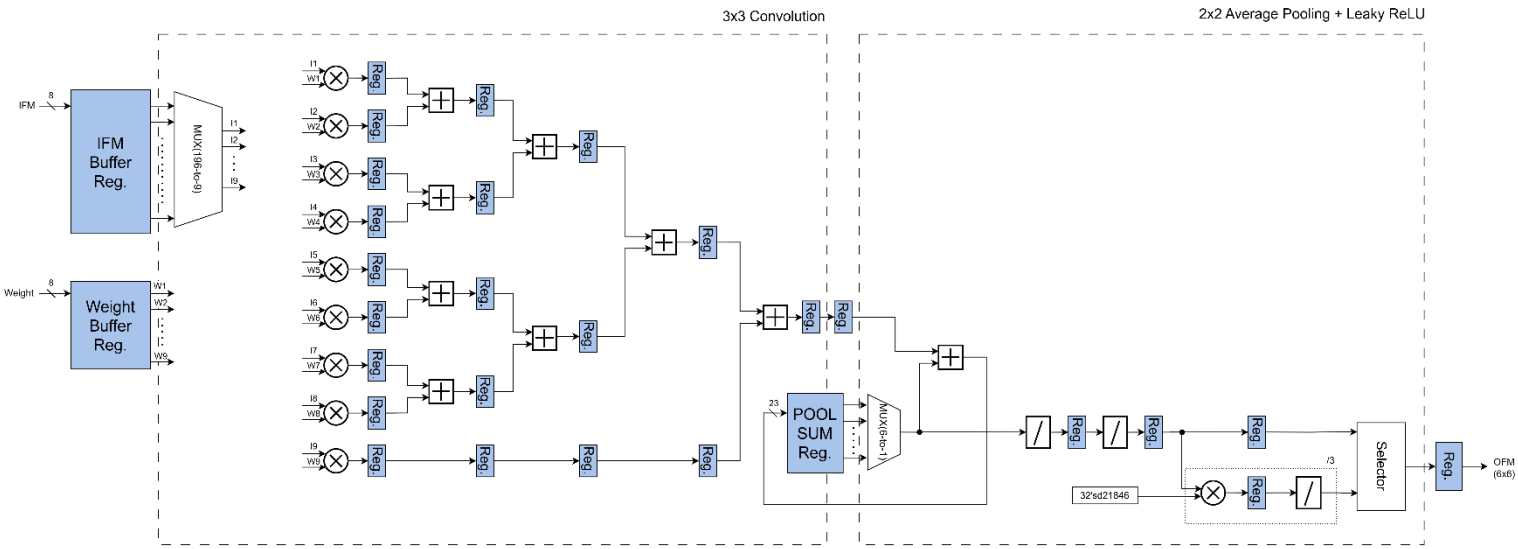

(2) 架構流程

a. Input 階段（Input / Shift）

- 把新 element 依序推入一個 31-element shift register，由這個 shift

register 直接供應 sliding window（3x3）所需的 9 個數值（不保存整個 14x14）。

- input_cnt 決定何時能形成第一個完整 3x3 窗口，以及何時停止接受新批次的輸入。

b. Convolution 階段

- 當 sliding window 準備好且 wait_flag（邊界處理）為 0，9 個 DW02_mult 同時計算 9 個乘積 → result 為 mul_r0..mul_r8。
- 同時把當前 row/col 記入 row_pipe[0]/col_pipe[0]，assert conv_valid_pipe[0]
- 把 9 個乘積分組相加（多段加法 pipeline），每段只做少量加法以降低 combinational delay → 最終得到 OFM_curr（Convolution 輸出）。
- 將對應的 row/col 經過同樣 pipeline 延遲（row_pipe/col_pipe），確保 OFM_curr 與座標對齊。

c. Average Pooling 階段

- 當 OFM_curr 開始有有效值後 (conv_valid_pipe 後段)，立即把該值累加到對應的 pooling cell（以 prow = row>>1, pcol = col>>1 決定）。每個 pool cell 維護一個 POOL_SUM 與 POOL_CNT，當 POOL_CNT 到 4 時：

  做平均 → 去掉 fractional bits → LeakyReLU → 寫入 OFM_Pool_Buffer。

  這樣 pooling 與 conv 可同步前進，不需先儲存整個 OFM。

d. Output 階段

- 在 input_cnt 到達輸出階段範圍時，逐個讀 OFM_Pool_Buffer 並輸出 Out_OFM 並 assert out_valid。

(3) 01_RTL

```
PASS PATTERN NO. 990, execution cycle :  208,
PASS PATTERN NO. 991, execution cycle :  208,
PASS PATTERN NO. 992, execution cycle :  208,
PASS PATTERN NO. 993, execution cycle :  208,
PASS PATTERN NO. 994, execution cycle :  208,
PASS PATTERN NO. 995, execution cycle :  208,
PASS PATTERN NO. 996, execution cycle :  208,
PASS PATTERN NO. 997, execution cycle :  208,
PASS PATTERN NO. 998, execution cycle :  208,
PASS PATTERN NO. 999, execution cycle :  208,
**************************************************************************
*                         Congratulations!                               *
*  Your execution cycles =             416000   cycles                   *
*  Your clock period     =                0.675 ns                       *
*  Total Latency         =            280800.00 ns                       *
**************************************************************************
Simulation complete via $finish(1) at time 146024112 PS + 0
./PATTERN.v:348   $finish;
ncsim> exit
17:05 ea25dic073@ee25[~/hw3/00_TESTBED]$
```

(4) 02_SYN

```
  data arrival time                                                    655.20

  clock clk (rise edge)                                   675.00       675.00
  clock network delay (ideal)                               0.00       675.00
  avg_q86_reg_19_/CLK (ASYNC_DFFHx1_ASAP7_75t_R)            0.00       675.00 r
  library setup time                                      -19.43       655.57
  data required time                                                   655.57
  ---------------------------------------------------------------------------
  data required time                                                   655.57
  data arrival time                                                   -655.20
  ---------------------------------------------------------------------------
  slack (MET)                                                            0.37


1
exit

Thank you...
17:05 ea25dic073@ee25[~/hw3/02_SYN]$
```

```
Number of ports:                          1023
Number of nets:                          14687
Number of cells:                         13598
Number of combinational cells:           11991
Number of sequential cells:               1586
Number of macros/black boxes:                0
Number of buf/inv:                        2068
Number of references:                       67

Combinational area:               13279.930629
Buf/Inv area:                      1579.772177
Noncombinational area:             9593.173375
Macro/Black Box area:                 0.000000
Net Interconnect area:      undefined  (No wire load specified)

Total cell area:                  22873.104005
Total area:                 undefined
1
```

Period (ps)	Latency (cycles)	Area (um^2)	Throughput (GOPS)	Area efficiency (GOPS/mm^2)
675 (1.481GHz)	208	22873	18.71	818.34

(5) 03_GATE

```
PASS PATTERN NO. 989, execution cycle :  208,
PASS PATTERN NO. 990, execution cycle :  208,
PASS PATTERN NO. 991, execution cycle :  208,
PASS PATTERN NO. 992, execution cycle :  208,
PASS PATTERN NO. 993, execution cycle :  208,
PASS PATTERN NO. 994, execution cycle :  208,
PASS PATTERN NO. 995, execution cycle :  208,
PASS PATTERN NO. 996, execution cycle :  208,
PASS PATTERN NO. 997, execution cycle :  208,
PASS PATTERN NO. 998, execution cycle :  208,
PASS PATTERN NO. 999, execution cycle :  208,
****************************************************************************
*                          Congratulations!                                *
*  Your execution cycles =             416000   cycles                     *
*  Your clock period     =                0.675 ns                         *
*  Total Latency         =             280800.00 ns                        *
****************************************************************************
Simulation complete via $finish(1) at time 146024112 PS + 0
../00_TESTBED/PATTERN.v:348   $finish;
ncsim> exit
17:07 ea25dic073@ee25[~/hw3/03_GATE]$
```

2. Optimize the Sequential Circuits

Optimize the area efficiency (Throughput/Area) of your design in 1. You can adjust components such as buffers, multiplexers, multipliers, dividers, and other modules as needed. Please clearly describe the optimization methods you applied and include the block diagram of your design in the report. You can modify the clock period in the .tcl

file and the pattern file as needed. Verify the functionality of your design through gate-level simulation using the test patterns provided by the TA.

- Score:

  Area efficiency > 760 GOPS/mm2 [get 40 point]

  Area efficiency > 700 GOPS/mm2 [get 30 point]

  Area efficiency > 650 GOPS/mm2 [get 20 point]

  Area efficiency > 600 GOPS/mm2 [get 10 point]

Ensure that your design passes all test patterns.

(1) 流程圖

與 1.2 的架構相同

(2) 01_RTL

```
PASS PATTERN NO. 994, execution cycle :  208,
PASS PATTERN NO. 995, execution cycle :  208,
PASS PATTERN NO. 996, execution cycle :  208,
PASS PATTERN NO. 997, execution cycle :  208,
PASS PATTERN NO. 998, execution cycle :  208,
PASS PATTERN NO. 999, execution cycle :  208,
****************************************************************************
*                          Congratulations!                                *
*  Your execution cycles =             416000   cycles                     *
*  Your clock period     =                0.675 ns                         *
*  Total Latency         =            280800.00 ns                         *
****************************************************************************
Simulation complete via $finish(1) at time 146024112 PS + 0
./PATTERN.v:348   $finish;
ncsim> exit
9:17 ea25dic073@ee25[~/hw3/00_TESTBED]$
```

(3) 02_SYN

```
  data arrival time                                                  655.20

  clock clk (rise edge)                                   675.00     675.00
  clock network delay (ideal)                               0.00     675.00
  avg_q86_reg_19_/CLK (ASYNC_DFFHx1_ASAP7_75t_R)            0.00     675.00 r
  library setup time                                      -19.43     655.57
  data required time                                                 655.57
  ---------------------------------------------------------------------------
  data required time                                                 655.57
  data arrival time                                                 -655.20
  ---------------------------------------------------------------------------
  slack (MET)                                                          0.37


1
exit

Thank you...
9:20 ea25dic073@ee25[~/hw3/02_SYN]$
```

```
Number of ports:                          1023
Number of nets:                          14687
Number of cells:                         13598
Number of combinational cells:           11991
Number of sequential cells:               1586
Number of macros/black boxes:                0
Number of buf/inv:                        2068
Number of references:                       67

Combinational area:               13279.930629
Buf/Inv area:                      1579.772177
Noncombinational area:             9593.173375
Macro/Black Box area:                 0.000000
Net Interconnect area:      undefined  (No wire load specified)

Total cell area:                  22873.104005
Total area:                 undefined
1
```

Period (ps)	Latency (cycles)	Area (um^2)	Throughput (GOPS)	Area efficiency (GOPS/mm^2)
675 (1.481GHz)	208	22873	18.71	818.34

(4) 03_GATE

```
PASS PATTERN NO. 992, execution cycle :  208,
PASS PATTERN NO. 993, execution cycle :  208,
PASS PATTERN NO. 994, execution cycle :  208,
PASS PATTERN NO. 995, execution cycle :  208,
PASS PATTERN NO. 996, execution cycle :  208,
PASS PATTERN NO. 997, execution cycle :  208,
PASS PATTERN NO. 998, execution cycle :  208,
PASS PATTERN NO. 999, execution cycle :  208,
**************************************************************************
*                          Congratulations!                              *
*  Your execution cycles =              416000   cycles                 *
*  Your clock period     =                0.675 ns                      *
*  Total Latency         =           280800.00 ns                       *
**************************************************************************
Simulation complete via $finish(1) at time 146024112 PS + 0
../00_TESTBED/PATTERN.v:348   $finish;
ncsim> exit
9:22 ea25dic073@ee25[~/hw3/03_GATE]$
```

(5) Waveform

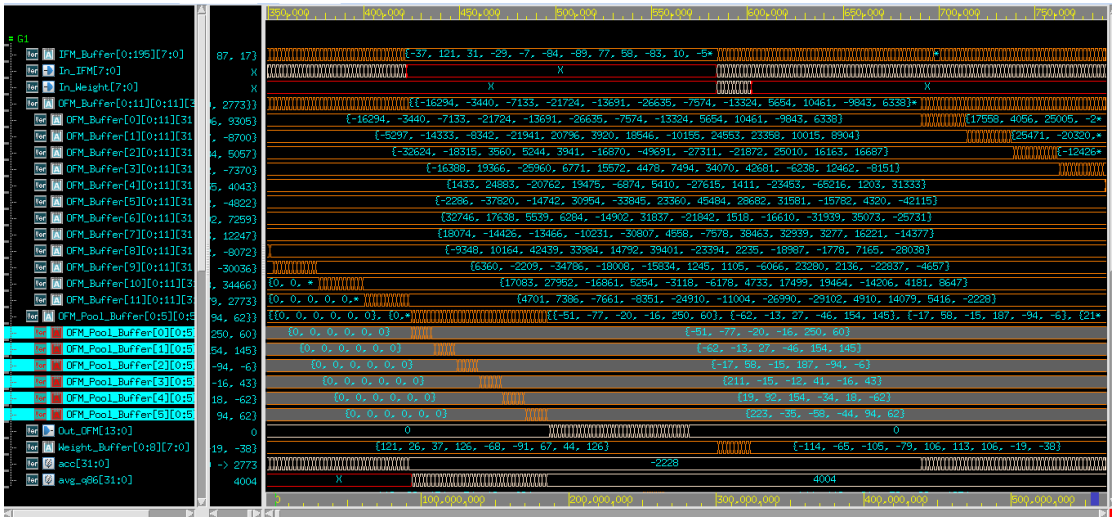

(6)Without Pipeline v.s. With Pipeline (Optimized)

差異	Without Pipeline	With Pipeline (Optimized)
Finite State Machine(FSM)	有明確 state_cs/state_ns FSM 控制四個階段（IDLE → CONV → POOL → OUTPUT）	完全移除 FSM，改用 input_cnt 驅動
IFM Buffer	使用 14x14 array 存整張 IFM	使用 31-depth shift register
Weight Buffer	9 個 element	9 個 element
Convolution	全部在單一 always block 中，9 次乘法+9 次加法在一個 clk 完成	使用 3-stage pipeline
Average Pooling	2x2 average → truncate → leaky ReLU→ 寫入 OFM_Pool_Buffer	每次輸入累加並記錄 counter，累積 4 筆後觸發後段 pipeline
Output	State = Output 時，用	input_cnt 數到 172 至

	out_row_cnt/out_col_cnt 控制 output 順序	208 時輸出結果

(7) Optimizing method

a. Shift-register sliding window

把原本要存整張 14×14 的 Input Feature Map，改成用 31 個暫存格的 sliding windows。每次新進一筆資料，就往右推一格，固定位置就能拿到 3×3 的視窗。這樣可以大幅減少需要的記憶體空間，節省面積，也讓資料存取更快。

b. Parallel hardware multipliers

用 9 個乘法器同時計算 3×3 的乘法，而不是一個一個慢慢做。這樣能同時完成多個運算，大幅提升速度，也能利用硬體的 DSP 單元來降低延遲。

c. Multi-stage addition pipeline

把原本一口氣加完所有乘積的方式，改成分好幾段加法的 pipeline。先做局部加總，再一層一層往上加，最後得到結果。這樣可以縮短每段運算的延遲時間，讓整體時脈可以跑得更快。

d. Streaming / Data-driven design

整體控制流程改成由資料自己驅動，不再靠複雜的狀態機。透過計數器和 valid 訊號控制資料何時進出。這樣能使資料連續流動。

e. On-the-fly pooling

Pooling 不再等整張 Convolution 結果出來才處理，而是邊算邊累加。當收到對應的 4 筆資料時，立即算平均並輸出。這樣可以省掉大量暫存空間，速度也更快。

f. Bit-width reduction

中間運算的位元數只保留必要的大小，例如 19-bit 或 24-bit，不再全部用高精度。這樣可以減少暫存器和布線，節省面積與功耗，同時不影響結果精度。

g. Gating / wait_flag 機制

在輸入行尾或邊界時，會暫停一次運算，避免抓到不完整的視窗。透過 wait_flag 控制暫停與恢復，能確保計算正確且邏輯較簡單，不需要額外做 padding。