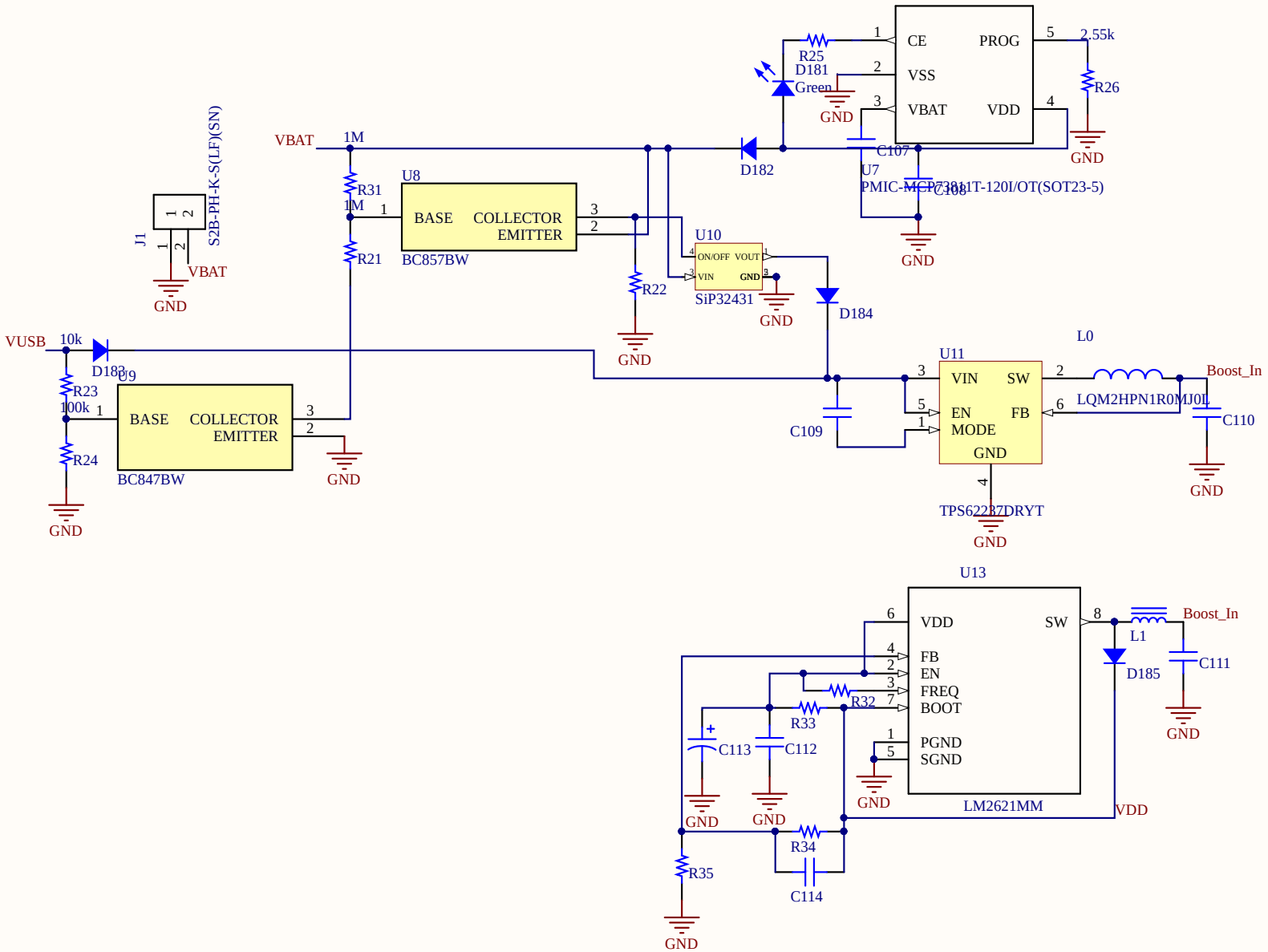

Title		
Size A	Number	Revision
Date: 7/9/2019		Sheet of
File: C:\Users\..\Bat_USB_Switch.SchDoc		Drawn By: