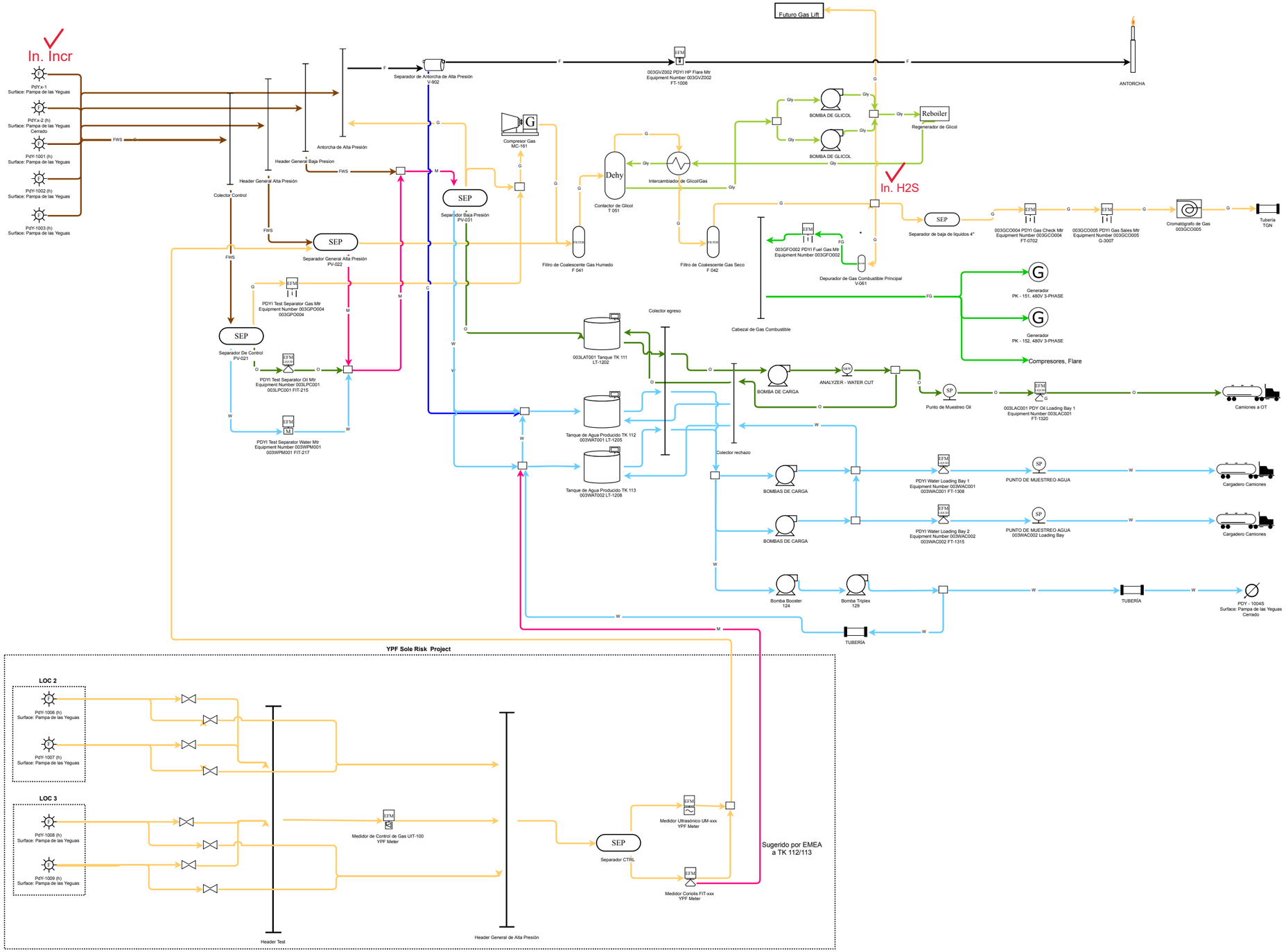

LEGEND

- WH - GAS - FLOWING
- WH - INJECTION - SUSPENDED
- CENTRIFUGAL PUMP
- RECIP COMP - GAS
- ANALYZER - WATER CUT
- GAS CHROMATOGRAPH
- MTR - CORIOLIS, EFM
- MTR - LIQUID CORIOLIS, EFM
- MTR - MAG, EFM
- MTR - ORIFICE, EFM
- MTR - THERMALMASS, EFM
- MTR - ULTRASONIC, EFM
- MTR - V-CONE, EFM
- SP
- KNOCK OUT
- TANK W SCADA GAUGE
- DEHYDRATOR
- FILTER PACKAGE
- HEAT EXCHANGER
- REBOILER
- SCRUBBER
- SEP - HORIZONTAL
- HEADER
- PIPELINE SEGMENT
- VALVE
- FLARE STACK
- TRUCK
- GENERATOR

PRODUCTS

C: CONDENSATE
F: FLAME
FG: FUEL GAS
FWS: FULL WELL STREAM
G: GAS
Gly: GLYCOL

FACILITIES

EXXONMOBIL EXPLORATION ARGENTINA S.R.L

PAMPA DE LAS YEGUAS I
VACA MUERTA

Work In Progress
Last Verified: Jan 3, 2022 by Fabio Adrian Valencia
Production Month: Jan 2022

ExxonMobil

PREPARED ON
muddyboots.online