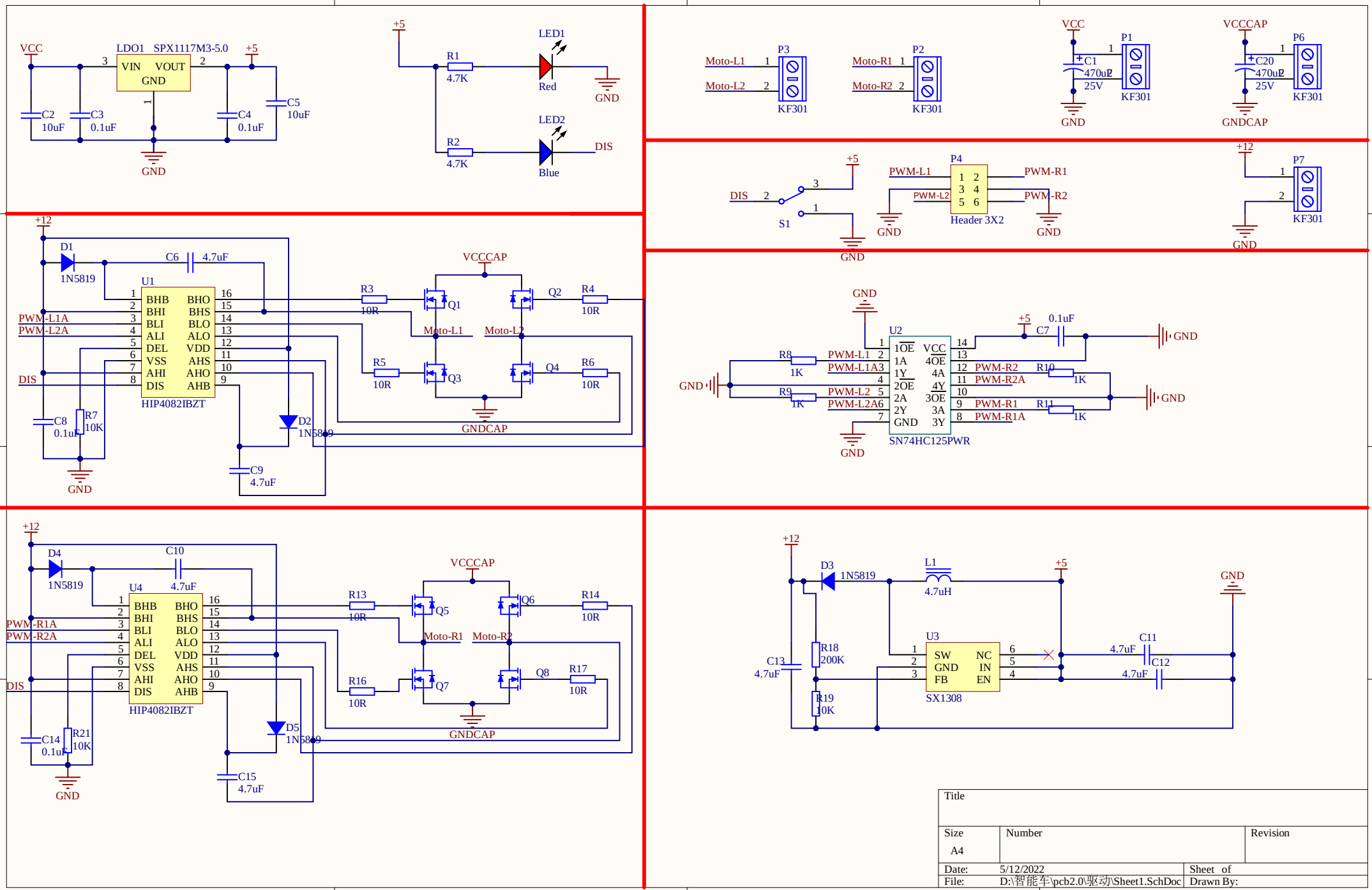

Title		
Size A4	Number	Revision
Date: 5/12/2022	Sheet of	
File: D:\智能车\pcb2.0\驱动\Sheet1.SchDoc	Drawn By:	