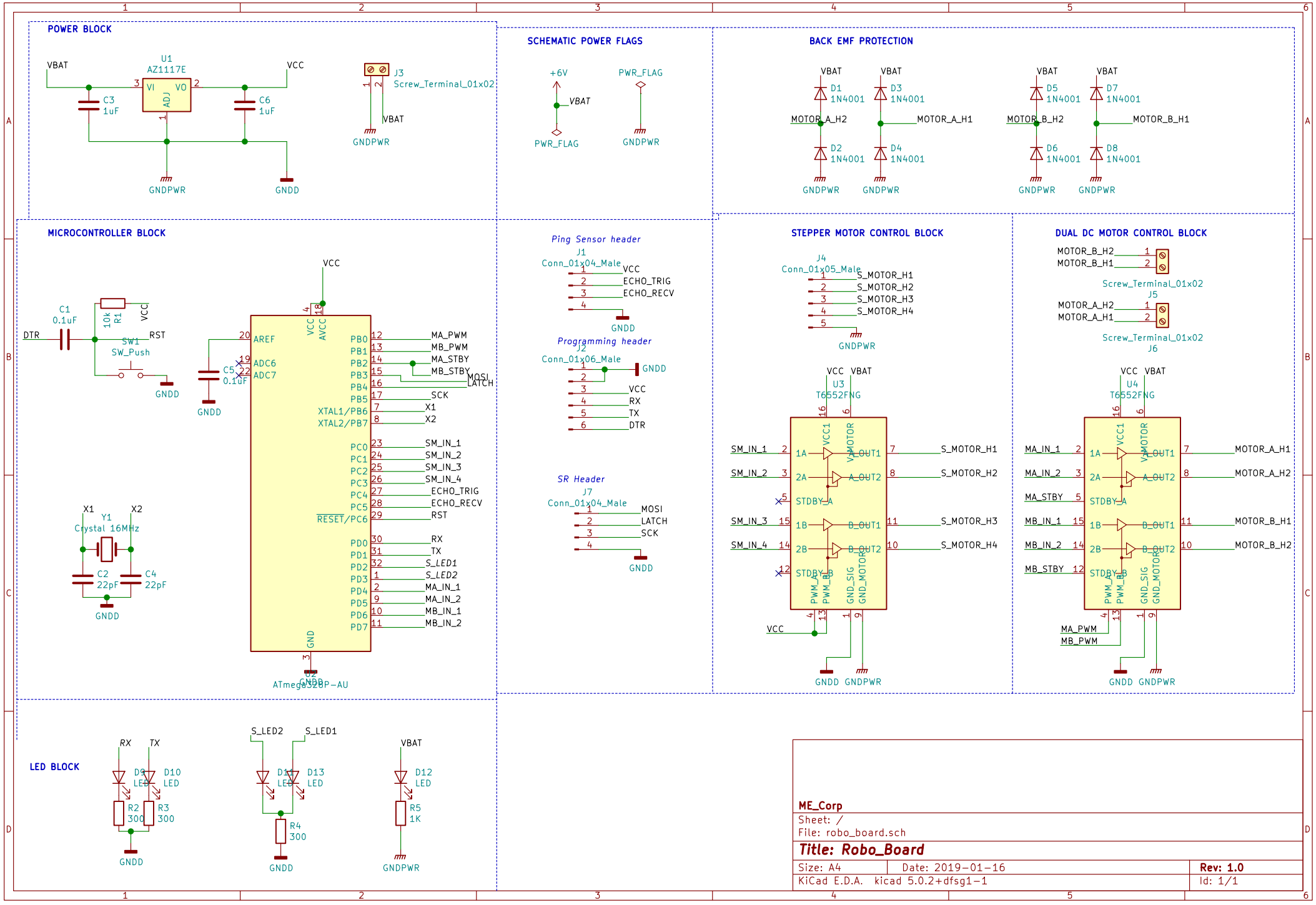
POWER BLOCK
U1
AZ1117E
VBAT
VCC
VI
VO
ADJ
C3
1uF
C6
1uF
GNDPWR
GNDD
J3
Screw_Terminal_01x02
SCHEMATIC POWER FLAGS
+6V
PWR_FLAG
BACK EMF PROTECTION
D1
1N4001
D2
1N4001
D3
1N4001
D4
1N4001
D5
1N4001
D6
1N4001
D7
1N4001
D8
1N4001
MOTOR_A_H2
MOTOR_A_H1
MOTOR_B_H2
MOTOR_B_H1
MICROCONTROLLER BLOCK
C1
0.1uF
10k
R1
DTR
RST
SW1
SW_Push
C5
0.1uF
AREF
ADC6
ADC7
AVCC
PB0
PB1
PB2
PB3
PB4
PB5
XTAL1/PB6
XTAL2/PB7
PC0
PC1
PC2
PC3
PC4
PC5
RESET/PC6
PD0
PD1
PD2
PD3
PD4
PD5
PD6
PD7
MA_PWM
MB_PWM
MA_STBY
MB_STBY
MOSI
LATCH
SCK
X1
X2
SM_IN_1
SM_IN_2
SM_IN_3
SM_IN_4
ECHO_TRIG
ECHO_RECV
RST
RX
TX
S_LED1
S_LED2
MA_IN_1
MA_IN_2
MB_IN_1
MB_IN_2
GND
U2
ATmega328P-AU
Y1
Crystal 16MHz
C2
22pF
C4
22pF
Ping Sensor header
J1
Conn_01x04_Male
Programming header
J2
Conn_01x06_Male
SR Header
J7
Conn_01x04_Male
STEPPER MOTOR CONTROL BLOCK
J4
Conn_01x05_Male
S_MOTOR_H1
S_MOTOR_H2
S_MOTOR_H3
S_MOTOR_H4
U3
T6552FNG
VCC1
VMOTOR
1A
2A
1B
2B
A_OUT1
A_OUT2
B_OUT1
B_OUT2
STDBY_A
STDBY_B
PWM_A
PWM_B
GND_SIG
GND_MOTOR
DUAL DC MOTOR CONTROL BLOCK
J5
Screw_Terminal_01x02
J6
Screw_Terminal_01x02
U4
T6552FNG
LED BLOCK
D9
LED
D10
LED
D11
LED
D13
LED
D12
LED
R2
300
R3
300
R4
300
R5
1K
ME_Corp
Sheet: /
File: robo_board.sch
Title: Robo_Board
Size: A4
Date: 2019-01-16
Rev: 1.0
KiCad E.D.A. kicad 5.0.2+dfsg1-1
Id: 1/1