Transformers Are Optimal Effective Fields

Changqing Fu
PSL University
changqingfu@changqingfu.com

Abstract

Are representations in Transformers provably optimal? We present an axiomatic theory of the Transformer architecture. First, we show that a complex-valued Transformer with linear attention and linear feed-forward residual blocks is uniquely determined by a potential field governed by leading linear and interactive terms. Then, we characterize a Softmax Transformer via a canonical axiomatic construction. The practical implications include a non-exhaustive unification of existing Transformer variants within a single formalism, and a principled foundation for future architecture search.

1 Introduction

Deriving the pivotal Transformer architecture and its many variants [Vaswani et al., 2017, Dehghani et al., 2019, Narang et al., 2021] in a constructive and systematic way naturally motivates the study of its variational form. From CNNs to Transformers, the interactions within the graph of tokens shift from local and deterministic to long-range and dynamic. Applying symmetries to CNNs has inspired geometric deep learning [Bronstein et al., 2021]. Likewise, it is necessary to relax geometric constraints on more principled domains whenever they are too restrictive, leaving enough flexibility for the model to learn. This echoes the principle that *good models are those with the least geometric structures.* In the language of physics: *asymmetrical effects must have asymmetrical causes* [Curie, 1894]. In machine learning, this idea aligns with *the bitter lesson* [Sutton, 2019], which states that models tend to become less hand-designed over time. Another motivation arises from the continual increase in computing power (Moore's Law), which makes it feasible to implement generalist models that do not overfit across a wide variety of test data. Growing computational capacity, and its associated power consumption, encourages algorithm designers to allocate computation within a model as efficiently as possible. Developing a foundational theory of Transformers thus remains an open question of great theoretical and practical value.

Contribution We define the notion of *Structural Optimality* in Definition 3 and prove that the self-attention is a natural and minimal interactive term in the effective field immediately after MLP. We then use the theory to predict the necessity of ReLU, Conic, and Gated activation, Softmax Attention, and Sparse Attention. The logical chain is:

Universal Field $\rightarrow$ Effective Truncation $\rightarrow$ Variational Calculus $\rightarrow$ Optimal Architecture.

2 Background

Notation Let $[n] = \{0, 1, \ldots, n-1\}$ be the set of n indices. The discrete state is written as $x(t, \omega, \sigma) \in \mathbb{F}$, where $t \in \mathcal{T} := [T]$ is the discrete layer index, $\omega \in \Omega := [N]$ indexes tokens (words/pixels), and $\sigma \in \Sigma := [C]$ indexes neurons or vector field components. $\mathbb{F}$ is a number field either real $\mathbb{R}$ or complex $\mathbb{C}$. The symbols T, N, and C denote the depth, the sequence length (number of tokens), and the feature space dimension (network width), respectively. In a continuous-layer

EurIPS 2025 Workshop on Principles of Generative Modeling (PriGM).

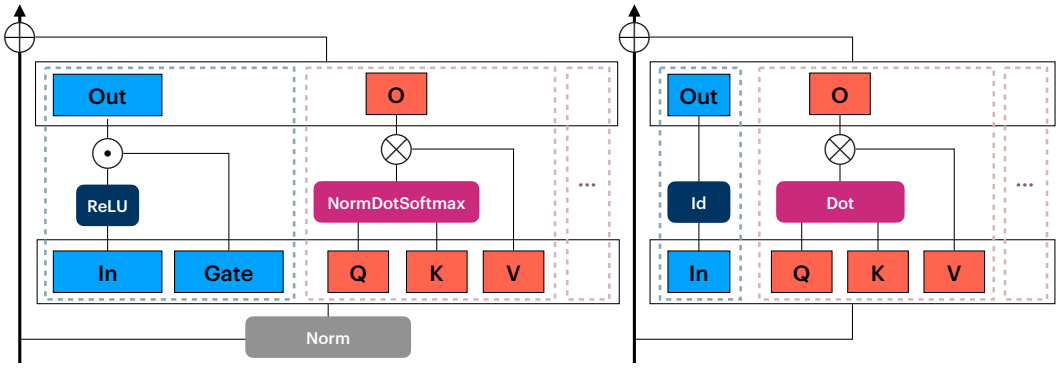

Figure 1: **Left:** a practical parallelized Transformer block with GLU activation. The wide MLP can be equivalently separated into multiple narrow heads. **Right:** a simplified Transformer block eliminating activation functions, normalizations and softmax.

setting we inherit the notation $\mathcal{T} := [0, 1]$, and write $\dot{x} := \frac{\mathrm{d}x}{\mathrm{d}t}$ for the layer-wise derivative and omit the layer as an implicit variable. For brevity, we assume Σ, Ω are finite and denote the discrete state as a layer-dependent matrix $\boldsymbol{X} \in \mathbb{F}^{N \times C}$ whose row and column entries are $\boldsymbol{X}_{\omega\sigma} := x(\omega, \sigma)$, and denote each token at $\omega \in \Omega$ as a vector $x_\omega \in \mathbb{F}^C$ in the feature space whose components are $(x_\omega)_\sigma := x(\omega, \sigma)$. The parameters are the layer-dependent matrices $\boldsymbol{W} = \boldsymbol{W}(t) \in \mathbb{F}^{C \times C}$. We use $\odot$ for element-wise (Hadamard) operations. The Lie bracket $[f, g] := fg - gf$ denotes the commutator. $\boldsymbol{W}^\top$ and $\boldsymbol{W}^*$ are the real and conjugate / Hermitian transposes of $\boldsymbol{W}$ respectively. $\|\cdot\|_{\mathrm{F}}$ denotes the Frobenius norm. $U(C)$ is the C-dimensional unitary group, S_N is the N-dimensional permutation group, and $C_{U(C)}(\boldsymbol{W}) := \{\boldsymbol{V} \in U(C) : [\boldsymbol{V}, \boldsymbol{W}] = 0\}$ is the centralizer of $\boldsymbol{W}$ within $U(C)$.

2.1 Transformer as ODE

Figure 1 (left) visualizes the architecture of a parallelized Transformer [Dehghani et al., 2023] as a two-layer ResNet with mixed nonlinearities. Suppose the parameters of the i-th attention head are $\boldsymbol{Q}_i, \boldsymbol{K}_i, \boldsymbol{V}_i, \boldsymbol{O}_i \in \mathbb{F}^{C \times C_{\mathrm{A}}}$, the parameters of the MLP are $\boldsymbol{W}_{\text{gate}}, \boldsymbol{W}_{\text{in}}, \boldsymbol{W}_{\text{out}} \in \mathbb{F}^{C \times C_{\text{MLP}}}$, and the number field is real $\mathbb{F} = \mathbb{R}$, we define the model with normalization omitted:

Definition 1 (Transformers)**.** The ODE form of a Transformer is defined as

$$\dot{\boldsymbol{X}} = ((\boldsymbol{X}\boldsymbol{W}_{\text{gate}}) \odot \mathrm{ReLU}(\boldsymbol{X}\boldsymbol{W}_{\text{in}}))\boldsymbol{W}_{\text{out}} + \sum_{i=1}^{n} \mathrm{Softmax}(C_{\mathrm{A}}^{-1/2}\boldsymbol{X}\boldsymbol{Q}_i\boldsymbol{K}_i^\top\boldsymbol{X}^\top)\boldsymbol{X}\boldsymbol{V}_i\boldsymbol{O}_i^\top. \quad (1)$$

It can be more concisely written as $\dot{\boldsymbol{X}} = \lambda(\boldsymbol{X}\boldsymbol{W}_{\text{all}})\boldsymbol{W}'_{\text{all}}$ where $\lambda := \lambda_{\text{MLP}} \oplus \lambda_{\mathrm{A}}$, or in expanded form, $\dot{\boldsymbol{X}} = \lambda_{\text{MLP}}(\boldsymbol{X}\boldsymbol{W}_{\text{MLP}})\boldsymbol{W}'_{\text{MLP}} + \lambda_{\mathrm{A}}(\boldsymbol{X}\boldsymbol{W}_{\mathrm{A}})\boldsymbol{W}'_{\mathrm{A}}$, where $\boldsymbol{W}_{\text{all}} := [\boldsymbol{W}_{\text{MLP}} \mid \boldsymbol{W}_{\mathrm{A}}] = [\boldsymbol{W}_{\text{gate}} \mid \boldsymbol{W}_{\text{in}} \mid \boldsymbol{Q}_1 \mid \boldsymbol{K}_1 \mid \boldsymbol{V}_1 \mid \ldots \mid \boldsymbol{Q}_n \mid \boldsymbol{K}_n \mid \boldsymbol{V}_n]$ and $\boldsymbol{W}'_{\text{all}} := [\boldsymbol{W}'_{\text{MLP}} \mid \boldsymbol{W}'_{\mathrm{A}}] = [\boldsymbol{W}_{\text{out}} \mid \boldsymbol{O}_1 \mid \ldots \mid \boldsymbol{O}_n]$.

The more common Transformer architecture is a discrete-layer operator-splitting scheme of this ODE. The split scheme is approximately equal to the parallelized scheme when the nonlinearities commute. Otherwise they are approximately equal when the model is deep.

2.2 Comparison between Parallelized and Split Transformers

The discrete layer is a forward (Euler) step $\boldsymbol{X}(t+1) = \boldsymbol{X}(t) + \lambda(\boldsymbol{X}(t)\boldsymbol{W}(t))\boldsymbol{W}'(t)$ and the following approximation links between parallelized and common Transformers.

$$(1 + h\lambda_{\text{MLP}} + h\lambda_{\mathrm{A}}) \approx e^{h\lambda_{\text{MLP}} + h\lambda_{\mathrm{A}}} \approx e^{h\lambda_{\text{MLP}}}e^{h\lambda_{\mathrm{A}}} \approx (1 + h\lambda_{\text{MLP}})(1 + h\lambda_{\mathrm{A}}) \quad (2)$$

In equation 2, the left/right hand side is a layer of the parallelized/split Transformer respectively. The first and last approximations become equal as $h \to 0$ whereas the second equality holds if and only if λ_{MLP} and λ_{A} commute ($[\lambda_{\text{MLP}}, \lambda_{\mathrm{A}}] = 0$). In the general case when the ODE generators don't commute, deeper models are beneficial in mixing the nonlinear terms, summarized as Lemma 2, as a consequence of Lemma 1.

Lemma 1 (Lie-Trotter)**.** *The equality holds:* $e^{\lambda_{MLP}+\lambda_A} = \lim_{T\to\infty}(e^{\frac{\lambda_{MLP}}{T}} e^{\frac{\lambda_A}{T}})^T$.

Proof. Applying the Baker-Campbell-Hausdorff expansion [Varadarajan, 2013] $e^{\lambda_{\rm MLP}t}e^{\lambda_{\rm A}t} = e^{(\lambda_{\rm MLP}+\lambda_{\rm A})t+\frac{1}{2}[\lambda_{\rm MLP},\lambda_{\rm A}]t^2+O(t^3)}$ gives the leading non-commutative correction. □

Lemma 2 (The Benefit of Depth)**.** *Suppose* $\lambda_{MLP}^{\boldsymbol{W}(t)}(\boldsymbol{X}) := \lambda_{MLP}(\boldsymbol{X}\boldsymbol{W}(t))\boldsymbol{W}'(t)$ *and* $\lambda_{A}^{\boldsymbol{W}(t)}(\boldsymbol{X}) := \lambda_{A}(\boldsymbol{X}\boldsymbol{W}(t))\boldsymbol{W}'(t)$*, then the parallel and the split schemes asymptotically coincide:*

$$\lim_{T\to\infty}\prod_{t=0}^{T-1}(1+\lambda_{MLP}^{\boldsymbol{W}(t/T)})(1+\lambda_{A}^{\boldsymbol{W}(t/T)}) = \lim_{T\to\infty}\prod_{t=0}^{T-1}(1+\lambda_{MLP}^{\boldsymbol{W}(t/T)}+\lambda_{A}^{\boldsymbol{W}(t/T)}).$$

The non-commutative correction can be used to formulate sparse attention in Section 4.

2.3 Variational Formulation

To formulate the optimality of the ODE, we recall its potential/action/variational/path-integral form.

Definition 2 (Potential/Action)**.** The (potential) field, whenever it exists, of an ODE path $\boldsymbol{X} : [0,1] \to \mathbb{C}^{N\times C}$ is a function $V : \mathbb{C}^{N\times C} \to \mathbb{C}$ such that the ODE coincides with the Euler-Lagrange equation $\dot{\boldsymbol{X}} = \frac{\partial V}{\partial \boldsymbol{X}^*}$ (or equivalently $-\dot{\boldsymbol{X}}^* = \frac{\partial V}{\partial \boldsymbol{X}}$) that extremizes the action of the path defined as

$$S(\boldsymbol{X}) := \int_0^1 \mathrm{Tr}(\frac{1}{2}(\dot{\boldsymbol{X}}\boldsymbol{X}^* - \boldsymbol{X}\dot{\boldsymbol{X}}^*) - V(\boldsymbol{X}))\,\mathrm{d}t. \tag{3}$$

The real and imaginary parts of V are the dissipative and conservative parts respectively. Note that $\alpha := \frac{1}{2}(\,\mathrm{d}\boldsymbol{X}\boldsymbol{X}^* - \boldsymbol{X}\,\mathrm{d}\boldsymbol{X}^*)$ is canonical, since $\mathrm{d}\alpha = \mathrm{d}\boldsymbol{X}\wedge\boldsymbol{X}^*$ is the symplectic form, and if we set $\boldsymbol{X} = \frac{q+ip}{\sqrt{2}}$, then $\max_{\dot{q}} \frac{1}{2}(\dot{\boldsymbol{X}}\boldsymbol{X}^* - \boldsymbol{X}\dot{\boldsymbol{X}}^*) - V(\dot{q}) = p\dot{q} - V(\dot{q})$ recovers the Legendre transform.

Definition 3 (Structural Optimality)**.** An architecture $\boldsymbol{X}$ whose input and output are $\boldsymbol{X}(0)$ and $\boldsymbol{X}(1)$ is said to be *structurally optimal* with respect to a field V if it extremizes the action of the path $\boldsymbol{X}(t)$.

3 Optimality of Transformers

We first study a complex ODE whose potential exists, visualized in Figure 1 (right) before discussing engineering-meaningful cases to simplify the theory.

3.1 Linearized Transformers

Consider the complex-valued case $\mathbb{F} = \mathbb{C}$, and use the Hermitian transpose instead of the transpose. Then consider a simplified Transformer without nonlinear functions (activation functions, normalization, softmax, etc.) and without gating layers.

Definition 4 (Linearized Transformers)**.** A linearized Transformer ODE is defined as the equation

$$\dot{\boldsymbol{X}} = \boldsymbol{X}\boldsymbol{W}_{\rm in}\boldsymbol{W}_{\rm out}^* + \sum_{i=1}^{n} C_{\rm A}^{-1/2}\boldsymbol{X}\boldsymbol{Q}_i\boldsymbol{K}_i^*\boldsymbol{X}^*\boldsymbol{X}\boldsymbol{V}_i\boldsymbol{O}_i^*. \tag{4}$$

From this definition, we can convert the ODE into a potential field form by the following lemma.

Lemma 3 (Linearized Transformers As Fields)**.** *Suppose* n *is even, and then there exists parameters* $\boldsymbol{W}_{in}, \boldsymbol{W}_{out}, \boldsymbol{Q}_i, \boldsymbol{K}_i, \boldsymbol{V}_i$ *such that equation 4 is associated with the field*

$$V(\boldsymbol{X}) = \mathrm{Tr}(\boldsymbol{X}\boldsymbol{W}_{MLP}\boldsymbol{X}^*) + \frac{1}{\sqrt{C_A}}\sum_{i=1}^{n/2}\mathrm{Tr}(\boldsymbol{X}\boldsymbol{W}_{Ai}\boldsymbol{X}^*\boldsymbol{X}\boldsymbol{W}_{Bi}^*\boldsymbol{X}^*).$$

Proof. $\partial V/\partial \boldsymbol{X}^* = \boldsymbol{X}\boldsymbol{W}_{\rm MLP} + \frac{1}{\sqrt{C_{\rm A}}}(\sum_{i=1}^{n/2}\boldsymbol{X}\boldsymbol{W}_{{\rm A}i}\boldsymbol{X}^*\boldsymbol{X}\boldsymbol{W}_{{\rm B}i}^*\boldsymbol{X}^* + \boldsymbol{X}\boldsymbol{W}_{{\rm B}i}^*\boldsymbol{X}^*\boldsymbol{X}\boldsymbol{W}_{{\rm A}i}^*\boldsymbol{X}^*)$. Then take $\boldsymbol{W}_{\rm MLP} = \boldsymbol{W}_{\rm in}\boldsymbol{W}_{\rm out}^*$, $\boldsymbol{W}_{{\rm A}i} = \boldsymbol{Q}_i\boldsymbol{K}_i^*$, $\boldsymbol{W}_{{\rm B}i} = \boldsymbol{V}_i\boldsymbol{O}_i^*$. □

Note that $\boldsymbol{Q}_i\boldsymbol{K}_i^* = \boldsymbol{V}_{i+n/2}\boldsymbol{O}_{i+n/2}^*$ and $\boldsymbol{Q}_{i+n/2}\boldsymbol{K}_{i+n/2}^* = \boldsymbol{V}_i\boldsymbol{O}_i^*$, otherwise the potential is not guaranteed to exist; we leave the general case for future work. Likewise, we may also recover the softmax function out of the free energy potential in Section 4.

3.2 Optimality of Matrix Potentials

To formalize in what sense the potentials are optimal, we assume necessary axioms on the universal class of a matrix-variate potential V:

Axiom 1 (Analyticity)**.** $V(\boldsymbol{X})$ is analytic in $(\mathrm{Re}\boldsymbol{X}, \mathrm{Im}\boldsymbol{X})$.

Axiom 2 (Space Homogeneity)**.** At each t, $\forall \boldsymbol{P} \in U(N)$, there holds $V(\boldsymbol{PX}) = V(\boldsymbol{X})$.

Axiom 3 (Feature Symmetries)**.** At each t, $\exists \boldsymbol{U}_1 \dots \boldsymbol{U}_n \in \mathbb{C}^{C\times C}$ such that $\forall \boldsymbol{R} \in \bigcap_{i=1}^n C_{U(C)}(\boldsymbol{U}_i)$, there holds $V(\boldsymbol{XR}^*) = V(\boldsymbol{X})$.

Axiom 4 (Optional, Low-Rankness)**.** $C_{\mathrm{A}} := \max_{1\le i\le n} \mathrm{Rank}(\boldsymbol{W}_i) \ll C$.

Intuitions Axiom 1 guarantees a smooth model which separates into multiple scales. Axiom 2 implies exchangeability among N words, since $S_N \subset U(N)$. Axiom 3 ensures symmetries among a set of C_{A} learnable $U(1)$ symmetries, represented by the centralizer of parameter matrices $\boldsymbol{W}$. Note the gated MLP does not satisfy Axiom 3. Axiom 4 is optional but practical: from the symmetry-breaking principle [Curie, 1894], we assume that the number of such $U(1)$ symmetries is small.

Lemma 4 (Canonical Form of Matrix Fields)**.** *Under Axioms 1, 2, and 3, the matrix potential takes the form of* $V(\boldsymbol{X}) = \mathrm{Tr} f(\boldsymbol{XW}_1\boldsymbol{X}^*, \dots, \boldsymbol{XW}_n\boldsymbol{X}^*)$ *for some analytic spectral function* $f : \mathbb{C}^n \to \mathbb{C}$ *and some parameter matrices* $\boldsymbol{W}_1, \dots, \boldsymbol{W}_n \in \mathbb{C}^{C\times C}$.

Proof. First we check that the axioms hold for the form of V: for all $\boldsymbol{P}, \boldsymbol{R}$ in the condition, by definitions of unitary group and centralizers, we have $V(\boldsymbol{PXR}^*) = \mathrm{Tr} f(\{\boldsymbol{PXR}^*\boldsymbol{W}_i\boldsymbol{RX}^*\boldsymbol{P}^*\}_{i=1}^n) = \mathrm{Tr} f(\{\boldsymbol{XW}_i\boldsymbol{X}^*\}_{i=1}^n) = V(\boldsymbol{X})$. Next we show the uniqueness of the form of V. By Axiom 1, the matrix potential can be written as an infinite polynomial series $V : \mathbb{C}^{N\times C} \to \mathbb{C}$. By Axiom 2, the potential $V(\boldsymbol{X}) = V(\boldsymbol{X}^*\boldsymbol{X}) : \mathbb{C}^{C\times C} \to \mathbb{C}$. By adding Axiom 3, the potential $V(\boldsymbol{X}) = \mathrm{Tr} f(\boldsymbol{XW}_1\boldsymbol{X}^*, \boldsymbol{XW}_2\boldsymbol{X}^*, \dots, \boldsymbol{XW}_n\boldsymbol{X}^*)$ for $f : \mathbb{C}^n \to \mathbb{C}$. (details in Appendix A.) □

Theorem 5 (Optimality of Linearized Transformers)**.** *Under Axioms 1, 2, 3, Definition 4 is the minimal nontrivial interaction ODE.*

Proof. By Lemma 4, the leading terms of the analytic expansion of V are written as $V(\boldsymbol{X}) = \mathrm{Tr}(c_0\boldsymbol{I} + \sum_{i=1}^n c_{1,i}\boldsymbol{XW}_{1,i}\boldsymbol{X}^* + \sum_{i=1}^n c_{2,i}\boldsymbol{XW}_{2,i}\boldsymbol{X}^*\boldsymbol{XW}_{3,i}\boldsymbol{X}^* + O(\|\boldsymbol{X}\|^6))$ where $c_0, c_{1,i}, c_{2,i}$ are coefficients of f, $\boldsymbol{W}_{\mathrm{in},i}, \boldsymbol{W}_{\mathrm{out},i}, \boldsymbol{Q}_i, \boldsymbol{K}_i, \boldsymbol{V}_i, \boldsymbol{O}_i \in \mathbb{C}^{C\times C_{\mathrm{A}}}$ and $C_{\mathrm{MLP}} = nC_{\mathrm{A}}$. Minimality implies the remainders vanish $O(\|\boldsymbol{X}\|^6)) = 0$. The MLP term can be fused into $\sum_{i=1}^n \boldsymbol{XW}_{\mathrm{in},i}\boldsymbol{W}_{\mathrm{out},i}^*\boldsymbol{X}^* =: \boldsymbol{XW}_{\mathrm{in}}\boldsymbol{W}_{\mathrm{out}}\boldsymbol{X}^*$ where $\boldsymbol{W}_{\mathrm{in}}, \boldsymbol{W}_{\mathrm{out}} \in \mathbb{C}^{C\times(nC_{\mathrm{A}})}$. We conclude by applying Lemma 3. □

The implication of Theorem 5 is that the linearized Transformer in equation 4 is a minimal model, i.e. it is the *effective* interactive field. Softmax attention equation 1 from the free energy potential and many variants (powers, sigmoid, etc.) also satisfies the canonical form in Lemma 4. Finally, we comment that the width of the MLP and attention matrices are a result of the low-rank assumption.

Lemma 6 (Low-Rankness)**.** *Under Axiom 4, if n is sufficiently large, then $C_A \ll C < C_{MLP}$.*

Proof. $C_{\mathrm{A}} \ll C$ comes directly from Axiom 4. Fix C_{A}, $C < nC_{\mathrm{A}} = C_{\mathrm{MLP}}$ when n is large. □

4 Engineering Implications

In this section, we exemplify the usefulness of the theoretical framework when it extends to engineering-meaningful architectures by adapting to different symmetries.

Activation-MLP as Projected Gradient The ReLU MLP $\lambda^{\boldsymbol{W}(t)}(\boldsymbol{X}) = \sum_{i=1}^n (\boldsymbol{XW}_{\mathrm{in}})_+\boldsymbol{W}_{\mathrm{out}}^*$ is a projection towards the positive cone (orthant) $\mathbb{R}_+^{C_{\mathrm{A}}}$. In the space of the ODE path $\boldsymbol{X}$, the cone is affinely transformed to $\boldsymbol{W}_{\mathrm{in}}\mathbb{R}_+^{C_{\mathrm{A}}}\boldsymbol{W}_{\mathrm{out}}^*$, whose direction and section are learnable. In the convex optimization language, $\mathrm{ReLU}(\boldsymbol{X}) = \Pi_{\mathbb{R}_+}(\boldsymbol{X}) := \min_{\boldsymbol{Y}\in\mathbb{R}_+} \|\boldsymbol{X} - \boldsymbol{Y}\|_{\mathrm{F}}^2$ is the projection operator and $\Pi_{\boldsymbol{W}_{\mathrm{MLP}}}(\boldsymbol{X}) := (\boldsymbol{XW}_{\mathrm{in}})_+\boldsymbol{W}_{\mathrm{out}}^*$ is the affine projection onto the affine orthant parameterized by $\boldsymbol{W}_{\mathrm{in}}$ and $\boldsymbol{W}_{\mathrm{out}}$.

As one of the predictions of our theory, previous work [Fu and Cohen, 2024] showed that ReLU is geometrically characterized by three axioms: **idempotence** ($\lambda \circ \lambda = \lambda$), **positive homogeneity** ($\lambda \circ h = h \circ \lambda, \forall h > 0$), and **permutation equivariance** ($\pi \circ \lambda = \lambda \circ \pi, \forall \pi \in S_C$). The third axiom restricts the form of λ to be component-wise. Relaxing the symmetry group S_C to subspace rotation group $S_n \times U(C_{\mathrm{A}})$, where $n = C/C_{\mathrm{A}}$ is the number of cones / heads, improves general-purpose model generalization and learning efficiency including GPTs, ResNets and Diffusion Transformers.

Gated MLP as Permutation-Invariant Field As we explained in the intuition of Axiom 3, the left unitary equivariance is a stronger condition than token exchangeability. Once we relax $U(N)$ to S_N, the form of V is no longer restricted to $V(\boldsymbol{X}^*\boldsymbol{X})$, but a row-wise function is sufficient. The minimal *nonlinear* model in this case is the gated MLP without ReLU $\dot{\boldsymbol{X}} = (\boldsymbol{X}\boldsymbol{W}_{\text{gate}}) \odot (\boldsymbol{X}\boldsymbol{W}_{\text{in}})\boldsymbol{W}_{\text{out}}^\top$ recovered from the triple-trace potential $V(\boldsymbol{X}) = \frac{1}{3}\sum_{jk}((\boldsymbol{X}\boldsymbol{W}_{\text{gate}}) \odot (\boldsymbol{X}\boldsymbol{W}_{\text{in}}) \odot (\boldsymbol{X}\boldsymbol{W}_{\text{out}}))_{jk}$ and $\dot{\boldsymbol{X}} = \partial V/\partial \boldsymbol{X}$. We may also recover GLU [Shazeer, 2020] by the ReLU projected gradient flow, and the ReLU^2 activation by projecting both inputs and tying the input and gating parameters.

Softmax Attention as Free-Energy Field

Lemma 7 (Softmax Transformers)**.** *Suppose n is even. There exist parameters such that the ODE $\dot{\boldsymbol{X}} = \sum_{i=1}^n \mathrm{Softmax}(C_A^{-1/2}\boldsymbol{X}\boldsymbol{Q}_i\boldsymbol{K}_i^*\boldsymbol{X}^*)\boldsymbol{X}\boldsymbol{V}_i\boldsymbol{O}_i^*$ is associated with the free energy ("log-sum-exp") potential $V(\boldsymbol{X}) = \sqrt{C_A}\sum_{i=1}^n\sum_{j=1}^N \log\sum_{k=1}^N \exp([\frac{1}{\sqrt{C_A}}\boldsymbol{X}\boldsymbol{W}_{Ai}\boldsymbol{X}^*]_{jk})$.*

Proof. $\partial V/\partial \boldsymbol{X}^* = \sum_{i=1}^n \mathrm{Softmax}(C_{\mathrm{A}}^{-1/2}\boldsymbol{X}\boldsymbol{W}_{\mathrm{A}i}\boldsymbol{X}^*)\boldsymbol{X}\boldsymbol{W}_{\mathrm{A}i}$, and take $\boldsymbol{W}_{\mathrm{A}i} = \boldsymbol{Q}_i\boldsymbol{K}_i^* = \boldsymbol{V}_i\boldsymbol{O}_i^*$. □

Note that the potential exists only when $\boldsymbol{Q}_i\boldsymbol{K}_i^* = \boldsymbol{V}_i\boldsymbol{O}_i^* = (\boldsymbol{Q}_{i+n/2}\boldsymbol{K}_{i+n/2}^*)^* = (\boldsymbol{V}_{i+n/2}\boldsymbol{O}_{i+n/2}^*)^*$, and we leave the general case as a future work.

Sparse Attention as Non-Commutative Correction

Lemma 8 (Sparse Attention)**.** *Under the pairwise non-commutative condition $[\lambda_{MLP}, \lambda_A] = \beta\lambda_A$, the sequential composition of the layers is equivalent to a single effective flow generated by:*

$$\exp(\lambda_{MLP})\exp(\lambda_A) = \exp\left(\lambda_{MLP} + G(\beta)\cdot\lambda_A\right)$$

where the effective interaction gate $G(\beta)$ is given by the generating function of the Bernoulli numbers: $G(\beta) = \frac{\beta}{1-e^{-\beta}}$. As $\beta \to -\infty$, $G(\beta) \sim |\beta|e^{-|\beta|} \to 0$.

Positional Encodings Do Not Violate Symmetry Rotary positional encodings [Heo et al., 2024] are Fourier bases $\boldsymbol{X}_{\omega\sigma} = e^{i\omega\sigma/T_{\mathrm{PE}}} \in U(1) \subset \mathbb{C}$ where T_{PE} is a very large period. Tokens with positional encoding dimensions do not violate permutation symmetry among tokens, but since they depend on token index ω, spatial pairwise / outer products reflect relative distances between words.

5 Related Works

Martin and Hinrichs [2025] studied deep models' generalization by layer-wise spectral overlap between a varying $\boldsymbol{W}_{\mathrm{S}}(t)$ and a fixed $\boldsymbol{W}_{\mathrm{T}}(t)$, which naturally compares to our complex Hilbert space product. Barnfield et al. [2025] extended the double-descent curve of test error over aspect ratio from the MLP to the self-attention case. Furuya et al. [2025] proved a depth-dependent universality bound in terms of approximation theory, whereas our work discusses the effective approximation within a "universal" function class. Marcotte et al. [2025] studied the parameter symmetry induced by the activation function and self-attention, which connects to our symmetry axioms.

6 Conclusion and Perspectives

We have shown a construction of the Transformer architecture from variational principles. A limitation of this paper is dependence on axioms: non-attentional models (MLP-Mixers, State Space Models, etc) that violate the symmetries require modified axioms. More mechanisms including mixture-of-expert MLPs are left for future work.

References

Nicholas Barnfield, Hugo Cui, and Yue M Lu. High-dimensional analysis of single-layer attention for sparse-token classification. *arXiv preprint arXiv:2509.25153*, 2025.

Michael M. Bronstein, Joan Bruna, Taco Cohen, and Petar Veličković. Geometric deep learning: Grids, groups, graphs, geodesics, and gauges. *arXiv preprint arXiv:2104.13478*, 2021.

Pierre Curie. Sur la symétrie dans les phénomènes physiques, symétrie d'un champ électrique et d'un champ magnétique. *Journal de physique théorique et appliquée*, 3(1):393–415, 1894.

Mostafa Dehghani, Stephan Gouws, Oriol Vinyals, Jakob Uszkoreit, and Lukasz Kaiser. Universal transformers. In *International Conference on Learning Representations*, 2019. URL https://openreview.net/forum?id=HyzdRiR9Y7.

Mostafa Dehghani, Josip Djolonga, Basil Mustafa, Piotr Padlewski, Jonathan Heek, Justin Gilmer, Andreas Peter Steiner, Mathilde Caron, Robert Geirhos, Ibrahim Alabdulmohsin, et al. Scaling vision transformers to 22 billion parameters. In *International Conference on Machine Learning*, pages 7480–7512. PMLR, 2023.

Changqing Fu and Laurent D Cohen. Conic activation functions. In *Proceedings of UniReps: the Second Workshop on Unifying Representations in Neural Models*, Proceedings of Machine Learning Research. PMLR, 2024.

Takashi Furuya, Maarten V. de Hoop, and Gabriel Peyré. Transformers are universal in-context learners. In *The Thirteenth International Conference on Learning Representations*, 2025. URL https://openreview.net/forum?id=6S4WQD1LZR.

Byeongho Heo, Song Park, Dongyoon Han, and Sangdoo Yun. Rotary position embedding for vision transformer. In *European Conference on Computer Vision*, pages 289–305. Springer, 2024.

Sibylle Marcotte, Rémi Gribonval, and Gabriel Peyré. Transformative or conservative? conservation laws for resnets and transformers. In *International Conference on Machine Learning*, 2025. URL https://openreview.net/forum?id=aTBwCSkPxv.

Charles H Martin and Christopher Hinrichs. Setol: A semi-empirical theory of (deep) learning. *arXiv preprint arXiv:2507.17912*, 2025.

Sharan Narang, Hyung Won Chung, Yi Tay, Liam Fedus, Thibault Févry, Michael Matena, Karishma Malkan, Noah Fiedel, Noam Shazeer, Zhenzhong Lan, et al. Do transformer modifications transfer across implementations and applications? In *Proceedings of the Conference on Empirical Methods in Natural Language Processing*, pages 5758–5773, 2021.

Noam Shazeer. Glu variants improve transformer. *arXiv preprint arXiv:2002.05202*, 2020.

Richard Sutton. The bitter lesson. http://www.incompleteideas.net/IncIdeas/BitterLesson.html, 2019. Accessed: 2025-10-18.

Veeravalli S. Varadarajan. *Lie Groups, Lie Algebras, and Their Representations*, volume 102. Springer, 2013.

Ashish Vaswani, Noam Shazeer, Niki Parmar, Jakob Uszkoreit, Llion Jones, Aidan N. Gomez, Lukasz Kaiser, and Illia Polosukhin. Attention is all you need. In *Advances in Neural Information Processing Systems*, volume 30, 2017.

A Expanded Proofs

Lemma 2 (The Benefit of Depth)**.** *Suppose* $\lambda_{MLP}^{\boldsymbol{W}(t)}(\boldsymbol{X}) \coloneqq \lambda_{MLP}(\boldsymbol{X}\boldsymbol{W}(t))\boldsymbol{W}'(t)$ *and* $\lambda_{A}^{\boldsymbol{W}(t)}(\boldsymbol{X}) \coloneqq \lambda_{A}(\boldsymbol{X}\boldsymbol{W}(t))\boldsymbol{W}'(t)$*, then the parallel and the split schemes asymptotically coincide:*

$$\lim_{T\to\infty}\prod_{t=0}^{T-1}(1+\lambda_{MLP}^{\boldsymbol{W}(t/T)})(1+\lambda_{A}^{\boldsymbol{W}(t/T)}) = \lim_{T\to\infty}\prod_{t=0}^{T-1}(1+\lambda_{MLP}^{\boldsymbol{W}(t/T)}+\lambda_{A}^{\boldsymbol{W}(t/T)}).$$

Proof. This result follows from Lemma 1 and the convergence properties of discretization schemes for the ODE $\dot{\boldsymbol{X}} = \lambda_{\text{MLP}}^{\boldsymbol{W}(t)}(\boldsymbol{X}) + \lambda_{\text{A}}^{\boldsymbol{W}(t)}(\boldsymbol{X})$, where the parameters $\boldsymbol{W}(t)$ make the operators time-dependent.

The parallel scheme (right-hand side) corresponds to the standard Euler discretization with step size $1/T$. Setting $t_k = k/T$, each term is $1+\frac{1}{T}(\lambda_{\text{MLP}}^{\boldsymbol{W}(t_k)}+\lambda_{\text{A}}^{\boldsymbol{W}(t_k)})+O(1/T^2)$. The product over T steps approximates the time-ordered exponential $\mathcal{T}\exp\left(\int_0^1(\lambda_{\text{MLP}}^{\boldsymbol{W}(t)}(\boldsymbol{X})+\lambda_{\text{A}}^{\boldsymbol{W}(t)}(\boldsymbol{X}))\,dt\right)$ as $T\to\infty$, with a global error of $O(1/T)$.

The split scheme (left-hand side) is a split-step Euler discretization. Expanding the product for a single step yields:

$$\left(1+\frac{1}{T}\lambda_{\text{MLP}}^{\boldsymbol{W}(t_k)}\right)\left(1+\frac{1}{T}\lambda_{\text{A}}^{\boldsymbol{W}(t_k)}\right) = 1+\frac{1}{T}\left(\lambda_{\text{MLP}}^{\boldsymbol{W}(t_k)}+\lambda_{\text{A}}^{\boldsymbol{W}(t_k)}\right)+\frac{1}{T^2}\left(\lambda_{\text{MLP}}^{\boldsymbol{W}(t_k)}\lambda_{\text{A}}^{\boldsymbol{W}(t_k)}\right).$$

This matches the parallel scheme with an extra interaction term $\frac{1}{T^2}(\lambda_{\text{MLP}}^{\boldsymbol{W}(t_k)}\lambda_{\text{A}}^{\boldsymbol{W}(t_k)})$. Since this local error is $O(1/T^2)$, the cumulative error over T steps is $T\times O(1/T^2) = O(1/T)$, which vanishes as $T\to\infty$. Thus, by the Lie-Trotter formula (Lemma 1), both schemes converge to the same limit. □

Lemma 3 (Linearized Transformers As Fields)**.** *Suppose* n *is even, and then there exists parameters* $\boldsymbol{W}_{in}, \boldsymbol{W}_{out}, \boldsymbol{Q}_i, \boldsymbol{K}_i, \boldsymbol{V}_i$ *such that equation 4 is associated with the field*

$$V(\boldsymbol{X}) = \operatorname{Tr}(\boldsymbol{X}\boldsymbol{W}\boldsymbol{X}^*) + \frac{1}{\sqrt{C_A}}\sum_{i=1}^{n/2}\operatorname{Tr}(\boldsymbol{X}\boldsymbol{W}_{Ai}\boldsymbol{X}^*\boldsymbol{X}\boldsymbol{W}_{Bi}^*\boldsymbol{X}^*).$$

Proof. We separate the potential into linear and interaction terms $V = V_{\text{lin}} + V_{\text{int}}$, and compute the Wirtinger derivative $\partial V/\partial\boldsymbol{X}^*$ to show it matches $\dot{\boldsymbol{X}}$. Treat $\boldsymbol{X}$ and $\boldsymbol{X}^*$ as independent variables.

For the linear term, the differential $\mathrm{d}V_{\text{lin}} = \operatorname{Tr}(\mathrm{d}\boldsymbol{X}\boldsymbol{W}\boldsymbol{X}^*) + \operatorname{Tr}(\boldsymbol{X}\boldsymbol{W}\,\mathrm{d}\boldsymbol{X}^*)$. The term with $\mathrm{d}\boldsymbol{X}^*$ is $\operatorname{Tr}(\boldsymbol{X}\boldsymbol{W}\,\mathrm{d}\boldsymbol{X}^*) = \operatorname{Tr}(\mathrm{d}\boldsymbol{X}^*\boldsymbol{X}\boldsymbol{W})$, so $\partial V_{\text{lin}}/\partial\boldsymbol{X}^* = \boldsymbol{X}\boldsymbol{W}$.

For the interaction term, consider one term $\operatorname{Tr}(\boldsymbol{X}\boldsymbol{A}\boldsymbol{X}^*\boldsymbol{X}\boldsymbol{B}\boldsymbol{X}^*)$. The differential is $\operatorname{Tr}(\mathrm{d}\boldsymbol{X}\boldsymbol{A}\boldsymbol{X}^*\boldsymbol{X}\boldsymbol{B}\boldsymbol{X}^*)+\operatorname{Tr}(\boldsymbol{X}\boldsymbol{A}\,\mathrm{d}\boldsymbol{X}^*\boldsymbol{X}\boldsymbol{B}\boldsymbol{X}^*)+\operatorname{Tr}(\boldsymbol{X}\boldsymbol{A}\boldsymbol{X}^*\,\mathrm{d}\boldsymbol{X}\boldsymbol{B}\boldsymbol{X}^*)+\operatorname{Tr}(\boldsymbol{X}\boldsymbol{A}\boldsymbol{X}^*\boldsymbol{X}\boldsymbol{B}\,\mathrm{d}\boldsymbol{X}^*)$. The terms with $\mathrm{d}\boldsymbol{X}^*$ are $\operatorname{Tr}(\boldsymbol{X}\boldsymbol{A}\,\mathrm{d}\boldsymbol{X}^*\boldsymbol{X}\boldsymbol{B}\boldsymbol{X}^*) = \operatorname{Tr}(\mathrm{d}\boldsymbol{X}^*\boldsymbol{X}\boldsymbol{B}\boldsymbol{X}^*\boldsymbol{X}\boldsymbol{A})$ and $\operatorname{Tr}(\boldsymbol{X}\boldsymbol{A}\boldsymbol{X}^*\boldsymbol{X}\boldsymbol{B}\,\mathrm{d}\boldsymbol{X}^*) = \operatorname{Tr}(\mathrm{d}\boldsymbol{X}^*\boldsymbol{X}\boldsymbol{A}\boldsymbol{X}^*\boldsymbol{X}\boldsymbol{B})$. Thus, the contribution to $\partial V_{\text{int}}/\partial\boldsymbol{X}^*$ is $\frac{1}{\sqrt{C_{\text{A}}}}\sum_{i=1}^{n/2}(\boldsymbol{X}\boldsymbol{W}_{\text{B}i}^*\boldsymbol{X}^*\boldsymbol{X}\boldsymbol{W}_{\text{A}i}+\boldsymbol{X}\boldsymbol{W}_{\text{A}i}\boldsymbol{X}^*\boldsymbol{X}\boldsymbol{W}_{\text{B}i}^*)$.

Overall, $\partial V/\partial\boldsymbol{X}^* = \boldsymbol{X}\boldsymbol{W} + \frac{1}{\sqrt{C_{\text{A}}}}\sum_{i=1}^{n/2}(\boldsymbol{X}\boldsymbol{W}_{\text{B}i}^*\boldsymbol{X}^*\boldsymbol{X}\boldsymbol{W}_{\text{A}i}+\boldsymbol{X}\boldsymbol{W}_{\text{A}i}\boldsymbol{X}^*\boldsymbol{X}\boldsymbol{W}_{\text{B}i}^*)$.

Now take $\boldsymbol{W} = \boldsymbol{W}_{\text{in}}\boldsymbol{W}_{\text{out}}^*$, $\boldsymbol{W}_{\text{A}i} = \boldsymbol{Q}_i\boldsymbol{K}_i^*$, $\boldsymbol{W}_{\text{B}i} = \boldsymbol{V}_i\boldsymbol{O}_i^*$. With the pairing condition $\boldsymbol{Q}_i\boldsymbol{K}_i^* = \boldsymbol{V}_{i+n/2}\boldsymbol{O}_{i+n/2}^*$ and $\boldsymbol{Q}_{i+n/2}\boldsymbol{K}_{i+n/2}^* = \boldsymbol{V}_i\boldsymbol{O}_i^*$ (ensuring symmetry), the derivative matches $\dot{\boldsymbol{X}}$ for the ODE. □

Lemma 4 (Canonical Form of Matrix Fields)**.** *Under Axioms 1, 2, and 3, the matrix potential takes the form of* $V(\boldsymbol{X}) = \operatorname{Tr} f(\boldsymbol{X}\boldsymbol{W}_1\boldsymbol{X}^*,\ldots,\boldsymbol{X}\boldsymbol{W}_n\boldsymbol{X}^*)$ *for some analytic spectral function* $f:\mathbb{C}^n\to\mathbb{C}$.

Proof. First, we check that the axioms hold for the form of V: for all $\boldsymbol{P},\boldsymbol{R}$ in the condition, by definitions of unitary group and centralizers, we have

$$\begin{aligned} V(\boldsymbol{P}\boldsymbol{X}\boldsymbol{R}^*) &= \operatorname{Tr} f(\{\boldsymbol{P}\boldsymbol{X}\boldsymbol{R}^*\boldsymbol{W}_i\boldsymbol{R}\boldsymbol{X}^*\boldsymbol{P}^*\}_{i=1}^n) \\ &= \operatorname{Tr} f(\{\boldsymbol{X}\boldsymbol{W}_i\boldsymbol{X}^*\}_{i=1}^n) \\ &= V(\boldsymbol{X}). \end{aligned}$$

Next, we show the uniqueness of the form of V. Step 1: by Axiom 1, the matrix potential has an expansion form $V(\boldsymbol{X}) = f_1(\boldsymbol{X})$ for some analytic $f_1 : \mathbb{C}^{N\times C} \to \mathbb{C}$.

Step 2: Suppose the polar decomposition of $\boldsymbol{X}$ is $\boldsymbol{X} = \boldsymbol{U}\boldsymbol{D}$ where $\boldsymbol{U} \in U(N)$ and $\boldsymbol{D} = \sqrt{\boldsymbol{X}^*\boldsymbol{X}}$ is positive semi-definite. With Axiom 2, taking $\boldsymbol{P} = U^* \in U(N)$, we have $V(\boldsymbol{U}\boldsymbol{X}) = V(\boldsymbol{U}^*\boldsymbol{X}) = V(\boldsymbol{U}^*\boldsymbol{U}\boldsymbol{D}) = V(\boldsymbol{D})$, which depends solely on $\boldsymbol{D}^2 := X^*X$.

Step 3: We seek quantities $I(\boldsymbol{X})$ such that $I(\boldsymbol{X}\boldsymbol{R}^*) = I(\boldsymbol{X})$ for all $\boldsymbol{R} \in G$. Consider the composite matrix $\boldsymbol{Y} = \boldsymbol{X}\boldsymbol{M}\boldsymbol{X}^*$ for some fixed matrix $\boldsymbol{M} \in \mathbb{C}^{C\times C}$. Under the transformation $\boldsymbol{X} \to \boldsymbol{X}\boldsymbol{R}^*$:

$$\boldsymbol{Y}' = (\boldsymbol{X}\boldsymbol{R}^*)\boldsymbol{M}(\boldsymbol{X}\boldsymbol{R}^*)^* = \boldsymbol{X}(\boldsymbol{R}^*\boldsymbol{M}\boldsymbol{R})\boldsymbol{X}^*$$

For $\boldsymbol{Y}$ to be invariant ($\boldsymbol{Y}' = \boldsymbol{Y}$), we require:

$$\boldsymbol{R}^*\boldsymbol{M}\boldsymbol{R} = \boldsymbol{M} \implies [\boldsymbol{M}, \boldsymbol{R}] = 0$$

for all $\boldsymbol{R} \in G$. By the double commutant theorem for finite-dimensional C^*-algebras, the set of matrices that commute with every unitary in the commutant of an algebra is the algebra itself. Therefore, the matrices $\boldsymbol{M}$ that make $\boldsymbol{X}\boldsymbol{M}\boldsymbol{X}^*$ invariant are exactly the elements of the algebra $\mathcal{W}$ generated by the fixed matrices and their adjoints $\{\boldsymbol{I}, \boldsymbol{W}_i, \boldsymbol{W}_i^*\}$.

Step 4: Combining steps 2 and 3, by the double commutant theorem, the scalar invariants of a matrix $\boldsymbol{K} := \boldsymbol{X}^*\boldsymbol{X}$ under conjugation by G are generated by the traces of products of $\boldsymbol{K}$ with the elements of the commutant of G.

$$V(\boldsymbol{X}) = f(\{\mathrm{Tr}((\boldsymbol{X}^*\boldsymbol{X})^{k_1}\boldsymbol{A}_1(\boldsymbol{X}^*\boldsymbol{X})^{k_2}\boldsymbol{A}_2\dots) \mid k_j \geq 1, \boldsymbol{A}_j \in \mathcal{W}\})$$

Or in series form,

$$V(\boldsymbol{X}) = \sum_{i,\boldsymbol{A}} c_{k,\boldsymbol{A}} \prod_j \mathrm{Tr}(\prod_m (\boldsymbol{X}^*\boldsymbol{X})^{k_{jm}}\boldsymbol{A}_{jm}).$$

Without loss of generality, take $k_j = 1$, and $\boldsymbol{A}_j$ are linear bases of $\mathcal{W}$. To avoid notational confusion we still use $\boldsymbol{W}$ to denote the parameters.

□

Theorem 5 (Optimality of Linearized Transformers)**.** *Under Axioms 1, 2, 3, Definition 4 is the minimal nontrivial interaction ODE.*

Proof. By Lemma 4, the matrix potential is $V(\boldsymbol{X}) = \mathrm{Tr} f(\boldsymbol{X}\boldsymbol{W}_1\boldsymbol{X}^*, \dots, \boldsymbol{X}\boldsymbol{W}_n\boldsymbol{X}^*)$ for some analytic spectral function $f : \mathbb{C}^n \to \mathbb{C}$.

In the spirit of effective field theory, we consider the low-order expansion of f around the origin, truncating at the lowest nontrivial interactive terms (i.e., up to quadratic in the arguments $\{z_k\}$ of f, corresponding to quartic terms in V). Higher-order terms are irrelevant at low energy scales and can be neglected for the effective description. Thus,

$$V(\boldsymbol{X}) = \mathrm{Tr}(c_0\boldsymbol{I} + \sum_{i=1}^{n} c_{1,i}\boldsymbol{X}\boldsymbol{W}_{\mathrm{A}i}\boldsymbol{X}^* + \sum_{i=1}^{\frac{n}{2}} c_{2,i}\boldsymbol{X}\boldsymbol{W}_{\mathrm{A}i}\boldsymbol{X}^*\boldsymbol{X}\boldsymbol{W}_{\mathrm{B}i}\boldsymbol{X}^*),$$

where we have relabeled the $\boldsymbol{W}_{1,i}$ as $\boldsymbol{W}_i$ for simplicity, and dropped higher-order contributions.

The constant term provides no dynamics. The quadratic terms in V (linear in f) yield the feed-forward (MLP-like) component in the ODE, which can be fused: $\sum_{i=1}^{n} c_{1,i}\mathrm{Tr}(\boldsymbol{X}\boldsymbol{W}_i\boldsymbol{X}^*) = \mathrm{Tr}(\boldsymbol{X}\boldsymbol{W}_{\text{in}}\boldsymbol{W}_{\text{out}}^*\boldsymbol{X}^*)$ by redefining $\boldsymbol{W}_{\text{in}}, \boldsymbol{W}_{\text{out}}$ appropriately (with $C_{\text{MLP}} = nC_{\text{A}}$ under Axiom 4).

The quartic terms in V (quadratic in f) represent the first nontrivial interactions. The general form is $\sum_{i,j} c_{2,ij}\mathrm{Tr}(\boldsymbol{X}\boldsymbol{W}_{\mathrm{A}i}\boldsymbol{X}^*\boldsymbol{X}\boldsymbol{W}_{\mathrm{B}j}\boldsymbol{X}^*)$. By relabeling indices and applying Lemma 3 (which requires pairing terms with n even and parameter conditions like $\boldsymbol{Q}_i\boldsymbol{K}_i^* = \boldsymbol{V}_{i+n/2}\boldsymbol{O}_{i+n/2}^*$ to ensure the potential exists), this matches the attention component of the linearized Transformer ODE under those constraints. Thus, Definition 4 (with the noted parameter tying) is the leading interactive ODE consistent with the axioms. □

Lemma 7 (Softmax Transformers)**.** *Suppose n is even. There exists parameters such that the ODE $\dot{\boldsymbol{X}} = \sum_{i=1}^{n} \mathrm{Softmax}(C_A^{-1/2}\boldsymbol{X}\boldsymbol{Q}_i\boldsymbol{K}_i^*\boldsymbol{X}^*)\boldsymbol{X}\boldsymbol{V}_i\boldsymbol{O}_i^*$ is associated with the field $V(\boldsymbol{X}) = \sqrt{C_A}\sum_{i=1}^{n}\sum_{j=1}^{N}\log\sum_{k=1}^{N}\exp([\frac{1}{\sqrt{C_A}}\boldsymbol{X}\boldsymbol{W}_{Ai}\boldsymbol{X}^*]_{jk})$.*

Proof. Let $y_{jk} := (\frac{1}{\sqrt{C_{\mathrm{A}}}} \boldsymbol{X}\boldsymbol{W}_{\mathrm{A}i}\boldsymbol{X}^*)_{jk}$ be the input of softmax. The free energy function has gradient softmax: $\partial(\log \sum_k \exp \boldsymbol{S}_{jk})/\partial \boldsymbol{S}_{jk} = \exp \boldsymbol{S}_{jk}/\sum_k \exp \boldsymbol{S}_{jk} = \mathrm{Softmax}(\boldsymbol{S}_{jk})$ for $j = 1, \ldots, N$. The full derivative is $\sum_{i=1}^{n} \mathrm{Softmax}(C_{\mathrm{A}}^{-1/2}\boldsymbol{X}\boldsymbol{W}_{\mathrm{A}i}\boldsymbol{X}^*)\boldsymbol{X}\boldsymbol{W}_{\mathrm{A}i}$. Take $\boldsymbol{W}_{\mathrm{A}i} = \boldsymbol{Q}_i\boldsymbol{K}_i^* = \boldsymbol{V}_i\boldsymbol{O}_i^*$, then setting $\boldsymbol{Q}_i\boldsymbol{K}_i^* = \boldsymbol{V}_i\boldsymbol{O}_i^*$ recovers the ODE. Note that we leave the case with untied parameters for future work. □

Lemma 8 (Sparse Attention)**.** *Under the pairwise non-commutative condition $[\lambda_{MLP}, \lambda_A] = \beta\lambda_A$, the sequential composition of the layers is equivalent to a single effective flow generated by:*

$$\exp(\lambda_{MLP})\exp(\lambda_A) = \exp\left(\lambda_{MLP} + G(\beta)\cdot\lambda_A\right)$$

where the effective interaction gate $G(\beta)$ is given by the generating function of the Bernoulli numbers: $G(\beta) = \frac{\beta}{1-e^{-\beta}}$. As $\beta \to -\infty$, $G(\beta) \sim |\beta|e^{-|\beta|} \to 0$.

Proof. Using the constraint $[\lambda_{\mathrm{MLP}}, \lambda_{\mathrm{A}}] = \beta\lambda_{\mathrm{A}}$, we evaluate the nested terms:

1. Terms with only λ_{MLP} nesting:

$$\mathrm{ad}^k_{\lambda_{\mathrm{MLP}}}(\lambda_{\mathrm{A}}) = [\lambda_{\mathrm{MLP}}, [\ldots, [\lambda_{\mathrm{MLP}}, \lambda_{\mathrm{A}}]\ldots]] = \beta^k\lambda_{\mathrm{A}}$$

2. Terms mixed with λ_{A} nesting: Since any commutator results in a scalar multiple of λ_{A}, and $[\lambda_{\mathrm{A}}, \lambda_{\mathrm{A}}] = 0$, all terms involving nested λ_{A} (e.g., $[\lambda_{\mathrm{A}}, [\lambda_{\mathrm{MLP}}, \lambda_{\mathrm{A}}]] = [\lambda_{\mathrm{A}}, \beta\lambda_{\mathrm{A}}] = 0$) vanish.

The BCH series simplifies to a linear combination of λ_{MLP} and λ_{A}:

$$Z = \lambda_{\mathrm{MLP}} + \left(1 + \frac{1}{2}\beta + \frac{1}{12}\beta^2 + \frac{1}{720}\beta^4 + \ldots\right)\lambda_{\mathrm{A}}$$

The parenthetical series corresponds exactly to the Taylor expansion of the Bernoulli function generating function (often associated with the Bose-Einstein distribution in physics):

$$G(\beta) = \sum_{k=0}^{\infty} \frac{B_k^+}{k!}\beta^k = \frac{\beta}{1-e^{-\beta}}$$

Substituting $G(\beta)$ back into the expression for Z:

$$Z = \lambda_{\mathrm{MLP}} + \frac{\beta}{1-e^{-\beta}}\lambda_{\mathrm{A}}$$

□