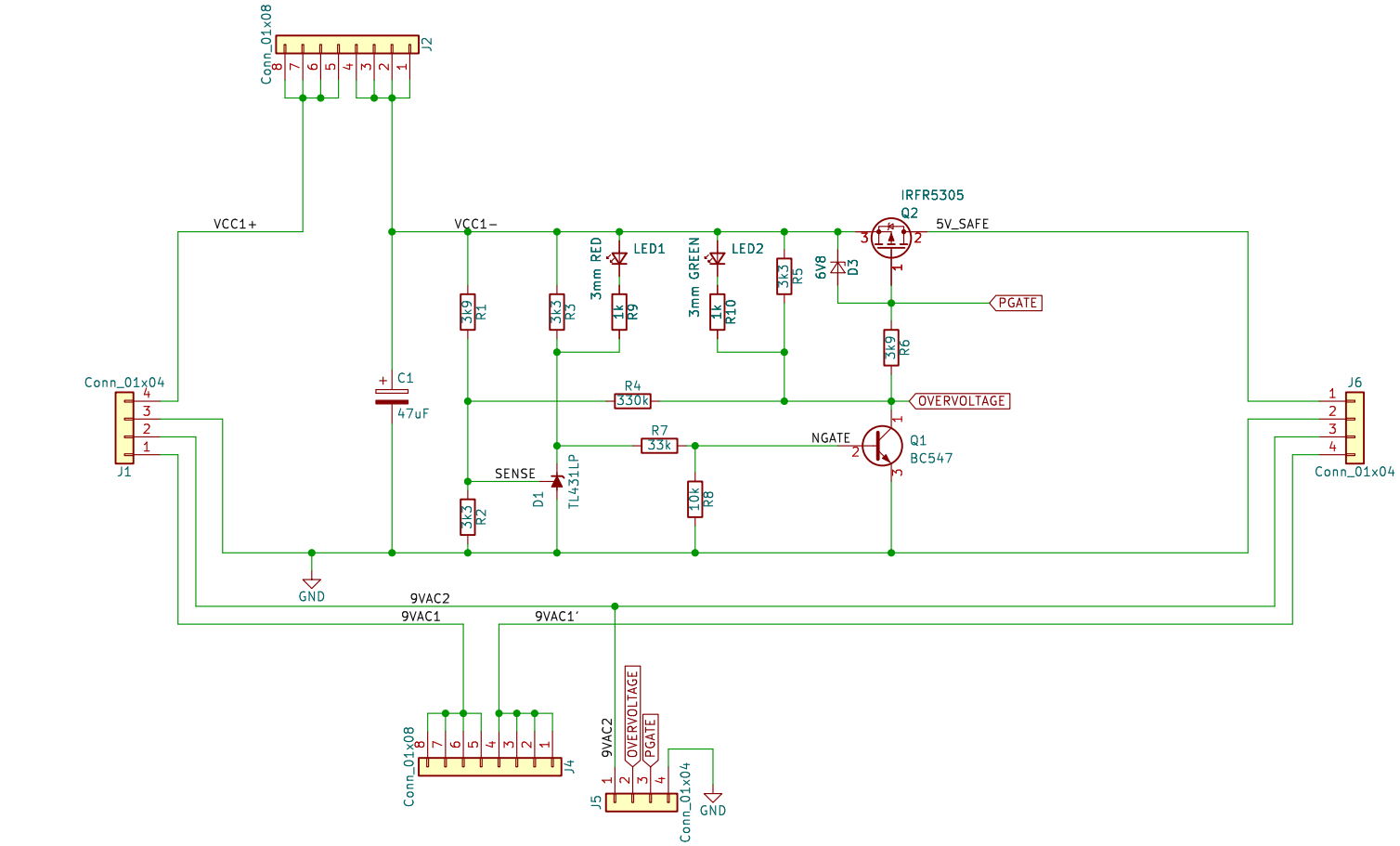

MK1
Mounting_Hole

MK2
Mounting_Hole

Sheet: /
File: C64Saver2.kicad_sch

Title: C64 Saver

Size: A4	Date: 2018-09-23	**Rev:** 2.4
KiCad E.D.A. kicad 7.0.0-da2b9df05c~171~ubuntu20.04.1		Id: 1/1