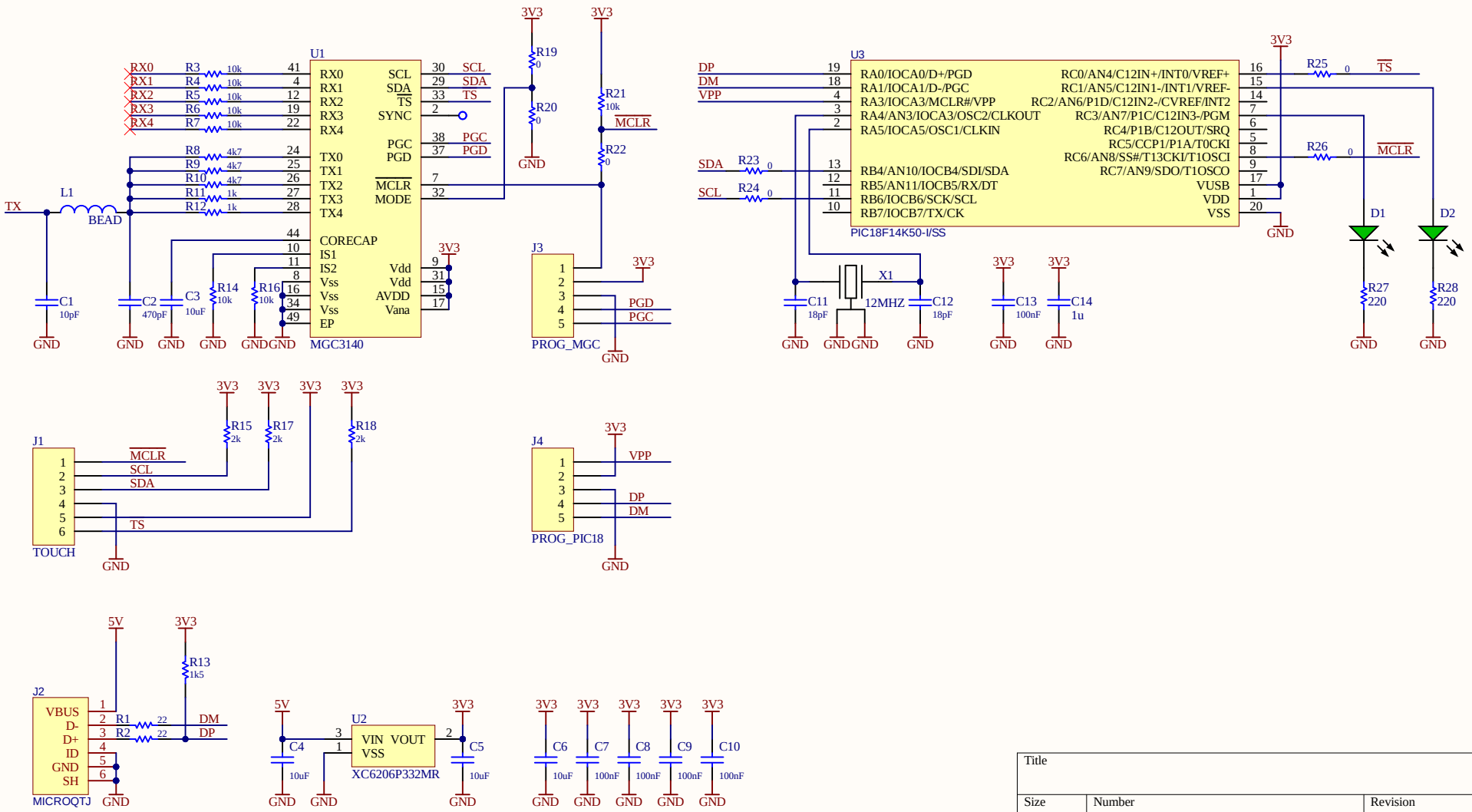
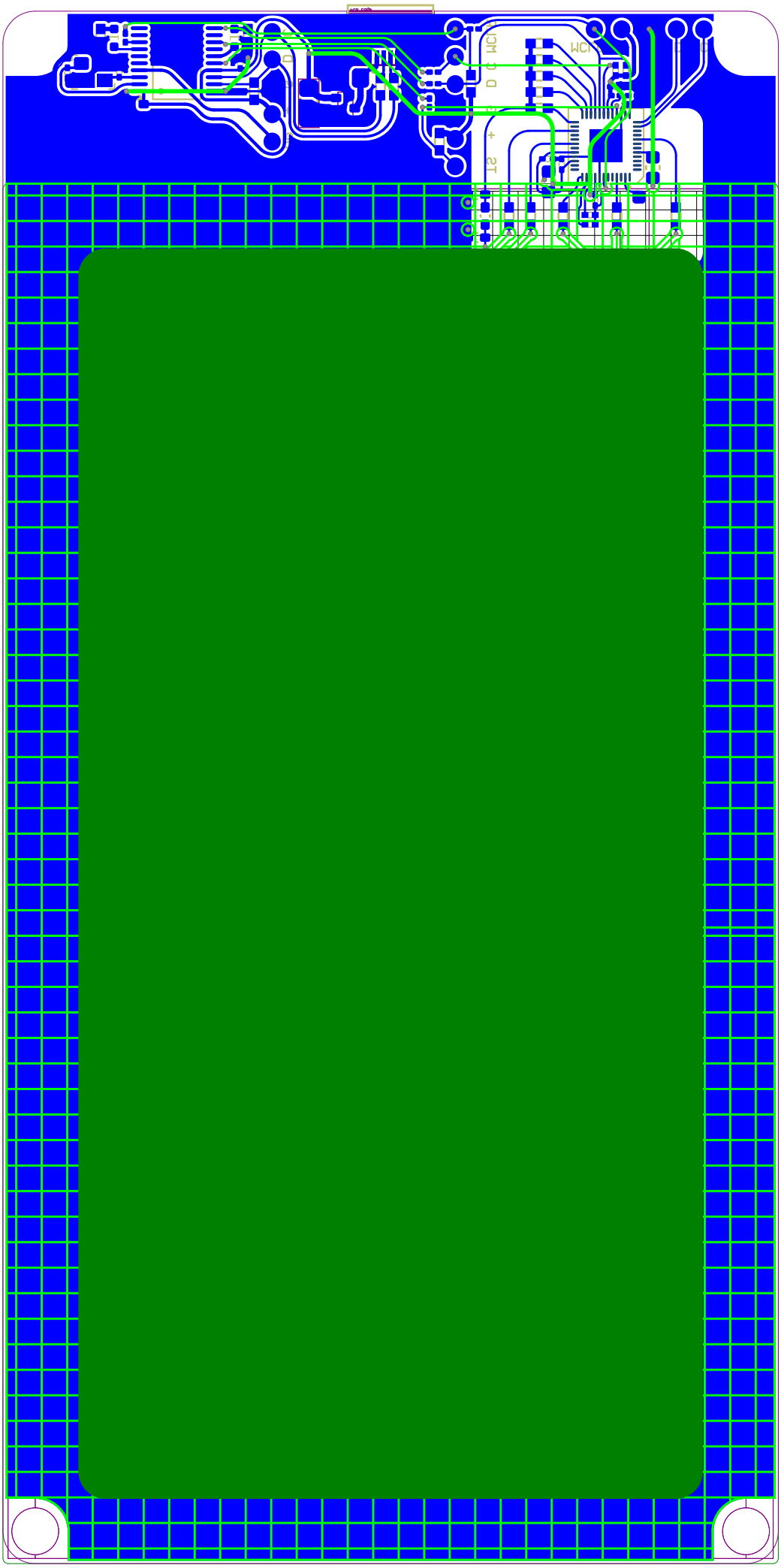
Title		
Size A4	Number	Revision
Date: 1/06/2024	Sheet of	
File: D:___PCB\gc_mgc3140\schematic.SchDoc	Drawn By: