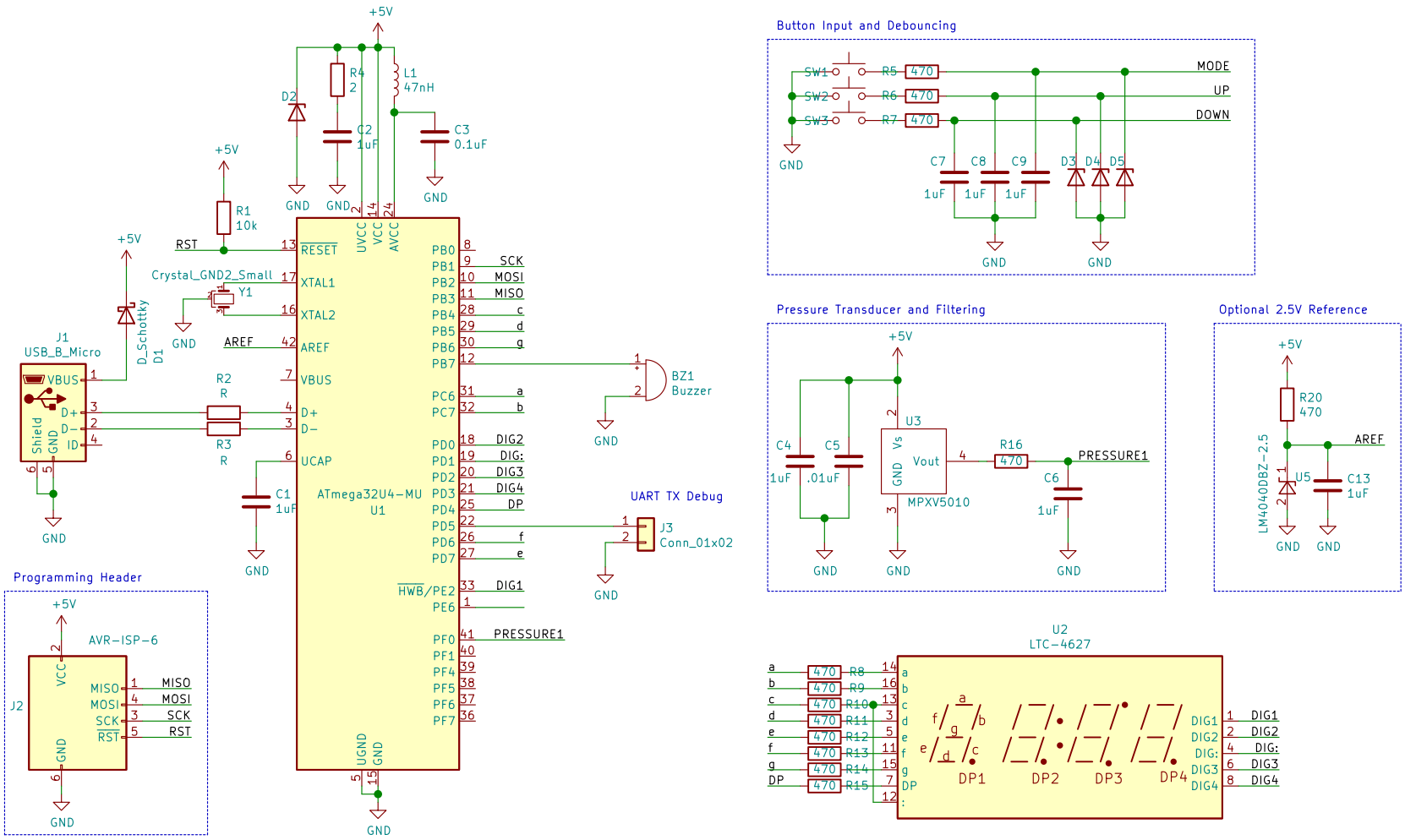
+5V
R4
2
L1
47nH
D2
C2
1uF
C3
0.1uF
GND
R1
10k
RST
Crystal_GND2_Small
Y1
AREF
J1
USB_B_Micro
VBUS
D+
D−
ID
Shield
GND
D_Schottky
D1
R2
R
R3
R
C1
1uF
ATmega32U4−MU
U1
RESET
XTAL1
XTAL2
AREF
VBUS
D+
D−
UCAP
UVCC
VCC
AVCC
UGND
PB0
PB1
PB2
PB3
PB4
PB5
PB6
PB7
PC6
PC7
PD0
PD1
PD2
PD3
PD4
PD5
PD6
PD7
HWB/PE2
PE6
PF0
PF1
PF4
PF5
PF6
PF7
SCK
MOSI
MISO
c
d
g
a
b
DIG2
DIG:
DIG3
DIG4
DP
f
e
DIG1
PRESSURE1
BZ1
Buzzer
UART TX Debug
J3
Conn_01x02
Programming Header
AVR−ISP−6
J2
VCC
MISO
MOSI
SCK
RST
GND
Button Input and Debouncing
SW1
SW2
SW3
R5
R6
R7
470
MODE
UP
DOWN
C7
C8
C9
1uF
D3
D4
D5
Pressure Transducer and Filtering
U3
MPXV5010
Vs
GND
Vout
C4
C5
.01uF
R16
C6
Optional 2.5V Reference
R20
470
AREF
U5
LM4040DBZ−2.5
C13
1uF
U2
LTC−4627
R8
R9
R10
R11
R12
R13
R14
R15
DP1
DP2
DP3
DP4
DIG1
DIG2
DIG:
DIG3
DIG4