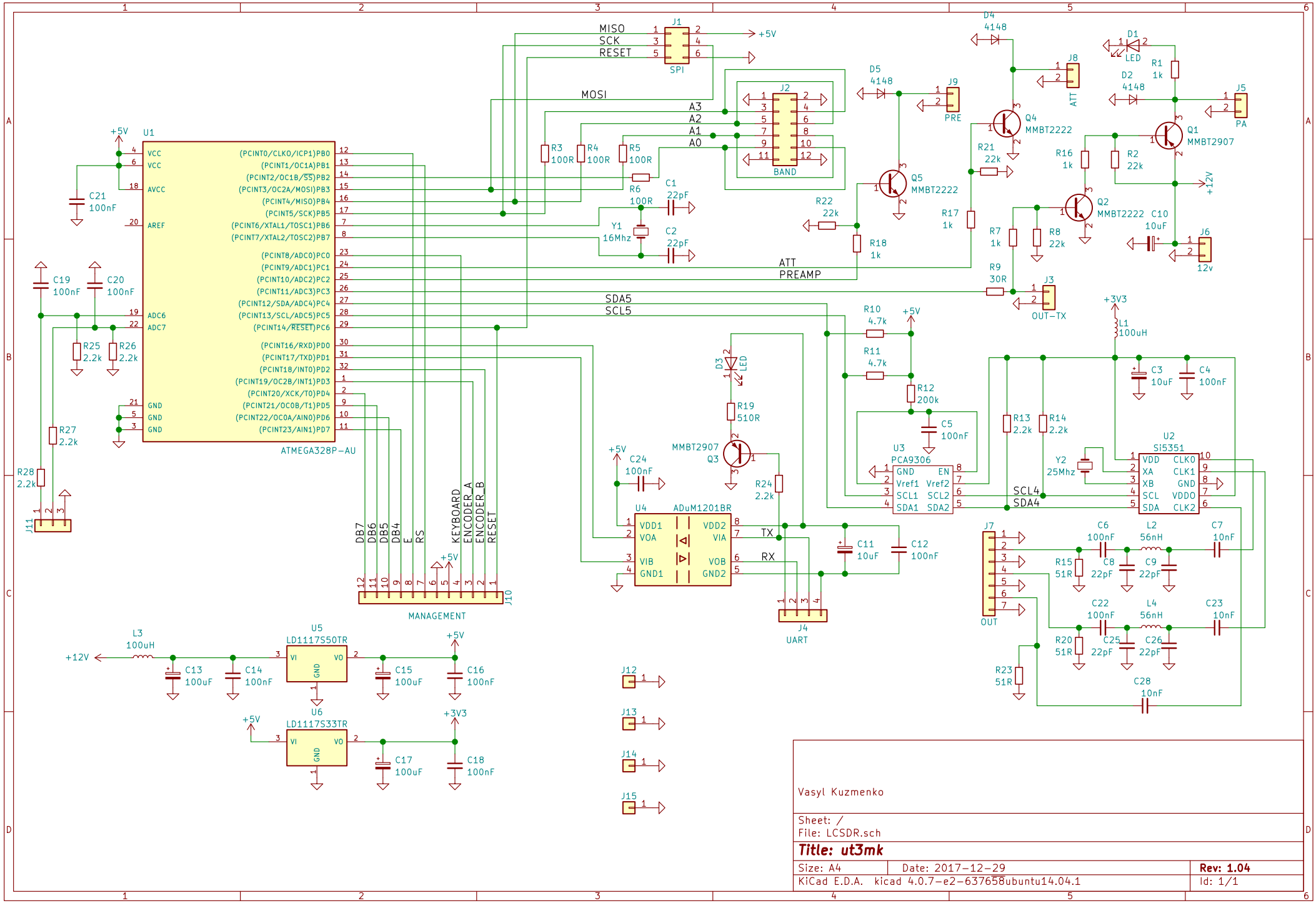
U1
ATMEGA328P-AU
VCC
AVCC
AREF
ADC6
ADC7
GND
(PCINT0/CLKO/ICP1)PB0
(PCINT1/OC1A)PB1
(PCINT2/OC1B/SS)PB2
(PCINT3/OC2A/MOSI)PB3
(PCINT4/MISO)PB4
(PCINT5/SCK)PB5
(PCINT6/XTAL1/TOSC1)PB6
(PCINT7/XTAL2/TOSC2)PB7
(PCINT8/ADC0)PC0
(PCINT9/ADC1)PC1
(PCINT10/ADC2)PC2
(PCINT11/ADC3)PC3
(PCINT12/SDA/ADC4)PC4
(PCINT13/SCL/ADC5)PC5
(PCINT14/RESET)PC6
(PCINT16/RXD)PD0
(PCINT17/TXD)PD1
(PCINT18/INT0)PD2
(PCINT19/OC2B/INT1)PD3
(PCINT20/XCK/T0)PD4
(PCINT21/OC0B/T1)PD5
(PCINT22/OC0A/AIN0)PD6
(PCINT23/AIN1)PD7
MISO
SCK
RESET
MOSI
A3
A2
A1
A0
ATT
PREAMP
SDA5
SCL5
DB7
DB6
DB5
DB4
E
RS
KEYBOARD
ENCODER_A
ENCODER_B
RESET
J1
SPI
J2
BAND
J3
OUT-TX
J4
UART
J5
PA
J6
12v
J7
OUT
J8
ATT
J9
PRE
J10
MANAGEMENT
J11
J12
J13
J14
J15
U2
Si5351
VDD
XA
XB
SCL
SDA
CLK0
CLK1
GND
VDDO
CLK2
U3
PCA9306
GND
EN
Vref1
Vref2
SCL1
SCL2
SDA1
SDA2
SCL4
SDA4
U4
ADuM1201BR
VDD1
VOA
VIB
GND1
VDD2
VIA
VOB
GND2
TX
RX
U5
LD1117S50TR
U6
LD1117S33TR
VI
VO
GND
+5V
+12V
+3V3
Y1
16Mhz
Y2
25Mhz
Q1
MMBT2907
Q2
MMBT2222
Q3
MMBT2907
Q4
MMBT2222
Q5
MMBT2222
D1
LED
D2
4148
D3
LED
D4
4148
D5
4148
R1
1k
R2
22k
R3
100R
R4
100R
R5
100R
R6
100R
R7
1k
R8
22k
R9
30R
R10
4.7k
R11
4.7k
R12
200k
R13
2.2k
R14
2.2k
R15
51R
R16
1k
R17
1k
R18
1k
R19
510R
R20
51R
R21
22k
R22
22k
R23
51R
R24
2.2k
R25
2.2k
R26
2.2k
R27
2.2k
R28
2.2k
C1
22pF
C2
22pF
C3
10uF
C4
100nF
C5
100nF
C6
100nF
C7
10nF
C8
22pF
C9
22pF
C10
10uF
C11
10uF
C12
100nF
C13
100uF
C14
100nF
C15
100uF
C16
100nF
C17
100uF
C18
100nF
C19
100nF
C20
100nF
C21
100nF
C22
100nF
C23
10nF
C24
100nF
C25
22pF
C26
22pF
C28
10nF
L1
100uH
L2
56nH
L3
100uH
L4
56nH
Vasyl Kuzmenko
Sheet: /
File: LCSDR.sch
Title: ut3mk
Size: A4
Date: 2017-12-29
Rev: 1.04
KiCad E.D.A. kicad 4.0.7-e2-637658ubuntu14.04.1
Id: 1/1