RP2040 PicoHAL

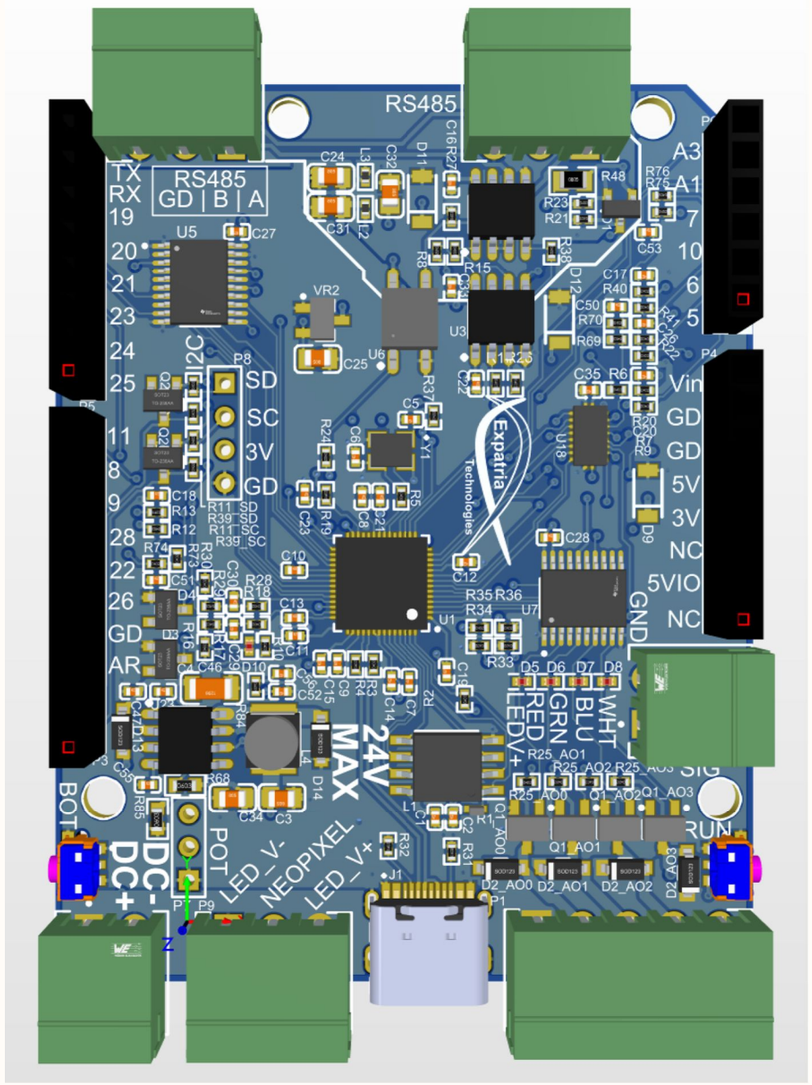

PicoHAL
RP2040_UNO_CNC_board.SchDoc

Mechanical

PCB
LOGO
Expatria Technologies

FID1 FID2 FID3

ZZ1
Assembly Note
These assemblies are ESD sensitive, ESD precautions shall be observed.

ZZ2
Assembly Note
These assemblies must be clean and free from flux and all contaminants. Use of no clean flux is not acceptable.

ZZ3
Assembly Note
These assemblies must comply with workmanship standards IPC-A-610 Class 2, unless otherwise specified.

Copyright Expatria Technologies 2023. This document describes Open Hardware and is licensed under the CERN-OHL-S v2. No warranty is implied or expressed.

Expatria Technologies
1136 Glade Court
Port Coquitlam, BC V3B 1R5
EMAIL: INFO@EXPATRIA.CA

SHEET	Title Sheet		
PROJECT	RP_UNO_CNC.PrjPCB	REV	A4
ENGR	AM	DOCUMENT	Title Sheet.SchDoc
SIZE	B	MODIFIED	2023-05-16 2:10:36 PM
		SHEET	1 / 8

PicoHAL Board

Outputs
5V_Outputs.SchDoc
STEP_Z
DIR_X
DIR_Y
DIR_Z
STEP_X
STEP_Y
SP_PW_A_ST
SP_DR_A_DIR
NEOPIXEL
STP_EN_XYZAB
TX_3V3
AUXOUT3
AUXOUT2
AUXOUT1
AUXOUT0
3V_SIG0
3V_SIG1
3V_SIG2
3V_SIG3
3V_SIG4
3V_SIG5
3V_SIG6
3V_SIG7
3V_SIG8
3V_SIG9
3V_SIG10
3V_SIG11
3V_SIG12
3V_SIG13
3V_SIG14
3V_SIG15
5V_SIG0
5V_SIG1
5V_SIG2
5V_SIG3
5V_SIG4
5V_SIG5
5V_SIG6
5V_SIG7
5V_SIG8
5V_SIG9
5V_SIG10
5V_SIG11
5V_SIG12
5V_SIG13
5V_SIG14
5V_SIG15
STEP_Z_5V
DIR_X_5V
DIR_Y_5V
DIR_Z_5V
STEP_X_5V
STEP_Y_5V
SP_PW_A_ST_5V
SP_DR_A_DIR_5V
NEOPIXEL_5V
STP_EN_XYZAB_5V
TX_5V0
WHITE
BLUE
GREEN
RED
SW2
SKRTLAE010
MP1
MP2
R1
DNP
R2
1KΩ±1%
QSPI_SS
QSPI_SD1
QSPI_SD2
L1
W25Q128JVSIQ_TR
/CS
DO_(IO1)
IO2
GND
VCC
IO
CLK
DI_(IO0)
QSPI_SD3
QSPI_SCLK
QSPI_SD0
C1
100nF
C2
4.7uF
GND
+3.3V
R19
10KΩ±1%
PICO_RUN
SW1
C23
100nF
XC6206P332MR
VR2
Vin
Vout
+5V
C24
22uF
C25
22uF
R10
1KΩ±1%
D10
0402 Green
VREG_1V1
USB_D_R_P
USB_D_R_N
R3
R4
22Ω±1%
USB_D_P
USB_D_N
U1
RP2040
IOVDD
GPIO0
GPIO1
GPIO2
GPIO3
GPIO4
GPIO5
GPIO6
GPIO7
GPIO8
GPIO9
GPIO10
GPIO11
GPIO12
GPIO13
GPIO14
GPIO15
TESTEN
XIN
XOUT
DVDD
SWCLK
SWDIO
RUN
GPIO16
GPIO17
PAD_GND
G29/A3
G28/A2
G27/A1
G26/A0
GPIO25
GPIO24
GPIO23
GPIO22
GPIO21
GPIO20
GPIO19
GPIO18
ADC3_MCU
Z_LIM
ADC1_MCU
SP_DR_A_DIR
DIR_Z
DIR_Y
DIR_X
SP_PW_A_ST
STEP_Z
STEP_Y
STEP_X
MOD_DIR
SPI1_RX/MISO
SPI1_CLK
SPI1_TX/MOSI
D5
0402 Red
D6
0402 Green
D7
0402 Blue
D8
0402 White
R33
R34
R35
R36
1KΩ±1%
P7
Header 3
ADC3
Simple Dimmer Connection
P8
Header 4
Pullups are on FET converter
I2C1_SDA
I2C1_SCL
I2C screen header
ADC3_IN
ADC1_IN
D3
BAT54S Schottky
D4
R18
R28
2.2KΩ±1%
C29
C30
100nF
R17
R29
R16
R30
5.1KΩ±1%
ADC1
C5
20pF
C6
Y1
YSX321SL
GND_2
CRYSTAL_2
CRYSTAL_1
GND_1
RP_XIN
RP_XOUT
R5
470Ω±1%
TXD_EXT
RXD_EXT
RX_3V3
TX_3V3
PICO_SWCLK
PICO_SWDIO
PICO_RUN
C7
C8
C9
1.0uF
Place 1uF near pin 45
C10
C11
C12
C13
C14
C15
C19
C21
Place 1uF near pin 44
Relay_VCC
AO0
AO1
AO2
AO3
FET_Driver.SchDoc
5V_GATE
DRAIN
AUXOUT0_EXT
AUXOUT1_EXT
AUXOUT2_EXT
AUXOUT3_EXT
P1
691322110005
R12
10KΩ±1%
R13
510Ω±1%
Y_LIM_5V
C18
470nF
R69
R70
X_LIM_5V
C50
R73
R74
Z_LIM_5V
C51
R75
R76
PROBE_5V
C53
R7
R9
HALT_5V
C20
R20
R22
FDHOLD_5V
C26
R40
R41
CYC/ST_5V
C17
Inputs
5V_Inputs.SchDoc
Y_LIM
X_LIM
Z_LIM
PROBE
FDHOLD
HALT
CYC/ST
RX_3V3
RX_5V0
R6
D13
B5819W SL
5V_Supply
5V_Power_Supply.SchDoc
PWR_IN_24V
POWER_OUT_5V
J2
691322110002
D9
ZMM5V6
P4
Header 8 female
P3
Header 10 female
P6
Header 6 female
P5
Header 8 female
SCL_5V
SDA_5V
SP_DR_A_DIR_5V
SP_PW_A_ST_5V
Z_LIM_5V
Y_LIM_5V
X_LIM_5V
STP_EN_XYZAB_5V
HALT_5V
FDHOLD_5V
CYC/ST_5V
PROBE_5V
ADC1
ADC3
DIR_Z_5V
DIR_Y_5V
DIR_X_5V
STEP_Z_5V
STEP_Y_5V
STEP_X_5V
RX_5V0
TX_5V0
J1
TYPE-C-31-M-12
USBC_CC1
USBC_CC2
R31
R32
5.1KΩ±1%
P10
691322110003
MODBUS
RS485.SchDoc
DIR
RXD
TXD
A
B
P2
SD
SC
FET__Converter.SchDoc
IO5V0
IO3V3
SDA_5V
SCL_5V
I2C1_SDA
I2C1_SCL
P9
NEOPIXEL_5V
J3
691322110002
Copyright Expatria Technologies 2023. This document describes Open Hardware and is licensed under the CERN-OHL-S v2. No warranty is implied or expressed.
Expatria Technologies
1136 Glade Court
Port Coquitlam, BC V3B 1R5
EMAIL: INFO@EXPATRIA.CA
SHEET RP2040 PicoHAL
PROJECT RP_UNO_CNC.PrjPCB
REV A4
ENGR AM
DOCUMENT RP2040_UNO_CNC_board.SchDoc
SIZE C
MODIFIED 2023-05-16 2:10:36 PM
SHEET 2 / 8

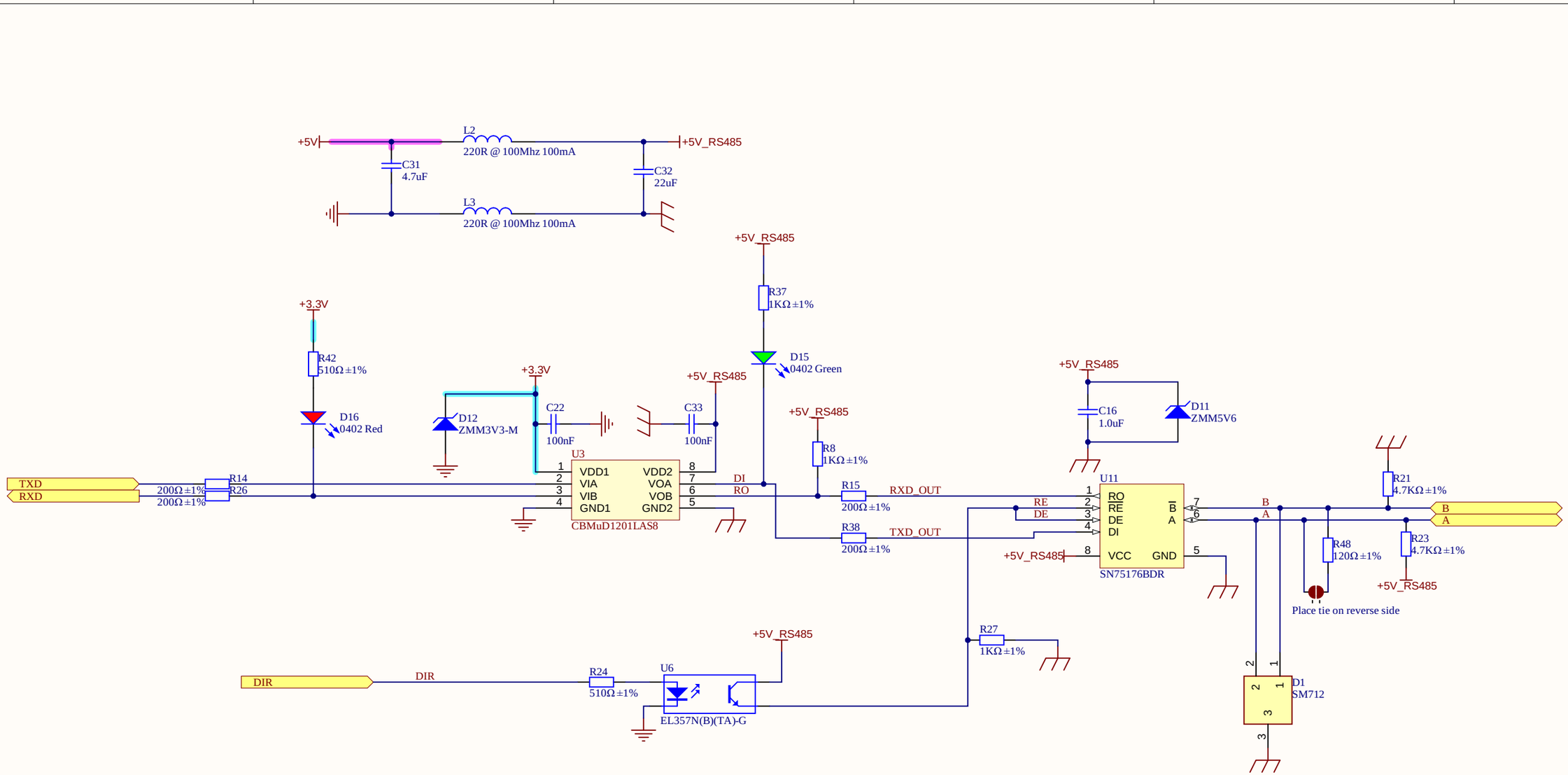

Copyright Expatria Technologies 2023. This document describes Open Hardware and is licensed under the CERN-OHL-S v2. No warranty is implied or expressed.

Expatria Technologies
1136 Glade Court
Port Coquitlam, BC V3B 1R5
EMAIL: INFO@EXPATRIA.CA

SHEET	RS485
PROJECT	RP_UNO_CNC.PrjPCB
REV	A4
ENGR	AM
DOCUMENT	RS485.SchDoc
SIZE	B
MODIFIED	2023-05-16 2:10:36 PM
SHEET	3 / 8

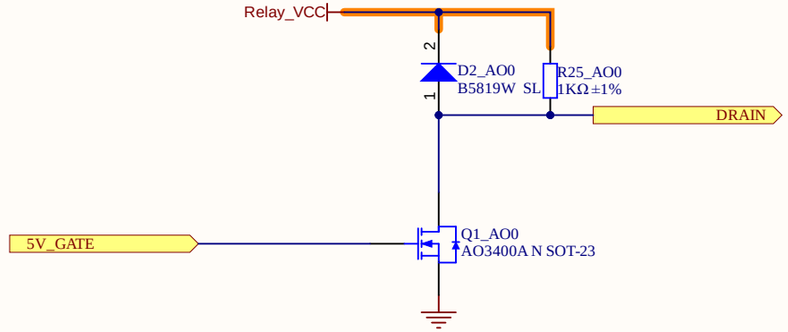

Copyright Expatria Technologies 2023. This document describes Open Hardware and is licensed under the CERN-OHL-S v2. No warranty is implied or expressed.

Expatria Technologies
1136 Glade Court
Port Coquitlam, BC V3B 1R5

EMAIL: INFO@EXPATRIA.CA

SHEET	FET Driver
PROJECT	RP_UNO_CNC.PrjPCB
REV	A4
ENGR	AM
DOCUMENT	FET_Driver.SchDoc
SIZE	B
MODIFIED	2023-05-16 2:10:37 PM
SHEET	4 / 8

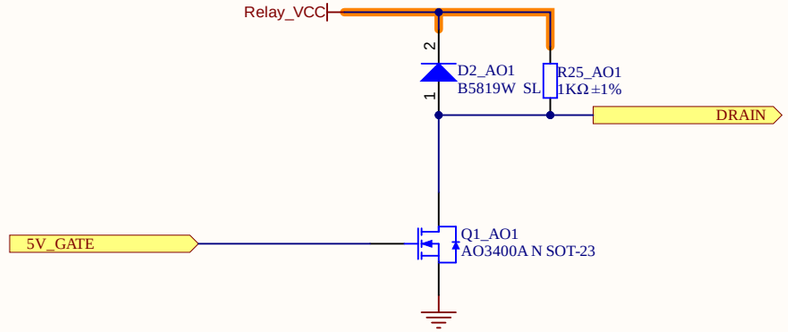

Copyright Expatria Technologies 2023. This document describes Open Hardware and is licensed under the CERN-OHL-S v2. No warranty is implied or expressed.

Expatria Technologies
1136 Glade Court
Port Coquitlam, BC V3B 1R5

EMAIL: INFO@EXPATRIA.CA

SHEET	FET Driver		
PROJECT	RP_UNO_CNC.PrjPCB	REV	A4
ENGR	AM	DOCUMENT	FET_Driver.SchDoc
SIZE	B	MODIFIED	2023-05-16 2:10:37 PM
		SHEET	4 / 8

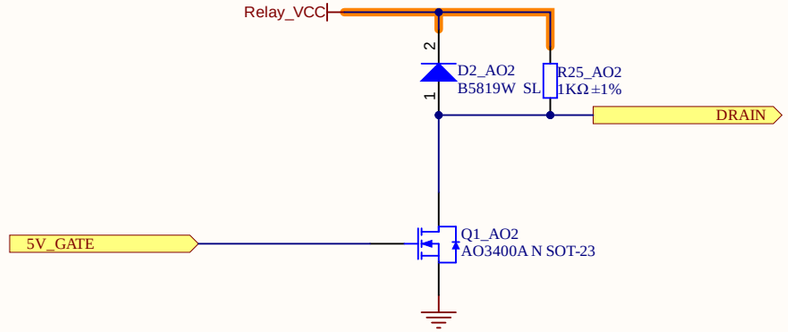

Copyright Expatria Technologies 2023. This document describes Open Hardware and is licensed under the CERN-OHL-S v2. No warranty is implied or expressed.

Expatria Technologies
1136 Glade Court
Port Coquitlam, BC V3B 1R5

EMAIL: INFO@EXPATRIA.CA

SHEET	FET Driver		
PROJECT	RP_UNO_CNC.PrjPCB	REV	A4
ENGR	AM	DOCUMENT	FET_Driver.SchDoc
SIZE	B	MODIFIED	2023-05-16 2:10:37 PM
		SHEET	4 / 8

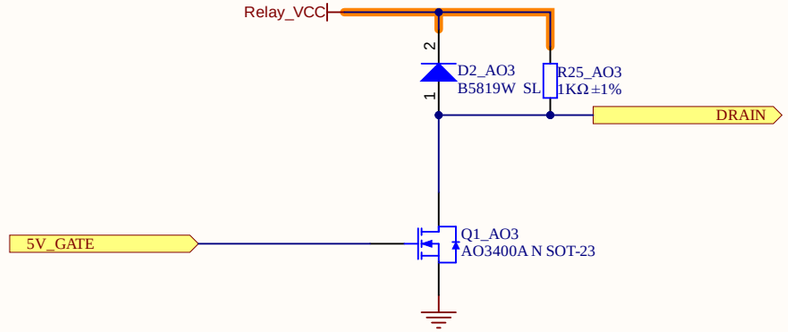

Copyright Expatria Technologies 2023. This document describes Open Hardware and is licensed under the CERN-OHL-S v2. No warranty is implied or expressed.

Expatria Technologies
1136 Glade Court
Port Coquitlam, BC V3B 1R5

EMAIL: INFO@EXPATRIA.CA

SHEET	FET Driver
PROJECT	RP_UNO_CNC.PrjPCB
REV	A4
ENGR	AM
DOCUMENT	FET_Driver.SchDoc
SIZE	B
MODIFIED	2023-05-16 2:10:37 PM
SHEET	4 / 8

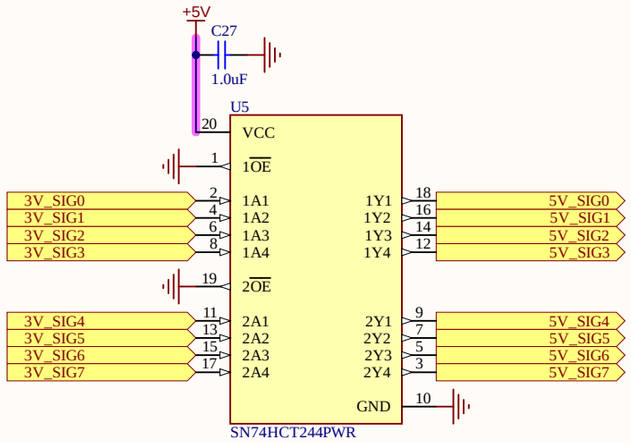

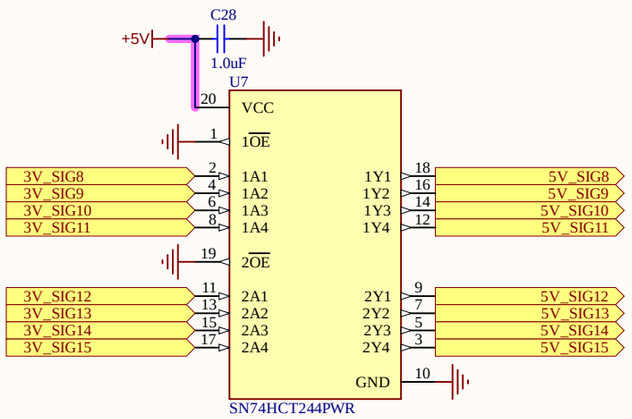

Copyright Expatria Technologies 2023. This document describes Open Hardware and is licensed under the CERN-OHL-S v2. No warranty is implied or expressed.

Expatria Technologies
1136 Glade Court
Port Coquitlam, BC V3B 1R5

EMAIL: INFO@EXPATRIA.CA

SHEET	5V shift
PROJECT	RP_UNO_CNC.PrjPCB
REV	A4
ENGR	AM
DOCUMENT	5V_Outputs.SchDoc
SIZE	B
MODIFIED	2023-05-16 2:10:37 PM
SHEET	5 / 8

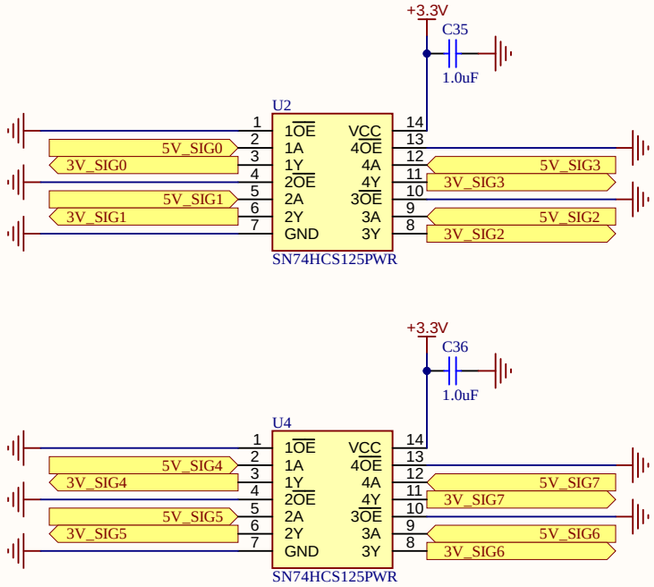

Copyright Expatria Technologies 2023. This document describes Open Hardware and is licensed under the CERN-OHL-S v2. No warranty is implied or expressed.

Expatria Technologies
1136 Glade Court
Port Coquitlam, BC V3B 1R5

EMAIL: INFO@EXPATRIA.CA

SHEET	5V Input Shift	
PROJECT	RP_UNO_CNC.PrjPCB	REV A4
ENGR AM	DOCUMENT 5V_Inputs.SchDoc	
SIZE B	MODIFIED 2023-05-16 2:10:37 PM	SHEET 6 / 8

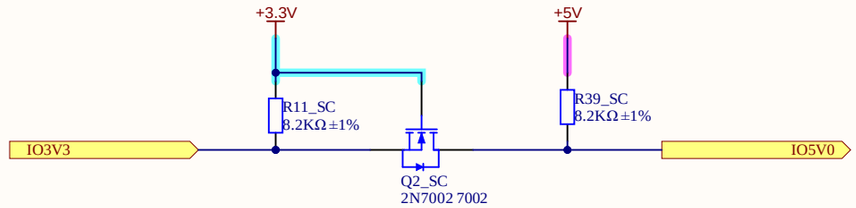

Copyright Expatria Technologies 2023. This document describes Open Hardware and is licensed under the CERN-OHL-S v2. No warranty is implied or expressed.

Expatria Technologies
1136 Glade Court
Port Coquitlam, BC V3B 1R5

EMAIL: INFO@EXPATRIA.CA

SHEET	FET Driver
PROJECT	RP_UNO_CNC.PrjPCB
REV	A4
ENGR	AM
DOCUMENT	FET_Converter.SchDoc
SIZE	B
MODIFIED	2023-05-16 2:10:37 PM
SHEET	7 / 8

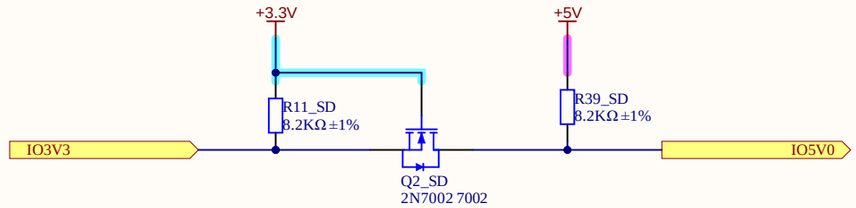

Copyright Expatria Technologies 2023. This document describes Open Hardware and is licensed under the CERN-OHL-S v2. No warranty is implied or expressed.

Expatria Technologies
1136 Glade Court
Port Coquitlam, BC V3B 1R5

EMAIL: INFO@EXPATRIA.CA

SHEET	FET Driver		
PROJECT	RP_UNO_CNC.PrjPCB	REV	A4
ENGR	AM	DOCUMENT	FET_Converter.SchDoc
SIZE	B	MODIFIED	2023-05-16 2:10:37 PM
		SHEET	7 / 8

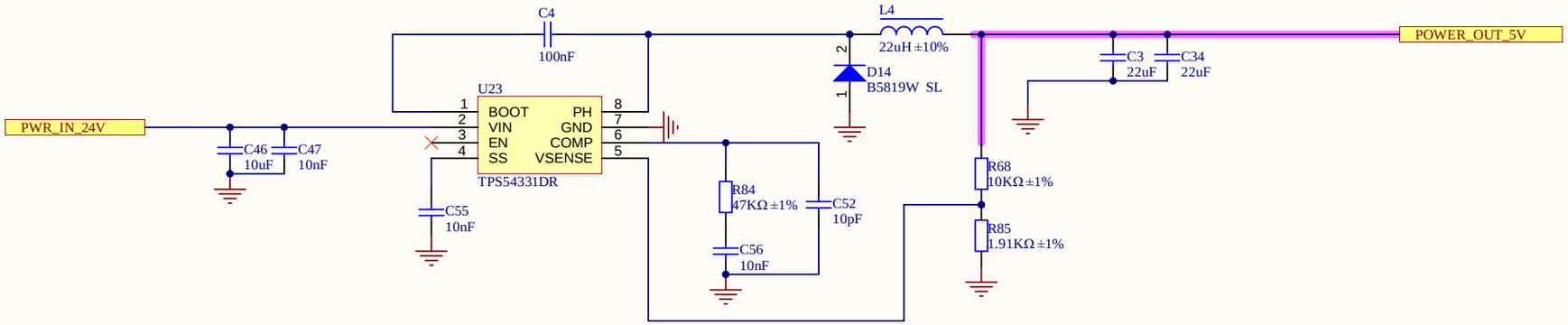

Copyright Expatria Technologies 2023. This document describes Open Hardware and is licensed under the CERN-OHL-S v2. No warranty is implied or expressed.

Expatria Technologies
1136 Glade Court
Port Coquitlam, BC V3B 1R5
EMAIL: INFO@EXPATRIA.CA

SHEET	5V Power Supply
PROJECT	RP_UNO_CNC.PrjPCB
REV	A4
ENGR	AM
DOCUMENT	5V_Power_Supply.SchDoc
SIZE	B
MODIFIED	2023-05-16 2:10:37 PM
SHEET	8 / 8

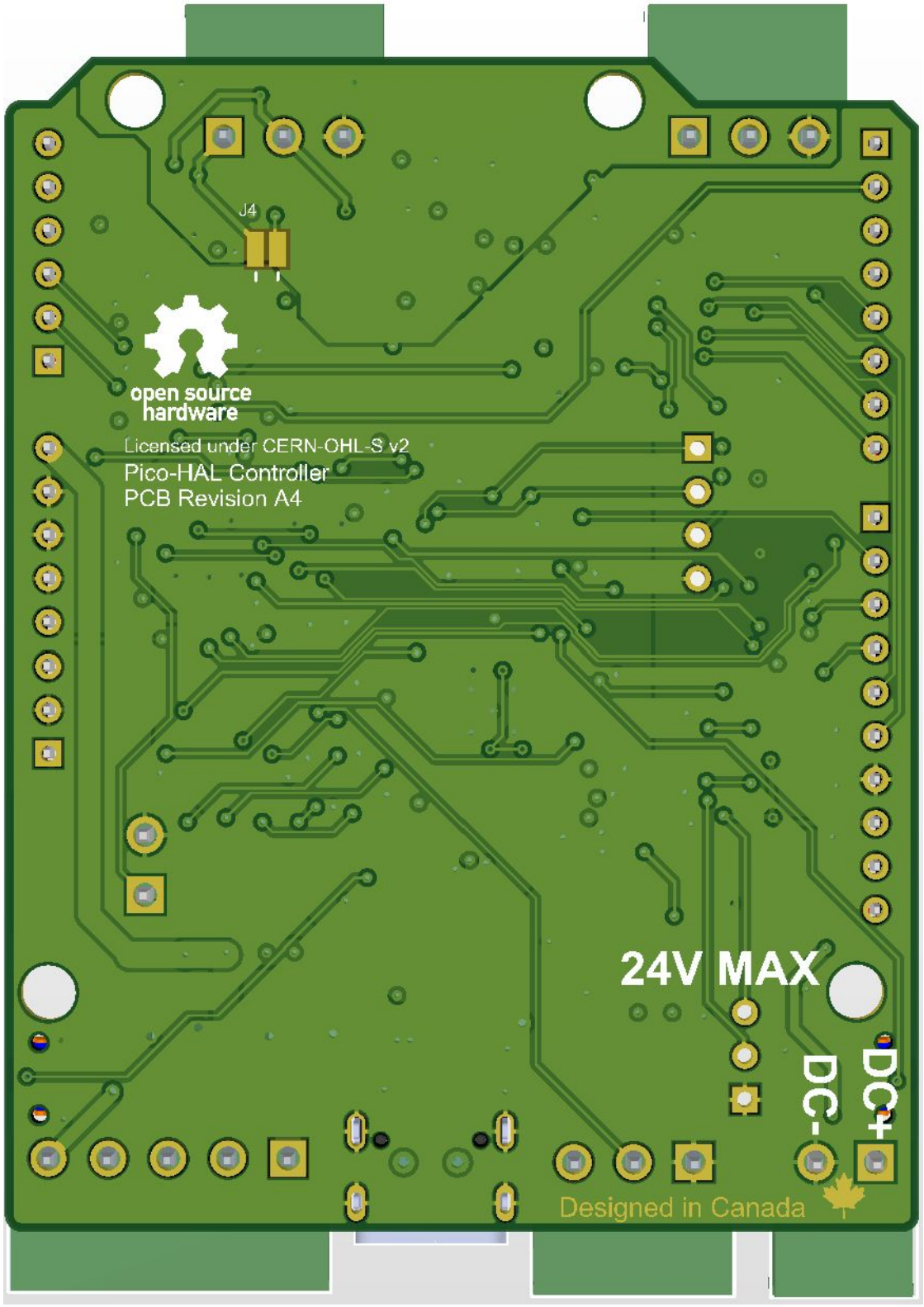
J4
open source
hardware
Licensed under CERN-OHL-S v2
Pico-HAL Controller
PCB Revision A4
24V MAX
DC-
DC+
Designed in Canada

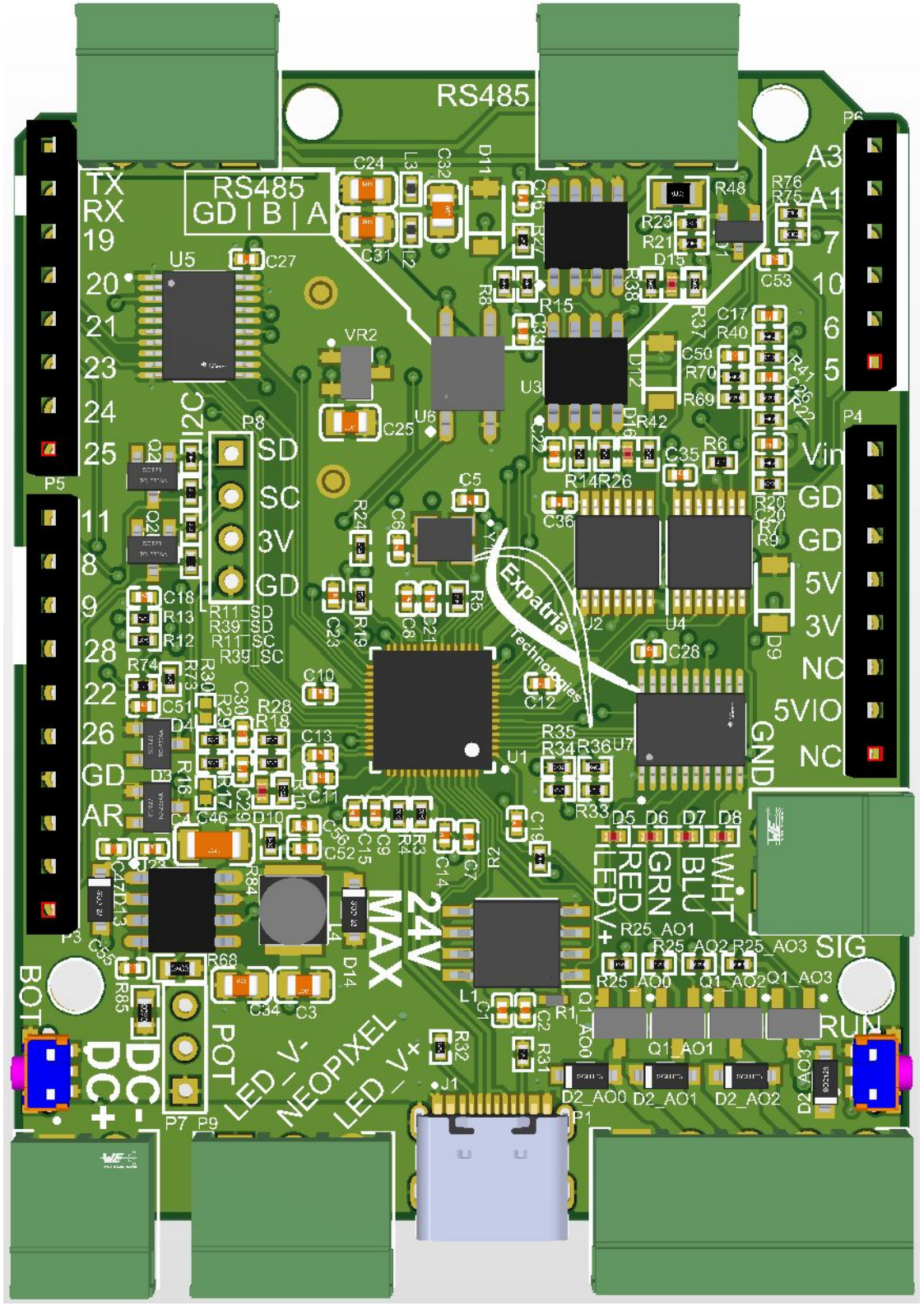
RS485
RS485
GD | B | A
TX
RX
19
20
21
23
24
25
11
8
9
28
22
26
GD
AR
P5
P6
A3
A1
7
10
6
5
P4
Vin
GD
GD
5V
3V
NC
5VIO
NC
GND
SIG
RUN
BOT
DC-
DC+
POT
LED_V-
NEOPIXEL
LED_V+
24V
MAX
LEDV+
RED
GRN
BLU
WHT
I2C
SD
SC
3V
GD
Expatria
Technologies
U1
U2
U3
U4
U5
U6
U7
VR2
P1
P3
P7
P8
P9
J1
L1
L2
L3
L4
D5
D6
D7
D8
D9
D10
D11
D12
D13
D14
D15
D16
D2_AO0
D2_AO1
D2_AO2
D2_AO3
R25_AO1
R25_AO2
R25_AO3
R25_AO0
Q1_AO1
Q1_AO2
Q1_AO3
Q1_AO0