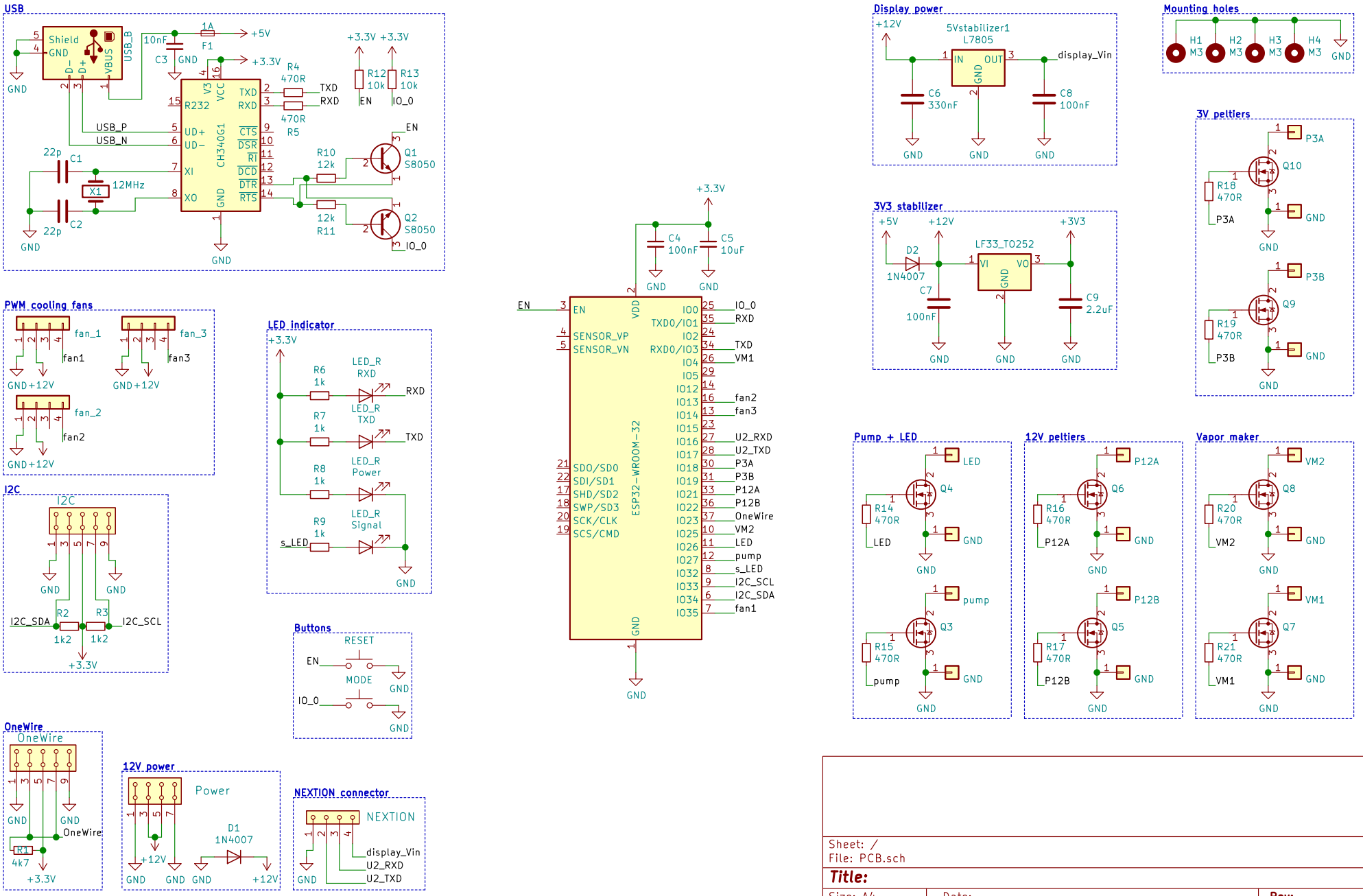


Sheet: /
File: PCB.sch

**Title:**

| Size: A4 | Date: | Rev: |
|---|---|---|
| KiCad E.D.A. kicad 5.1.5-52549c584ubuntu18.04.1 | | Id: 1/1 |