Extensible Homebrew Computer System Architecture Specification

Minsu Kwon (kms1212)

License Information

All files in this repository excluding documents which specifies any other license in its header or "LICENSE" file of its parent directory follow BSD license, except for the that the font data of documentations using template which is used in this documentation: The contents of this repository do not warrant its proper operation, and does not warrant its correct documentation. Reading this document, it is recommended to check its desired operation from code or binary files on your own.

Trademarks

- IBM-PC is a registered trademark of International Business Corporation.
- Macintosh is a trademark of Apple Inc.
- UNIX is a registered trademark of AT&T.
- FLEX, MAX, and Altera is a registered trademark of Altera Corp. acquired by Intel Corp.
- AVR is a registered trademark of Atmel Corp. acquired by Microchip Technology Inc.

BSD 3-Clause "New" or "Revised" License
Copyright 2024 Minsu Kwon
Redistribution and use in source and binary forms, with or without modification, are permitted provided that the following conditions are met:

1. Redistributions of source code must retain the above copyright notice, this list of conditions and the following disclaimer.
2. Redistributions in binary form must reproduce the above copyright notice, this list of conditions and the following disclaimer in the documentation and/or other materials provided with the distribution.
3. Neither the name of the copyright holder nor the names of its contributors may be used to endorse or promote products derived from this software without specific prior written permission.

THIS SOFTWARE IS PROVIDED BY THE COPYRIGHT HOLDERS AND CONTRIBUTORS "AS IS" AND ANY EXPRESS OR IMPLIED WARRANTIES, INCLUDING, BUT NOT LIMITED TO, THE IMPLIED WARRANTIES OF MERCHANTABILITY AND FITNESS FOR A PARTICULAR PURPOSE ARE DISCLAIMED. IN NO EVENT SHALL THE COPYRIGHT HOLDER OR CONTRIBUTORS BE LIABLE FOR ANY DIRECT, INDIRECT, INCIDENTAL, SPECIAL, EXEMPLARY, OR CONSEQUENTIAL DAMAGES (INCLUDING, BUT NOT LIMITED TO, PROCUREMENT OF SUBSTITUTE GOODS OR SERVICES; LOSS OF USE, DATA, OR PROFITS; OR BUSINESS INTERRUPTION) HOWEVER CAUSED AND ON ANY THEORY OF LIABILITY, WHETHER IN CONTRACT, STRICT LIABILITY, OR TORT (INCLUDING NEGLIGENCE OR OTHERWISE) ARISING IN ANY WAY OUT OF THE USE OF THIS SOFTWARE, EVEN IF ADVISED OF THE POSSIBILITY OF SUCH DAMAGE.

Preface

This document is detailed system manual of the homebrew computer powered by Motorola MC68030 Microprocessor. Its coverage is from low-level hardware structures and electrical characteristics to firmware operation calls to create your own bootloader and operating system or port existing applications or operating systems to this architecture.
Due to the educational purpose of this system architecture, you can freely create, modify, and delete any contents of it without almost every limitation. To read detailed information, see the license text inside of a box in the previous page.

Contacts

You can visit https://github.com/kms1212/68k30-hbc to create an issue to this repository.

Related Documents & References

More detailed informations of each components/standard used in this architecture may be needed to comprehend their operation, referencing documents in following table is recommended.

Title	Contents
MC68030 User's Manual	Detailed description of MC68030 Microprocessor
MC68882 User's Manual	Detailed description of MC68882 Floating-point coprocessor
FLEX® 6000 PLD Family Datasheet	Electrical characteristics, device architecture, timing parameters, etc. of Altera® FLEX® 6000 FPGA Family
MAX® 7000 PLD Family Datasheet	Electrical characteristics, device architecture, ISP programming methods, timing parameters, etc. of Altera® MAX® 7000 CPLD Family
Altera® Configuration Handbook	Configuration methods for Altera® FPGA Families.
JEDEC Standard No.21-C Page 4.4.2	Description of JEDEC 72-pin SIMM Memory module standard.
EHBC Software Development Supplement Manual	Considerations and detailed information regarding software (Bootloader, OS, or Application) development (TBD)
EHBC System Bus Controller Operation Datasheet	Detailed description of operation principle of the SBC implemented on FPGA (TBD)
EHBC Cached DRAM Controller Operation Datasheet	Detailed description of operation principle of the CDC implemented on FPGA (TBD)
TBD	

Notational Conventions

The following tables of notational conventions affects all descriptions throughout this document.

Term or Convention	Description
0x*value*	Hexadecimal value. Every Alphabets in the number should be uppercase.
0b*value*	Binary value. Any characters except 0 and 1 within *value* are not allowed.
"*value*"	String value
[*item1*, *item2*, *item3*, . . .]	List of values
{ *address* }	Address value. A binary, decimal, or hexadecimal values are allowed inside braces.
#{ *address* }	Referenced Value of Address *address*
value(*bit*)	A value of data where the *bit*th position of *value* counted from LSB. Multiple bits are selectable to specify the range using the term described below.
<*start*:*end*>	Range of indexes. The value of *start* should be greater than the value of *end*.
{ *enum1* | *enum2* | *enum3* | . . . }	A value of data where the *bit*th position of *value* counted from LSB. Multiple bits are selectable to specify the range using the term described below.
Boldface Text	Indicates that the text is critical to the contents of the context. It also indicates that the text is locally defined vocabulary.
Italic Text	Indicates that the text can be replaced into corresponding value. Simply, it is a placeholder.
Boldface Italic Text	A reference to a chapter, section, table or image.
`Monospaced Text`	Indicates that the text is code example, filen ame, file path, or any value that needs to be aligned by monospaced font.
`Boldface Monospaced Text`	Similar as above, but the role of boldface text is added.

Contents

1 Overview **2**

1.1 Features 2

2 Processor & Coprocessor **4**

2.1 The Main Processor 4

2.2 The Coprocessor 4

3 Memory Subsystem **5**

3.1 System Memory Types 5

3.2 Memory Map 5

3.2.1 Supervisor Address Space 5

3.2.2 User Address Space 5

3.3 The Main Dynamic RAM Module 5

3.4 The Cache RAM Module 5

3.5 Memory-Mapped I/O 5

3.6 Direct Memory Access 5

4 System Controllers **6**

4.1 Cached DRAM Controller 6

4.2 System Bus Controller 6

4.3 System Master Controller 6

5 System Bus **7**

5.1 Local Bus 7

5.2 PEP Bus 7

5.3 ISA Bus 7

5.4 Parallel ATA Bus 7

6 Prepheral Expansion Port **8**

7 On-Board Peripherals **9**

8 External Peripherals **10**

9 Power Supply **11**

10 Debugging Interfaces **12**

11 Firmware **13**

12 System Initialization **14**

List of Figures

List of Tables

Chapter 1

Overview

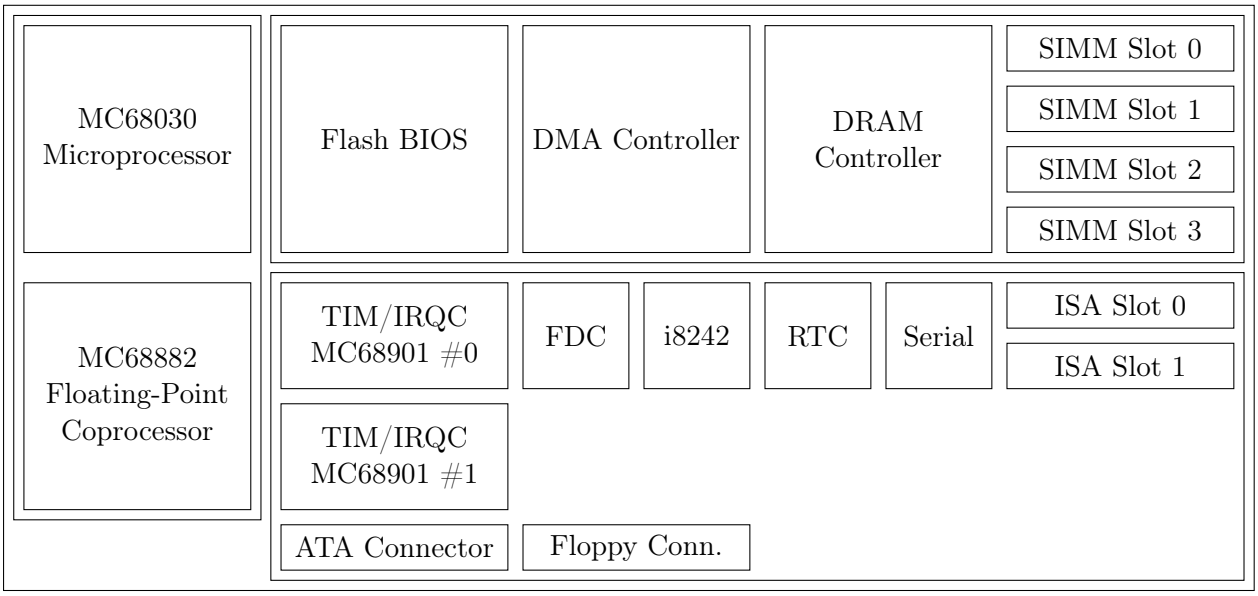

Contents in this chapter roughly explains about the entire architecture of the Extensible HomeBrew Computer. The architecture of this system is designed to provide flexible operations, rich system functions, and large expansion capabilities.

1.1 Features

The features and characteristics of the Extensible HomeBrew Computer (hereafter "030EHBC") are listed as follows:

1. Powered by a Motorola MC68030 microprocessor and a MC68882 coprocessor
   (a) 32-bit microprocessor up to 50 MHz of operation clock
   (b) Integrated 256-byte data cache and 256-byte instruction cache
   (c) Paged Memory-Management Unit (MMU) integrated for memory protection
   (d) 7 levels of interrupt autovector
   (e) A MC68882 floating-point coprocessor which accelerates real-number arithmetic is installable
2. Configurable processor frequency up to 50MHz and two fixed clocks at 24MHz and at 14.61818MHz
3. Four 72-pin SIMMs for DRAM capacity up to 64MiB
4. Cache support with the SRAM capacity up to 4MiB of data space and 512kiB of tag space.
5. The Cached DRAM Controller and the System Bus Controller implemented on FPGA:

(a) The Cached DRAM Controller, CDC is a DRAM controller with a cache support. It also works as a 8-channel DMA controller.
(b) The System Bus Controller, SBC is a multifunctional bus controller which supports PEP, ISA, OPB, and Parallel ATA.

6. Synchronous local bus transfer support by system controllers (CDC and SBC) in order to achieve fast operation cycles
7. 8 DMA channels with detailed signal customizations
8. Full support of IRQ signals driven by ISA bus devices
9. 4 programmable timers
10. Rich capabilities of peripheral buses and external devices:
    (a) Peripheral Expansion Port, PEP: 32-bit high-speed bus with multiplexed address and data
    (b) Industry Standard Architecture, ISA: 8-bit or 16-bit ISA bus for IBM PC compatibility
    (c) On-board Peripheral Bus, OPB: Simple 8-bit or 16-bit bus for integrated system peripherals
    (d) Parallel AT-Attachment, PATA: ACS-4 compatible 16-bit bus for storage devices
    (e) Inter-Integrated Circuit, I2C (IIC): Serial bus for system management and device recognization
    (f) Serial Peripheral Interface, SPI: Serial bus for NVSRAM connection
    (g) 1 floppy drive interface
    (h) 1 USB host interface
    (i) PS/2 keyboard and mouse interface
    (j) 1 RS232 serial port
    (k) 1 10Base-T 10Mbps ethernet port
    (l) Speaker/Microphone/Line-in audio jack
11. 5 expansion bus device connectors:
    (a) 3 sets of DIN-41612 3x32 and 3x10 connector for each PEP device
    (b) 2 sets of a 36-pin and 62-pin card-edge socket for each ISA device
12. Real-time clock and NVSRAM
13. Coin cell battery backup for a RTC and a NVSRAM
14. Two 4MiB flash memories storing firmware code and data
15. A dual-channel step-down buck converter providing adjustable voltage supplies to processors and system controllers.
16. A power monitor supervising voltage and current of each power supply rails
17. A System Master Controller implemented on ATMega32 controls switches, a buzzer, reset signals, etc.
18. A 24-pin ATX power supply connector for power inputs

Chapter 2

Processor & Coprocessor

2.1 The Main Processor

2.2 The Coprocessor

Chapter 3

Memory Subsystem

3.1 System Memory Types

3.2 Memory Map

3.2.1 Supervisor Address Space

3.2.2 User Address Space

3.3 The Main Dynamic RAM Module

3.4 The Cache RAM Module

3.5 Memory-Mapped I/O

3.6 Direct Memory Access

Chapter 4

System Controllers

4.1 Cached DRAM Controller

4.2 System Bus Controller

4.3 System Master Controller

Chapter 5

System Bus

5.1 Local Bus

5.2 PEP Bus

5.3 ISA Bus

5.4 Parallel ATA Bus

Chapter 6

Prepheral Expansion Port

Chapter 7

On-Board Peripherals

Chapter 8

External Peripherals

Chapter 9

Power Supply

Chapter 10

Debugging Interfaces

Chapter 11

Firmware

Chapter 12

System Initialization