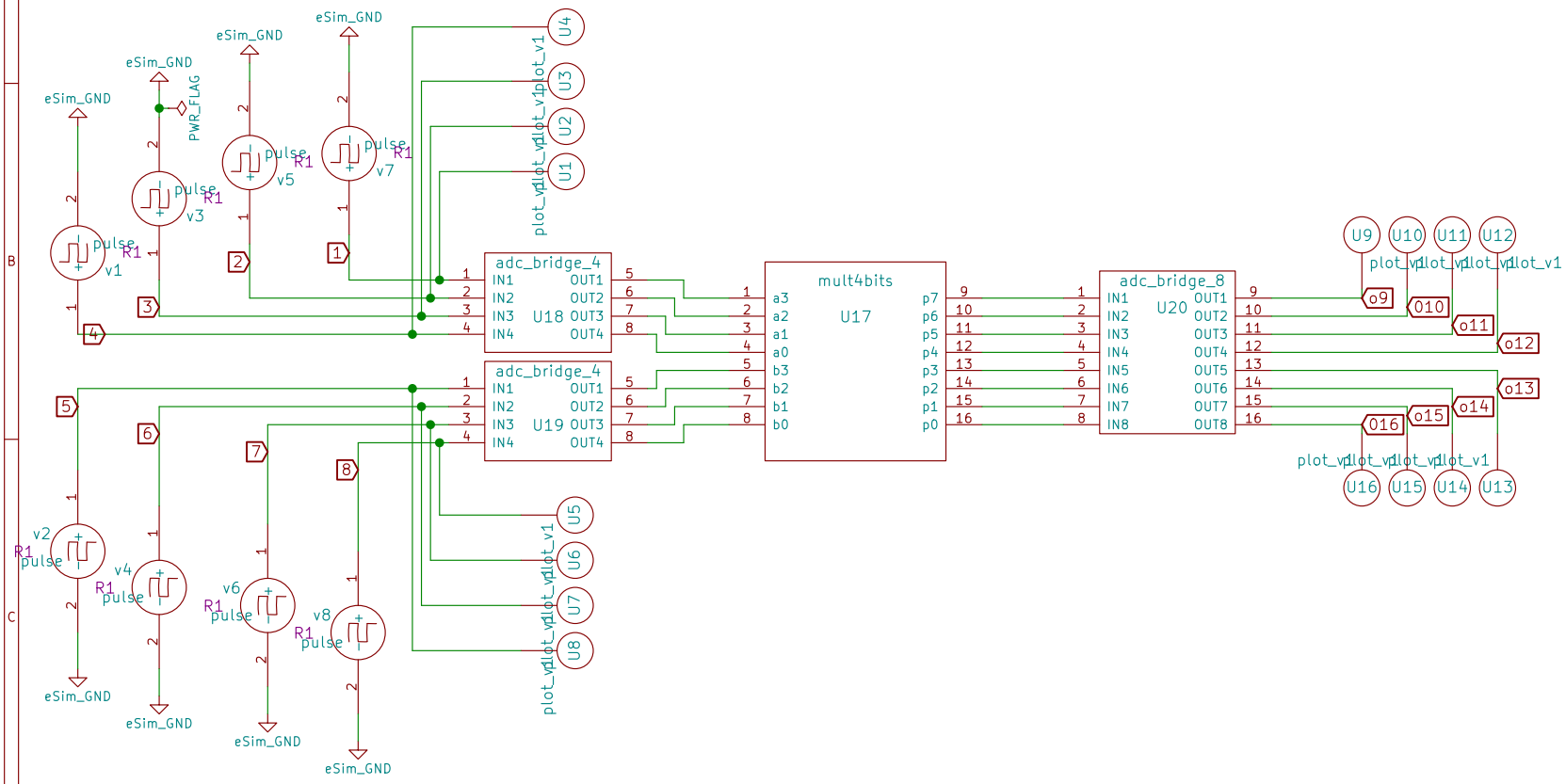

Sheet: /
File: mult4bits.sch

Title:

Size: A4	Date:	Rev:
KiCad E.D.A. eeschema 4.0.7		Id: 1/1