Design Methodology of a Multiplying DAC for a 10-bit, 100 MS/s Pipeline ADC in IHP 130 nm CMOS

Giorgis Ezequiel

March 29, 2026

Contents

1 Introduction **2**

2 System-Level Specifications and Derived MDAC Targets **2**
2.1 ADC specifications . . . 2
2.2 Derived amplifier requirements . . . 2
2.2.1 Gain . . . 2
2.2.2 Unity-Gain Bandwidth and Phase Margin . . . 3
2.2.3 Thermal Noise and Sampling Capcitor . . . 3
2.2.4 Requirements summary . . . 4
2.3 Corners definition . . . 4

3 Amplifier design **4**
3.1 Topology Selection . . . 4
3.2 Gain . . . 5
3.3 Gain enchancement . . . 5
3.4 Frequency response . . . 6
3.5 Bias Network . . . 7
3.6 Switched capacitor common mode feedback . . . 7
3.7 Boostraped Switch and Transmition Gates . . . 8
3.8 Complete Schematics . . . 9

4 Simulations results **9**
4.1 Open Loop . . . 9
4.2 Input common mode range . . . 9
4.3 Close Loop and FFT . . . 10

5 Conclusion **10**
5.1 Future work . . . 10

Abstract

This paper presents the complete design flow of a MDAC stage for a medium-resolution, high-speed pipeline ADC implemented in IHP 130 nm CMOS usign open source tools. The target converter operates at 1.5V, 100 MS/s with 10-bit resolution and 1V$_{pp}$ differential output swing, with robust operation across process, voltage, and temperature (PVT) corners. Starting from system-level requirements, we derive quantitative MDAC constraints on thermal noise, closed-loop settling, static gain accuracy, slew-rate, unity-gain bandwidth (UGBW), and phase margin for a given capacitive load.

1 Introduction

Pipeline Analog-to-Digital Converters (ADCs) are widely employed in modern high-speed, medium-to-high resolution applications due to their favorable trade-off between sampling rate, power efficiency, and achievable accuracy.

This type of ADCs chieve high throughput by distributing quantization across multiple stages, each composed of a sub-ADC, sub-DAC, residue amplifier, and sample-and-hold function. The MDAC is the central block in each stage because it both reconstructs the coarse quantization level and amplifies the residue for the next stage. For an ideal 1.5-bit/stage implementation, the residue transfer is

$$V_{res} = 2V_{in} - D \cdot V_{ref}, \tag{1}$$

where $D \in \{-1, 0, +1\}$ is the digital decision and the gain factor of 2 is realized by capacitor ratio and closed-loop OTA action.

2 System-Level Specifications and Derived MDAC Targets

2.1 ADC specifications

The intended converter targets are summarized in Table 1.

Table 1: Target system specifications

Parameter	**Target**
Architecture	Pipeline
Structure	Fully differential
Resolution	10 bits
Sampling rate f_s	100 MS/s
Output swing	1V$_{pp}$ differential
Load capacitance C_L	1.25 pF
Supply voltage V_{DD}	1.5 V
Common-mode level V_{CM}	0.75 V
Technology	IHP 130 nm CMOS

2.2 Derived amplifier requirements

2.2.1 Gain

For a closed-loop residue gain of 2, finite OTA gain A_0 introduces fractional gain error roughly

$$\varepsilon_g \approx \frac{1}{\beta A_0}, \tag{2}$$

where β is the feedback factor (typically near 0.5 in a gain-of-2 MDAC). Requiring residue gain error to be significantly below 0.5 LSB referred to full scale leads to

$$\varepsilon_g \lesssim \frac{1}{2^{N+1}} \quad \therefore \quad A_0 \gtrsim \frac{2^{N+1}}{\beta}. \tag{3}$$

For $N = 10$ and $\beta = 0.5$, this implies $A_0 \gtrsim 4096$ (≈ 72 dB). With digital calibration and redundancy, relaxed targets are possible; nevertheless 70–75 dB open-loop gain is a robust design objective.

2.2.2 Unity-Gain Bandwidth and Phase Margin

At 100 MS/s, the clock period is 10 ns. With two non-overlapping phases, available settling time in amplification phase is approximately

$$T_{\phi 2,eff} \approx 4\text{–}5 \text{ ns} \tag{4}$$

after subtracting switch dead-time and comparator latching overhead.

For first-order settling,

$$|\varepsilon_{dyn}| \approx e^{-t/\tau}, \qquad \tau \approx \frac{1}{2\pi\beta\,\mathrm{UGBW}}. \tag{5}$$

Imposing $\varepsilon_{dyn} < 1/2^{N+1}$ at $t = T_{\phi 2,eff}$ yields

$$\mathrm{UGBW} \gtrsim \frac{\ln(2^{N+1})}{2\pi\beta T_{\phi 2,eff}}. \tag{6}$$

For $N = 10$, $\beta = 0.5$, and $T_{\phi 2,eff} = 4.5$ ns, UGBW is around 540 MHz.

2.2.3 Thermal Noise and Sampling Capcitor

The thermal noise introduced by the sampling switch is shaped by the RC network formed by the switch resistance R and the sampling capacitor C_s, which behaves as a first-order low-pass filter with transfer function:

$$A(j\omega) = \frac{1}{1 + j\omega RC_s} \tag{7}$$

The total sampled noise is obtained by integrating the filtered noise power spectral density over frequency:

$$\overline{e_n^2} = \frac{1}{2\pi}\int_0^\infty \overline{e_R^2} \cdot |A(j\omega)|^2\, d\omega \tag{8}$$

Substituting the thermal noise of the resistor:

$$\overline{e_R^2} = 4kTR \tag{9}$$

$$\overline{e_n^2} = \frac{1}{2\pi}\int_0^\infty \frac{4kTR}{1 + (\omega RC_s)^2}\, d\omega \tag{10}$$

$$\overline{e_n^2} = \frac{1}{2\pi} \cdot \frac{4kTR}{RC_s} \cdot [\arctan(\omega RC_s)]_0^\infty = \frac{kT}{C_s} \tag{11}$$

Imposing the resolution constraint:

$$\sigma_n \leq \frac{LSB}{2}, \quad LSB = \frac{V_{FS}}{2^N} \Rightarrow C_s \geq \frac{kT}{(LSB/2)^2} \tag{12}$$

In practice:

$$C_s \approx \alpha \cdot \frac{kT}{(LSB/2)^2}, \quad \alpha \approx 3\text{–}10 \tag{13}$$

2.2.4 Requirements summary

Table 2: Target OTA specifications

Parameter	**Target**
Gain A_0	$\geq$ 70 dB
Unity-Gain Bandwidth UGBW	$\geq$ 540 MHz
Phase Marigin PM	$\geq 60°$
Output swing	1 V_{pp} diff.
ENOB	$\geq$ 9 bits
Sampling capacitors	$\approx$ 500 fF
Load capacitance C_L	1.25 pF
Supply voltage V_{DD}	1.5 V$\pm$5%
Common-mode level V_{CM}	0.7 V$\pm$5%
Bias current I_{ref}	50 μA$\pm$5%

2.3 Corners definition

To ensure the MDAC meets gain, settling, and stability targets under realistic spread, corner-based verification is grouped into three principal process conditions: slow-slow (SS), typical-typical (TT), and fast-fast (FF). Each process corner is evaluated together with coordinated perturbations of supply/common-mode voltages and OTA bias current, all with $\pm$5% variation around nominal values.

Table 3: Corner grouping with process and $\pm$5% bias/supply variations

Group	**Process corner**	VDD	V_{CM}	I_{bias}
SS group	SS	1.425 V	0.665 V	47.5 μA
TT group	TT	1.500 V	0.7 V	50.0 μA
FF group	FF	1.575 V	0.735 V	52.5 μA

3 Amplifier design

3.1 Topology Selection

A folded cascode OTA with PMOS input pair is selected to maximize input common-mode range and reduce flicker noise. The PMOS input devices allow operation with input voltages close to ground, which is suitable for switched-capacitor MDAC environments. The folded structure provides high gain while maintaining moderate voltage headroom under low supply conditions.

The signal path consists of a PMOS differential pair with transconductance g_{m1}, whose currents are folded into NMOS cascode devices, producing a high output resistance node.

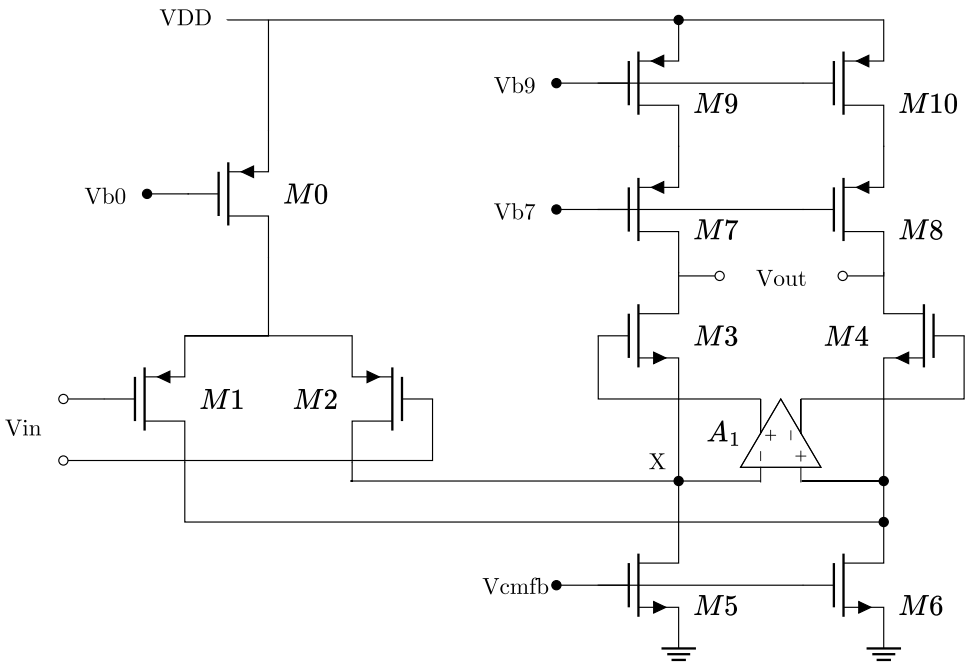

Figure 1: Main folded cascode amplifier

3.2 Gain

For a folded-cascode stage, low-frequency gain can be approximated as

$$A_0 \approx g_{m1} R_{out}, \tag{14}$$

where R_{out} is the small-signal resistance at the output node. With cascoding,

$$R_{out} \approx (g_{m7,8} r_{O7,8} r_{O9,10}) \parallel [g_{m3,4} r_{O3,4} (r_{O5,6} \parallel r_{O1,2})] \,. \tag{15}$$

Hence, gain is increased primarily by: (i) maximizing g_{m1}, and (ii) increasing r_O through longer channel devices.

3.3 Gain enchancement

To meet gain under 130 nm intrinsic gain limits, gain enhancement (gain-boosting) is applied to NMOS cascode transistors. If auxiliary amplifiers provide local gain A_1, then effective output resistance scales approximately as

$$R_{out,eff} \approx R_{out} \, (1 + A_1), \tag{16}$$

Practical implementation must preserve stability; therefore gain-boosting amplifier poles should be placed sufficiently above MDAC closed-loop bandwidth, or compensated to avoid excess phase lag near unity crossover.

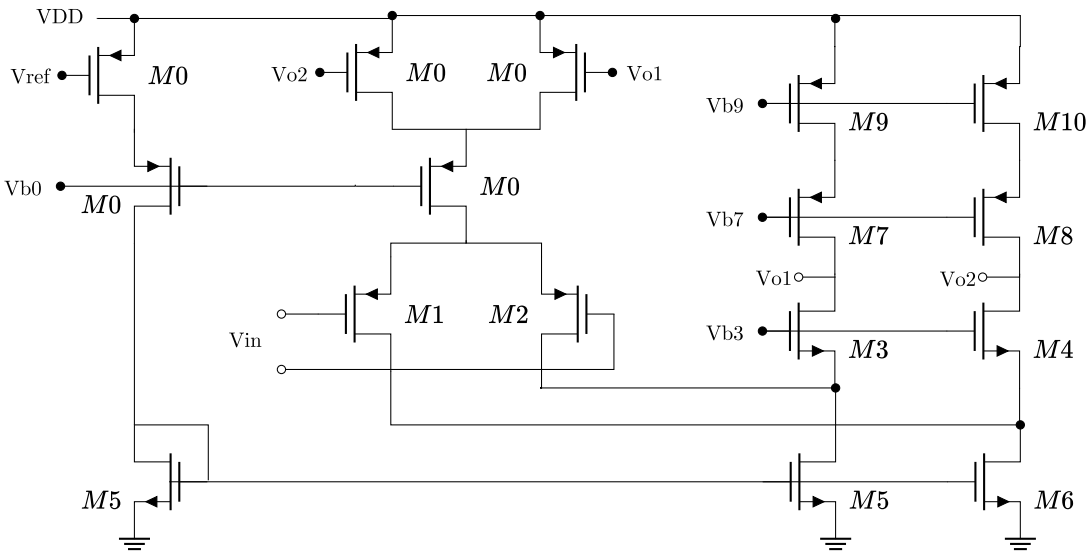

Figure 2: Auxiliary gain enchancement folded cascode amplifier

The auxiliary amplifier itself is implemented using a folded cascode topology, which provides high gain. Because the ouput swing is relative small, to stabilize its output common-mode voltage, a continuous-time common-mode feedback (CMFB) network based on MOS transistors operating in the triode region is employed. These devices act as voltage-controlled resistors, setting the output common-mode level without introducing significant additional poles.

3.4 Frequency response

The frequency response of the folded cascode OTA is analyzed using the node-pole association method, which allows identifying the dominant poles by associating each high-impedance node with its corresponding resistance and capacitance. Neglecting gain boosting effects, the response is dominated by three main nodes: the output node, the internal folding node X, and the input node.

The dominant pole is typically located at the output due to the large load capacitance C_L and high output resistance R_{out}:

$$\omega_{p,out} \approx \frac{1}{R_{out}C_L} \tag{17}$$

The internal node X, corresponding to the folded branch (drain of the input pair and source of the cascode devices), introduces a non-dominant pole given by:

$$\omega_{p,X} \approx \frac{1}{R_X C_X} \tag{18}$$

with:

$$R_X \approx \frac{1}{g_{m3,4}}, \quad C_X \approx C_{gs3,4} + C_{sb3,4} + 2C_{gd5,6} + C_{db5,6} \tag{19}$$

Stability requires sufficient separation between $\omega_{p,out}$ and the higher-frequency poles at node X and the input, indicating the need of a high $g_{m3,4}$ to ensure a phase margin greater than 60°.

At the input, the pole is defined by the source resistance and the total input capacitance:

$$\omega_{p,in} \approx \frac{1}{R_{in}C_{in}} \tag{20}$$

where:

$$C_{in} \approx C_{gs1} + C_{gd1}(1 + A_v) \tag{21}$$

The Miller multiplication of C_{gd1} can significantly increase the effective input capacitance, although in switched-capacitor applications this effect is partially mitigated by the sampling network.

Overall, the unity-gain bandwidth is primarily determined by:

$$UGBW \approx \frac{g_{m1,2}}{C_L} \tag{22}$$

To reach a UGBW of 540 MHz for a load of $C_L = 1.25$ pF, the $g_{m1,2}$ will be

$$g_{m1,2} = 2\pi 540\,\text{MHz} \times 1.25\,\text{pF} = 4.2\,\text{mS} \tag{23}$$

Considering a $g_m/I_D = 15$

$$I_{D_{M1,2}} = \frac{4.2\text{mS}}{15} \approx 280\,\mu\text{A} \therefore I_{D_{M0}} \approx 560\mu\text{ A} \tag{24}$$

3.5 Bias Network

Within the bias network, a low-voltage (wide-swing) cascode current mirror is adopted to generate stable bias currents while preserving voltage headroom under the 1.5 V supply constraint. Conventional cascode mirrors are unsuitable in this context because they impose an excessive minimum output voltage, on the order of $(V_{GS0}-V_{TH})+(V_{GS1}-V_{TH})+V_{TH}$, thereby limiting the allowable signal swing in critical high-impedance nodes of the folded-cascode OTA. To overcome this limitation, the implemented topology enforces V_{DS} matching between reference and output devices ($V_{DS1} \approx V_{DS2}$), biasing both transistors at the edge of saturation ($V_{DS} \approx V_{GS} - V_{TH}$). This condition is achieved through a carefully generated cascode gate bias V_b, constrained within

$$V_{GS,\text{cas}} + (V_{GS,\text{ref}} - V_{TH,\text{ref}}) \leq V_b \leq V_{GS,\text{ref}} + V_{TH,\text{cas}}, \tag{25}$$

ensuring all devices remain in saturation while minimizing headroom consumption. As a result, the minimum required output voltage is reduced to approximately $2V_{D,\text{sat}}$,

3.6 Switched capacitor common mode feedback

The switched-capacitor common-mode feedback (SC-CMFB) circuit regulates the output common-mode voltage by periodically sensing and correcting it through charge redistribution. During phase ϕ_1, the sampling capacitors acquire the output common-mode level:

$$V_{CM,out} = \frac{V_{O1} + V_{O2}}{2} \tag{26}$$

In phase ϕ_2, the capacitors are reconnected to the reference common-mode voltage $V_{CM,ideal}$, generating an error proportional to:

$$\Delta V_{CM} = V_{CM,out} - V_{CM,ideal} \tag{27}$$

This error is transferred to the control node V_{CMFB}, which adjusts the OTA biasing (e.g., $M_{5,6}$ gate voltage), closing the feedback loop and forcing: $V_{CM,out} \rightarrow V_{CM,ideal}$

The switched-capacitor implementation ensures accurate common-mode sensing and is inherently compatible with discrete-time operation. Proper capacitor matching and non-overlapping clock phases are required to minimize offset, charge injection, and instability in the CMFB loop.

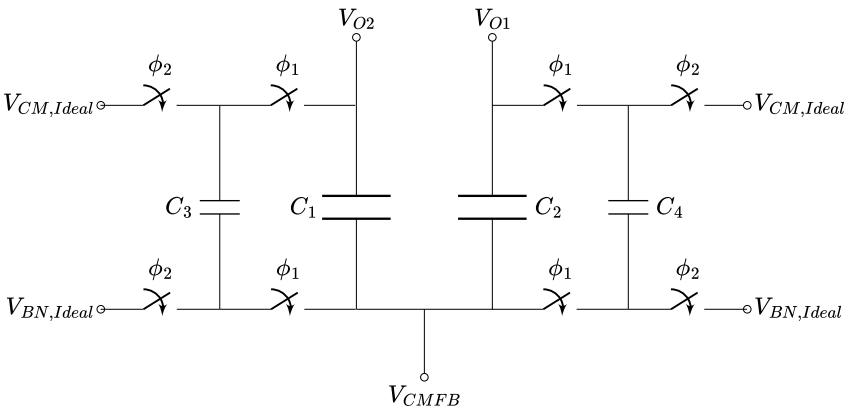

Figure 3: SC-CMFB circuit

3.7 Boostraped Switch and Transmition Gates

Switch linearity and switching noise are critical in SC-MDAC accuracy. Based on the provided bootstrap topology, two switch classes are used in this design: (i) bootstrapped NMOS switches for high-linearity signal sampling paths, and (ii) transmission gates in auxiliary/feedback paths where reduced charge-injection noise and robust rail-to-rail conduction are preferred.

In the bootstraped switches a capacitor is precharged (denoted C_B in the schematic) and, during the ON phase, drives the sampling-switch gate so that $V_{GS,switch} \approx V_{DD}$ and, therefore, approximately independent of input common-mode and instantaneous signal value. Consequently, the ON resistance

$$R_{on} \approx \frac{1}{\mu_n C_{ox}(W/L)(V_{GS} - V_{TH})} \tag{28}$$

becomes much less signal-dependent than with a simple NMOS gate drive. This strongly reduces harmonic distortion and gain error due to sampling-time RC variation.

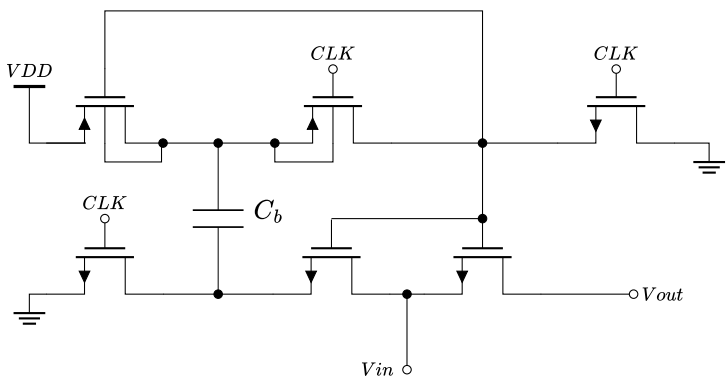

Figure 4: Boostraped switch circuit

A transmission gate (parallel NMOS+PMOS driven by complementary clocks) provides bidirectional conduction with lower effective charge-injection asymmetry than a single MOS switch. Its equivalent ON resistance is

$$R_{on,TG} \approx (R_{on,n} \parallel R_{on,p}). \tag{29}$$

In this design, transmission gates are intentionally used at nodes where the priority is to reduce switching-noise feedthrough and clock-induced disturbance rather than maximize absolute linearity; specifically, they are used in the CMFB switching network.

3.8 Complete Schematics

4 Simulations results

4.1 Open Loop

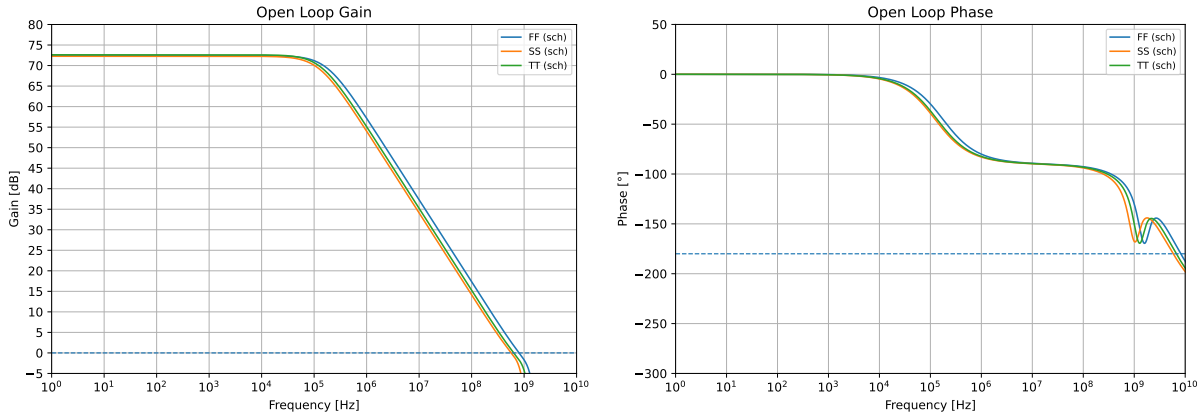

(a) (b)

Figure 5: Open loop AC performance of a) gain and b) phase

Table 4: Performance summary across corners

Metric	TT	SS	FF
Gain [dB]	74.63	–	–
UGBW [MHz]	64.30	–	–
PM [°]	-64.72	–	–

4.2 Input common mode range

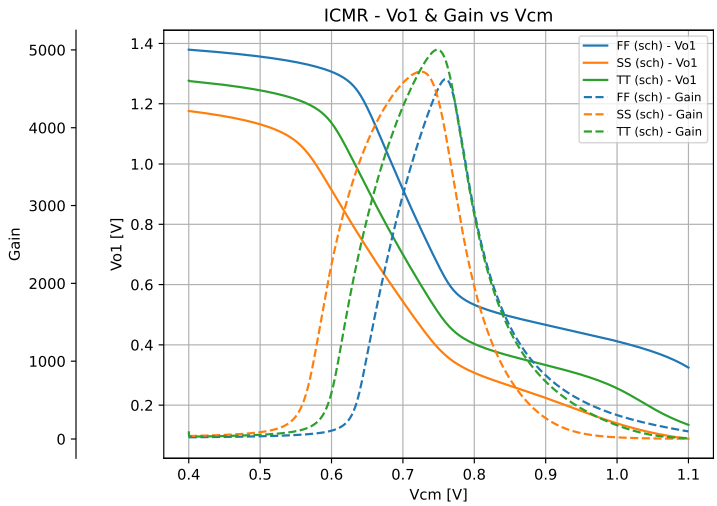

Figure 6

4.3 Close Loop and FFT

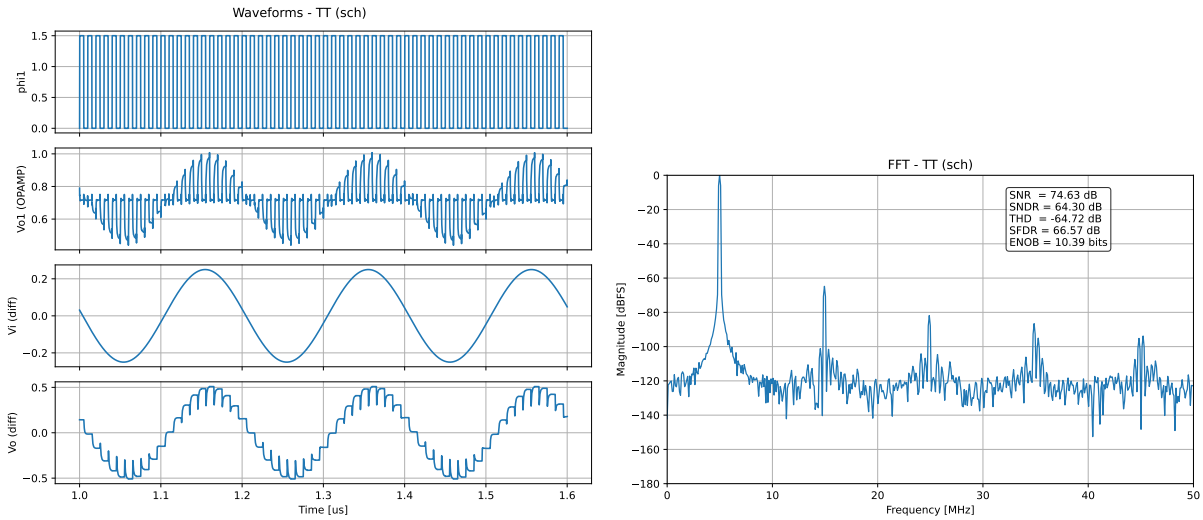

(a) (b)

Figure 7: Close loop TT performance in a) time domain and b) frequency domain

Table 5: Performance summary across corners

Metric	**TT**	**SS**	**FF**
SNR [dB]	74.63	–	–
SNDR [dB]	64.30	–	–
THD [dB]	-64.72	–	–
SFDR [dB]	66.57	–	–
ENOB [bits]	10.39	–	–

Table 6: Power consumption summary across corners

Metric	**TT**	**SS**	**FF**
VDD	74.63	–	–
I_{TOT} [mA]	64.30	–	–
Power [mW]	-64.72	–	–

5 Conclusion

5.1 Future work

The MDAC design presented here establishes the analog residue-amplification backbone of the pipeline stage. The next development steps for complete ADC realization focus on two key blocks:

(i) Comparator design. The following iteration should implement and verify a low-offset, high-speed dynamic comparator compatible with 100 MS/s operation and 1.5-bit/stage decision levels. Main tasks include kickback-noise mitigation toward the MDAC sampling nodes, metastability analysis under worst-case small-overdrive decisions, offset calibration strategy (if required), and robust operation across SS/TT/FF corners with ±5% supply variation.

(ii) Background digital calibration. A digital background engine should be added to continuously track and correct residue gain error, capacitor mismatch effects, and slow drift due to temperature/supply/process aging. The recommended path is to define an adaptive coefficient-estimation loop that runs during normal conversion (without foreground interruption), followed by fixed-point hardware mapping, convergence verification, and stability analysis of the analog-digital interaction loop.

At system level, future work should close the loop between these blocks and the current MDAC by means of full-stage and multi-stage behavioral/transistor co-simulation, so that static linearity, SNDR/ENOB, and calibration convergence can be validated simultaneously under PVT and Monte Carlo conditions.