Design Methodology of a Multiplying DAC for a 10-bit, 100 MS/s Pipeline ADC in IHP 130 nm CMOS

Giorgis Ezequiel

April 14, 2026

Contents

1 Introduction **2**

2 System-Level Specifications and Derived MDAC Targets **3**
2.1 ADC specifications . . . 3
2.2 Derived amplifier requirements . . . 3
2.2.1 Gain . . . 3
2.2.2 Unity-Gain Bandwidth and Phase Margin . . . 4
2.2.3 Thermal Noise and Sampling Capacitor . . . 4
2.2.4 Requirements summary . . . 5
2.3 Corners definition . . . 5

3 Amplifier design **5**
3.1 Topology Selection . . . 5
3.2 Gain . . . 6
3.3 Gain enhancement . . . 6
3.4 Frequency response . . . 7
3.5 Sizing . . . 8
3.6 Bias Network . . . 8
3.7 Switched capacitor common mode feedback . . . 9
3.8 Boostrapped Switch and Transmission Gates . . . 10

4 Simulations results **11**
4.1 Open Loop . . . 11
4.2 Close Loop and FFT . . . 12

5 Conclusion **13**

Abstract

This work presents the complete design flow of a MDAC stage for a 10 bits, 100 M/s ADC implemented in IHP 130 nm CMOS usign open source tools. The target converter operates at 1.5V, 100 MS/s with 10-bit resolution and $1V_{pp}$ differential output swing, with robust operation across process, voltage, and temperature (PVT) corners. Starting from system-level requirements, we derive quantitative MDAC constraints on thermal noise, closed-loop settling, static gain accuracy, slew-rate, unity-gain bandwidth (UGBW), and phase margin for a given capacitive load.

1 Introduction

Pipeline Analog-to-Digital Converters (ADCs) are in modern high-speed, medium-to-high resolution applications due to their favorable trade-off between sampling rate, power efficiency, and achievable accuracy.

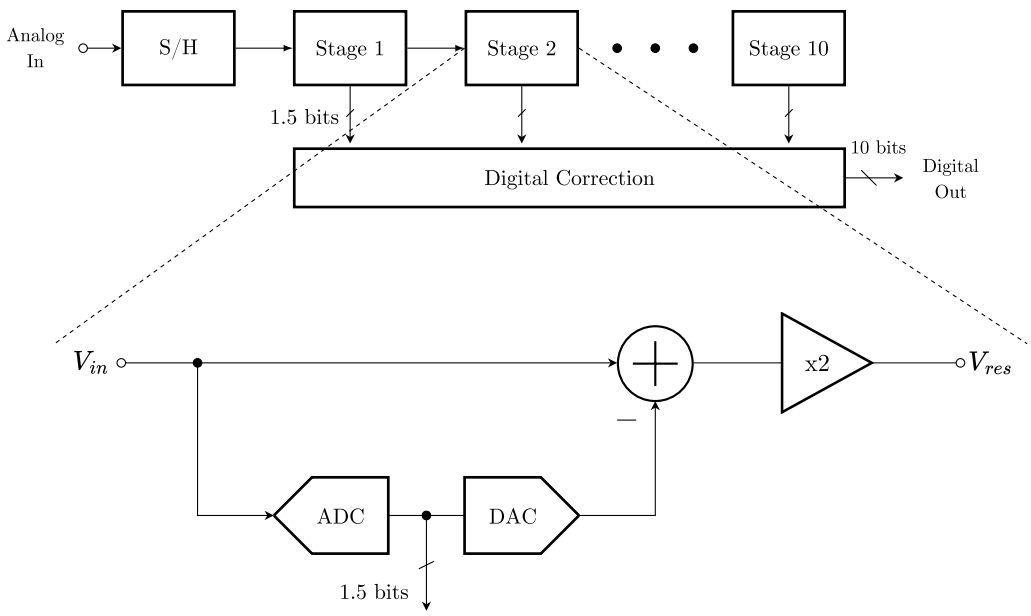

Figure 1: Block diagram of a ADC pipeline

As described in [1], this type of ADCs achieve high throughput by distributing quantization across multiple stages as shown in Fig. 1, each composed of a sub-ADC, sub-DAC, residue amplifier, and sample-and-hold function. The MDAC (Fig. 2) is the central block in each stage because it both reconstructs the coarse quantization level and amplifies the residue for the next stage. For an ideal 1.5-bit/stage implementation, the residue transfer is

$$V_{res} = 2V_{in} - D \cdot V_{ref}, \tag{1}$$

where $D \in \{-1, 0, +1\}$ is the digital decision and the gain factor of 2 is realized by capacitor ratio and closed-loop OTA action.

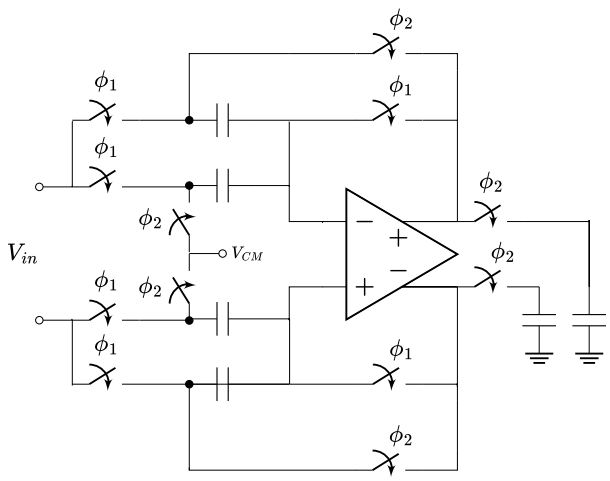

Figure 2: Flip around MDAC

2 System-Level Specifications and Derived MDAC Targets

2.1 ADC specifications

The intended converter parameters are summarized in Table 1, while operating conditions are outlined in Table 2.

Table 1: System specifications

Parameter	**Target**
Architecture	Pipeline
Structure	Fully differential
Resolution	10 bits
Sampling rate f_s	100 MS/s
Output swing	1V$_{pp}$ differential
Technology	IHP 130 nm CMOS

Table 2: System operating conditions

Condition	**Value**
Load capacitance C_L	1.25 pF
Supply voltage V_{DD}	1.5 V
Common-mode level V_{CM}	0.7 V
Operating temperature	$0°C$ to $125°C$

2.2 Derived amplifier requirements

2.2.1 Gain

For a closed-loop residue gain of 2, finite OTA gain A_0 introduces fractional gain error roughly

$$\varepsilon_g \approx \frac{1}{\beta A_0}, \tag{2}$$

where β is the feedback factor (typically near 0.5 in a gain-of-2 MDAC). Requiring residue gain error to be significantly below 0.5 LSB referred to full scale leads to

$$\varepsilon_g \lesssim \frac{1}{2^{N+1}} \quad \therefore \quad A_0 \gtrsim \frac{2^{N+1}}{\beta}. \tag{3}$$

For $N = 10$ and $\beta = 0.5$, this implies $A_0 \gtrsim 4096$ (≈ 72 dB). With digital calibration and redundancy, relaxed targets are possible; nevertheless 70–75 dB open-loop gain is a robust design objective.

2.2.2 Unity-Gain Bandwidth and Phase Margin

At 100 MS/s, the clock period is 10 ns. With two non-overlapping phases, available settling time in amplification phase is approximately

$$T_{\phi 2,eff} \approx 4\text{–}5 \text{ ns} \tag{4}$$

after subtracting switch dead-time and comparator latching overhead.

For first-order settling,

$$|\varepsilon_{dyn}| \approx e^{-t/\tau}, \qquad \tau \approx \frac{1}{2\pi\beta\,\mathrm{UGBW}}. \tag{5}$$

Imposing $\varepsilon_{dyn} < 1/2^{N+1}$ at $t = T_{\phi 2,eff}$ yields

$$\mathrm{UGBW} \gtrsim \frac{\ln(2^{N+1})}{2\pi\beta T_{\phi 2,eff}}. \tag{6}$$

For $N = 10$, $\beta = 0.5$, and $T_{\phi 2,eff} = 4.5$ ns, UGBW is around 540 MHz.

2.2.3 Thermal Noise and Sampling Capacitor

According to [2], the thermal noise introduced by the sampling switch is shaped by the RC network formed by the switch resistance R and the sampling capacitor C_s, which behaves as a first-order low-pass filter with transfer function:

$$A(j\omega) = \frac{1}{1 + j\omega RC_s} \tag{7}$$

The total sampled noise is obtained by integrating the filtered noise power spectral density over frequency:

$$\overline{e_n^2} = \frac{1}{2\pi}\int_0^\infty \overline{e_R^2} \cdot |A(j\omega)|^2\, d\omega \tag{8}$$

Substituting the thermal noise of the resistor:

$$\overline{e_R^2} = 4kTR \tag{9}$$

$$\overline{e_n^2} = \frac{1}{2\pi}\int_0^\infty \frac{4kTR}{1 + (\omega RC_s)^2}\, d\omega \tag{10}$$

$$\overline{e_n^2} = \frac{1}{2\pi} \cdot \frac{4kTR}{RC_s} \cdot [\arctan(\omega RC_s)]_0^\infty = \frac{kT}{C_s} \tag{11}$$

Imposing the resolution constraint:

$$\sigma_n \leq \frac{LSB}{2}, \quad LSB = \frac{V_{FS}}{2^N} \Rightarrow C_s \geq \frac{kT}{(LSB/2)^2} \tag{12}$$

In practice:

$$C_s \approx \alpha \cdot \frac{kT}{(LSB/2)^2}, \quad \alpha \approx 3\text{–}10 \tag{13}$$

2.2.4 Requirements summary

Table 3: Target OTA specifications

Parameter	**Target**
Gain A_0	$\geq$ 70 dB
Unity-Gain Bandwidth UGBW	$\geq$ 540 MHz
Phase Marigin PM	$\geq 60°$
Output swing	1 V_{pp} diff.
ENOB @ $f_{in} \approx f_s/20$	$\geq$ 9.5 bits
ENOB @ $f_{in} \approx f_s/2$	$\geq$ 8 bits
Sampling capacitors	$\approx$ 500 fF
Load capacitance C_L	1.25 pF
Supply voltage V_{DD}	1.5 V±5%
Common-mode level V_{CM}	0.7 V±5%
Bias current I_{ref}	50 μA±5%
Operating temperature	$0°C$ to $125°C$

2.3 Corners definition

To ensure the MDAC meets gain, settling, and stability targets under realistic spread, corner-based verification is grouped into three principal process conditions: slow-slow (SS), typical-typical (TT), and fast-fast (FF). Each process corner is evaluated together with coordinated perturbations of supply/common-mode voltages and OTA bias current, all with ±5% variation around nominal values.

Table 4: Corner grouping with process and ±5% bias/supply variations

Group	**Process corner**	VDD	V_{CM}	I_{bias}	Temperature
SS group	SS	1.425 V	0.665 V	47.5 μA	$125°C$
TT group	TT	1.500 V	0.7 V	50.0 μA	$65°C$
FF group	FF	1.575 V	0.735 V	52.5 μA	$0°C$

Future work will extend this approach to a full cartesian combination of these variables to ensure comprehensive coverage of all possible operating conditions.

3 Amplifier design

3.1 Topology Selection

A folded cascode OTA with PMOS input pair (Fig. 3) is selected to maximize input common-mode range and reduce flicker noise. The PMOS input devices allow operation with input voltages close to ground, which is suitable for switched-capacitor MDAC environments. The folded structure provides high gain while maintaining moderate voltage headroom under low supply conditions.

The signal path consists of a PMOS differential pair with transconductance g_{m1}, whose currents are folded into NMOS cascode devices, producing a high output resistance node.

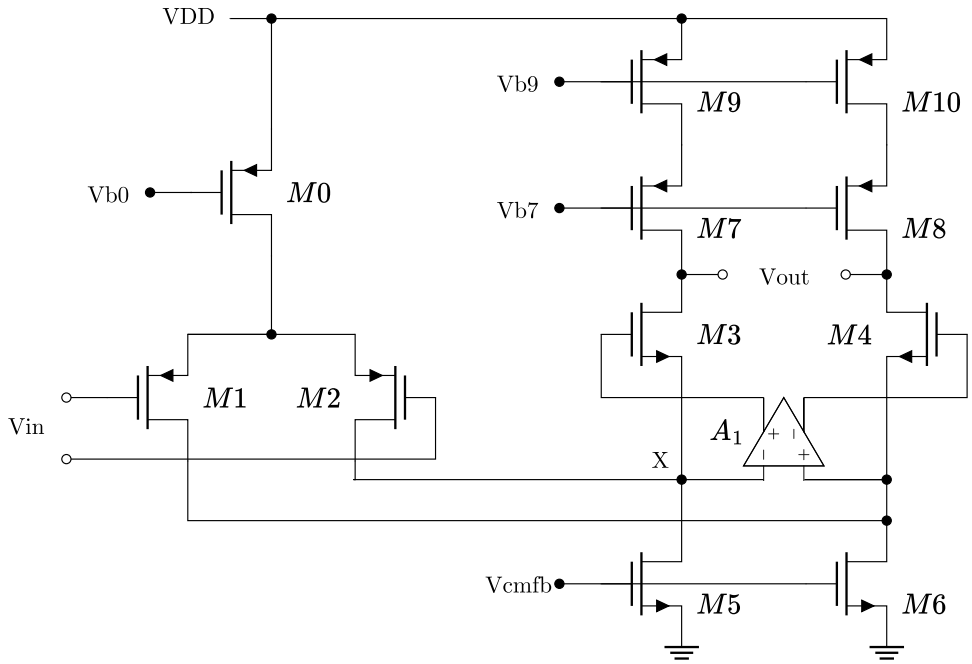

Figure 3: Main folded cascode amplifier

3.2 Gain

For a folded-cascode stage, low-frequency gain can be approximated as

$$A_0 \approx g_{m1} R_{out}, \tag{14}$$

where R_{out} is the small-signal resistance at the output node. With cascoding,

$$R_{out} \approx (g_{m7,8} r_{O7,8} r_{O9,10}) \parallel [g_{m3,4} r_{O3,4} (r_{O5,6} \parallel r_{O1,2})] \tag{15}$$

Hence, gain is increased primarily by: (i) maximizing g_{m1} — wich also increase bandwidth — and (ii) increasing r_O through longer channel devices.

3.3 Gain enhancement

To meet gain under 130 nm intrinsic gain limits, gain enhancement (gain-boosting) is applied to NMOS cascode transistors. If auxiliary amplifiers provide local gain A_1, then effective output resistance scales approximately as

$$R_{out,eff} \approx R_{out} (1 + A_1), \tag{16}$$

Practical implementation must preserve stability; therefore gain-boosting amplifier poles should be placed sufficiently above MDAC closed-loop bandwidth, or compensated to avoid excess phase lag near unity crossover.

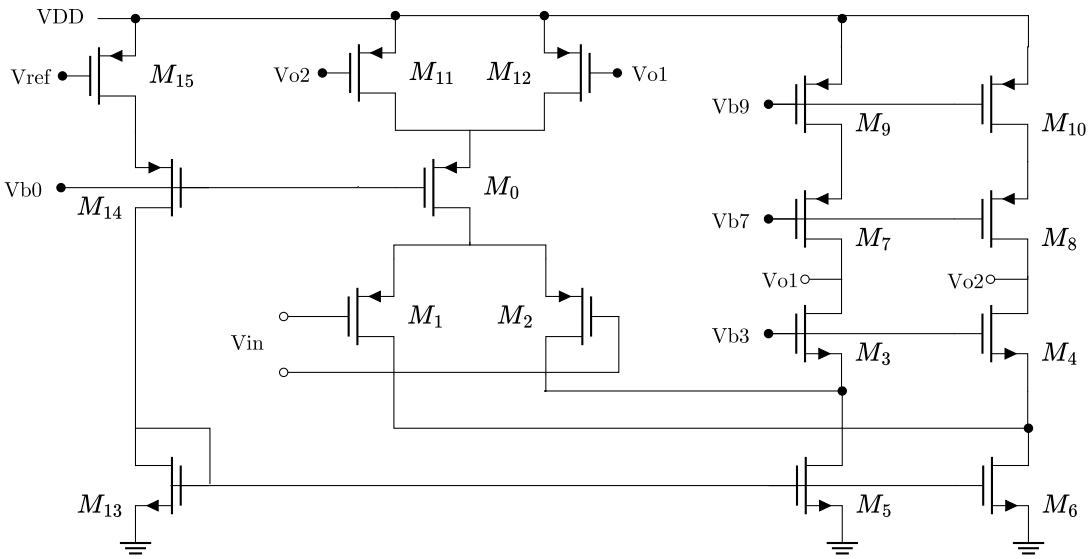

Figure 4: Auxiliary gain enchancement folded cascode amplifier

The auxiliary amplifier itself (Fig. 4) is implemented using a folded cascode topology, which provides high gain. Because the ouput swing is relative small, to stabilize its output common-mode voltage, a continuous-time common-mode feedback (CMFB) network based on MOS transistors operating in the triode region is employed. These devices act as voltage-controlled resistors, setting the output common-mode level without introducing significant additional poles.

3.4 Frequency response

The frequency response of the folded cascode OTA is analyzed using the node-pole association method, which allows identifying the dominant poles by associating each high-impedance node with its corresponding resistance and capacitance. Neglecting gain boosting effects, the response is dominated by three main nodes: the output node, the internal folding node X (noted in Fig. 3), and the input node.

The dominant pole is typically located at the output due to the large load capacitance C_L and high output resistance R_{out}:

$$\omega_{p,out} \approx \frac{1}{R_{out}C_L} \tag{17}$$

The internal node X, corresponding to the folded branch (drain of the input pair and source of the cascode devices), introduces a non-dominant pole given by:

$$\omega_{p,X} \approx \frac{1}{R_X C_X} \tag{18}$$

with:

$$R_X \approx \frac{1}{g_{m3,4}}, \quad C_X \approx C_{gs3,4} + C_{sb3,4} + 2C_{gd5,6} + C_{db5,6} \tag{19}$$

Stability requires sufficient separation between $\omega_{p,out}$ and the higher-frequency poles at node X and the input, indicating the need of a high $g_{m3,4}$ to ensure a phase margin greater than 60°.

At the input, the pole is defined by the source resistance and the total input capacitance:

$$\omega_{p,in} \approx \frac{1}{R_{in}C_{in}} \tag{20}$$

where:

$$C_{in} \approx C_{gs1} + C_{gd1}(1 + A_v) \tag{21}$$

The Miller multiplication of C_{gd1} can significantly increase the effective input capacitance, although in switched-capacitor applications this effect is partially mitigated by the sampling network.

Overall, the unity-gain bandwidth is primarily determined by:

$$UGBW \approx \frac{g_{m1,2}}{C_L} \tag{22}$$

To reach a UGBW of 540 MHz for a load of $C_L = 1.25$ pF, the $g_{m1,2}$ will be

$$g_{m1,2} = 2\pi 540\,\text{MHz} \times 1.25\,\text{pF} = 4.2\,\text{mS} \tag{23}$$

Considering a $g_m/I_D = 15$

$$I_{D_{M1,2}} = \frac{4.2\text{mS}}{15} \approx 280\,\mu\text{A} \therefore I_{D_{M0}} \approx 560\mu\text{ A} \tag{24}$$

3.5 Sizing

Table 5: Main folded cascode (Fig. 3) transistor sizing

Transistor	**W/L [μm]**	**Fingers**	**Multiplier**
M_0	113.5/0.3	210	8
M_1, M_2	115/0.13	100	2
M_3, M_4	44.4/0.3	22	6
M_5, M_6	24.3/0.8	62	6
M_7, M_8	100/0.4	150	4
M_9, M_{10}	63.2/0.8	103	4

Table 6: Auxiliary gain enchancement folded cascode (Fig. 4) transistor sizing

Transistor	**W/L [μm]**	**Fingers**	**Multiplier**
M_0, M_{14}	12/0.3	12	1
M_1, M_2	35/0.15	70	4
M_3, M_4	38.7/0.6	5	1
M_5, M_6	20.2/0.7	5	2
M_7, M_8	23.2/0.3	10	1
M_9, M_{10}	19.8/0.7	20	2
M_{11}, M_{12}, M_{15}	20/0.3	5	1
M_{13}	32/0.7	4	1

3.6 Bias Network

Within the bias network, a low-voltage (wide-swing) cascode current mirror (Fig. 5) is adopted to generate stable bias currents while preserving voltage headroom under the 1.5 V supply constraint. Conventional cascode mirrors are unsuitable in this context because they impose an excessive minimum output voltage, on the order of $(V_{GS0} - V_{TH}) + (V_{GS1} - V_{TH}) + V_{TH}$, thereby limiting the allowable signal swing in critical high-impedance nodes of the folded-cascode OTA. To overcome this limitation, the implemented topology enforces V_{DS} matching between

reference and output devices ($V_{DS1} \approx V_{DS2}$), biasing both transistors at the edge of saturation ($V_{DS} \approx V_{GS} - V_{TH}$). This condition is achieved through a carefully generated cascode gate bias $V_b = V_{GS3} + (V_{GS2} - V_{TH})$, ensuring all devices remain in saturation while minimizing headroom consumption. As a result, the minimum required output voltage is reduced to approximately $2V_{D,\text{sat}}$,

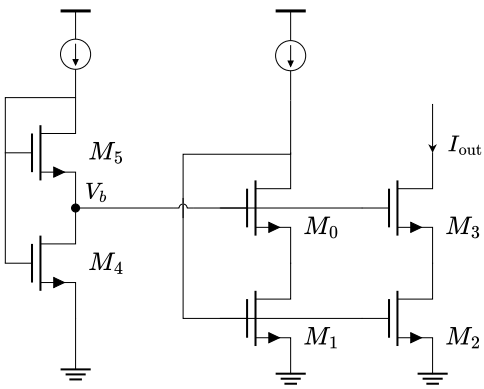

Figure 5: Bias network

3.7 Switched capacitor common mode feedback

The switched-capacitor common-mode feedback (SC-CMFB) circuit regulates the output common-mode voltage by periodically sensing and correcting it through charge redistribution (Fig. 6). During phase ϕ_1, the sampling capacitors acquire the output common-mode level:

$$V_{CM,out} = \frac{V_{O1} + V_{O2}}{2} \tag{25}$$

In phase ϕ_2, the capacitors are reconnected to the reference common-mode voltage $V_{CM,ideal}$, generating an error proportional to:

$$\Delta V_{CM} = V_{CM,out} - V_{CM,ideal} \tag{26}$$

This error is transferred to the control node V_{CMFB}, which adjusts the OTA biasing (e.g., $M_{5,6}$ gate voltage), closing the feedback loop and forcing: $V_{CM,out} \rightarrow V_{CM,ideal}$

The switched-capacitor implementation ensures accurate common-mode sensing and is inherently compatible with discrete-time operation. Proper capacitor matching and non-overlapping clock phases are required to minimize offset, charge injection, and instability in the CMFB loop.

All four capacitors of the SC-CFMB were implemented in MIM technology.

Table 7: SC-CMFB (Fig. 3) capacitor sizing

Capacitor	**W/L [μm]**	**Value [fF]**
C_1, C_2	10/10	151.6
C_3, C_4	4.5/4.5	31.1

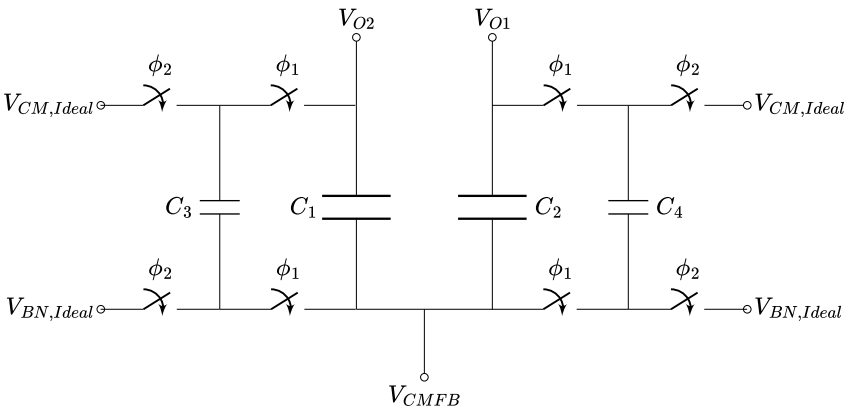

Figure 6: SC-CMFB circuit

3.8 Boostrapped Switch and Transmission Gates

Switch linearity and switching noise are critical in SC-MDAC accuracy. Based on the provided bootstrap topology, two switch classes are used in this design: (i) bootstrapped NMOS switches for high-linearity signal sampling paths (Fig. 7), and (ii) transmission gates in auxiliary/feedback paths where reduced charge-injection noise and robust rail-to-rail conduction are preferred.

In the bootstraped switches a capacitor is precharged (denoted C_B in the schematic) and, during the ON phase, drives the sampling-switch gate so that $V_{GS,switch} \approx V_{DD}$ and, therefore, approximately independent of input common-mode and instantaneous signal value. Consequently, the ON resistance

$$R_{on} \approx \frac{1}{\mu_n C_{ox}(W/L)(V_{GS} - V_{TH})} \tag{27}$$

becomes much less signal-dependent than with a simple NMOS gate drive. This strongly reduces harmonic distortion and gain error due to sampling-time RC variation. The design of this class of switches was carried out following the methodology described in [3]

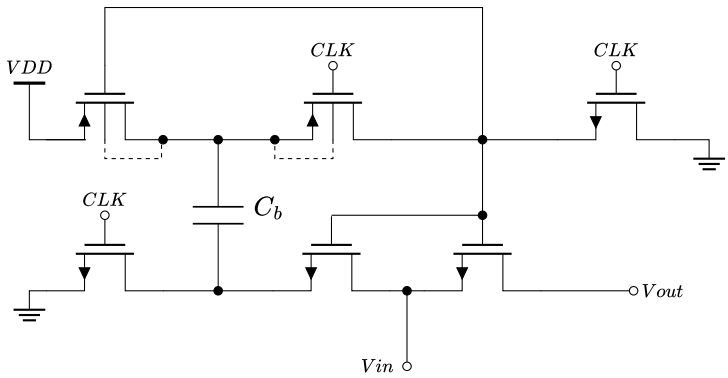

Figure 7: Boostrapped switch circuit

A transmission gate (parallel NMOS+PMOS driven by complementary clocks) provides bidirectional conduction with lower effective charge-injection asymmetry than a single MOS switch. Its equivalent ON resistance is

$$R_{on,TG} \approx (R_{on,n} \parallel R_{on,p}). \tag{28}$$

In this design, transmission gates are intentionally used at nodes where the priority is to reduce switching-noise feedthrough and clock-induced disturbance rather than maximize absolute linearity; specifically, they are used in the CMFB switching network.

4 Simulations results

4.1 Open Loop

The open-loop performance of the designed OTA is evaluated through a dedicated testbench (Fig. 8) consisting of an AC simulation. Because the SC-CMFB is not included here, the V_{CMFB} is manually set to a voltage that produce the desire $V_{\text{CM, out}}$. Others approaches may be considered in future work.

The results include gain and phase responses across the considered corners (Fig. 9) as well as measured values of interest in Table 8.

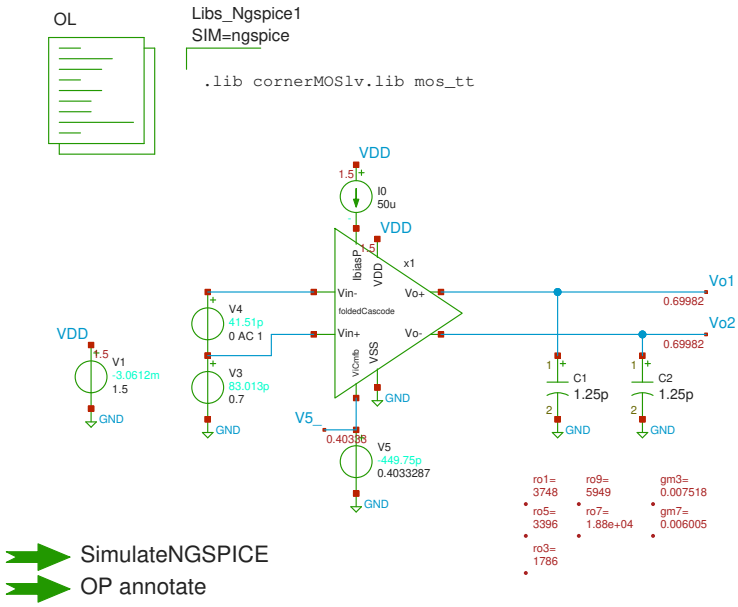

Figure 8: Open Loop Testbench

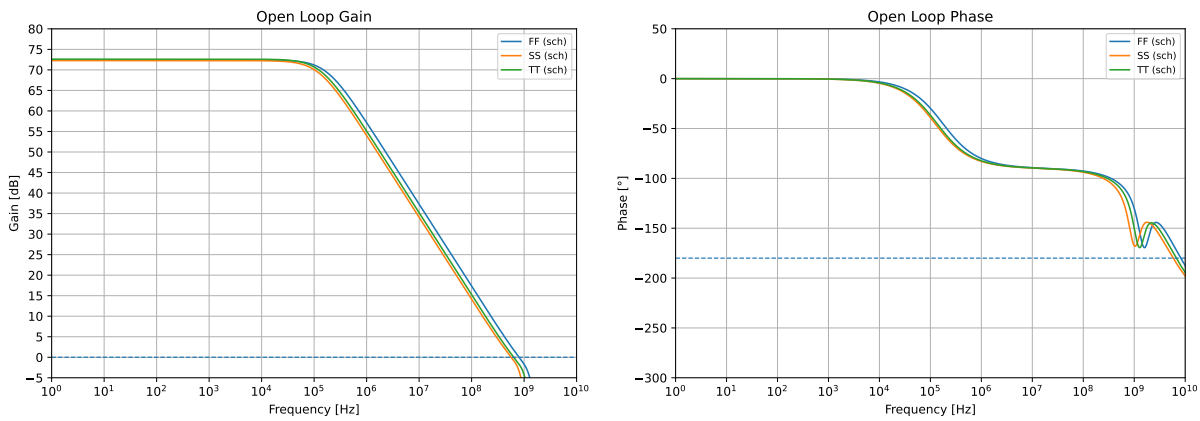

(a) (b)

Figure 9: Open loop AC performance of a) gain and b) phase

Table 8: Performance summary across corners

Metric	Target	TT	SS	FF
Gain [dB]	$\geq$ 70 dB	72.61	72.27	72.41
UGBW [MHz]	$\geq$ 540 MHz	636.5	571.53	802.65
PM [°]	$\geq$ 60°	64.16	60.12	62.30

4.2 Close Loop and FFT

Closed-loop transient and spectral simulations are performed to evaluate the MDAC behavior under realistic operating conditions. This was archived through the testbench show in Fig. 10. The time-domain waveforms in Fig. 11a demonstrate correct residue amplification and settling within the available clock phase, confirming functional operation of the switched-capacitor network and OTA.

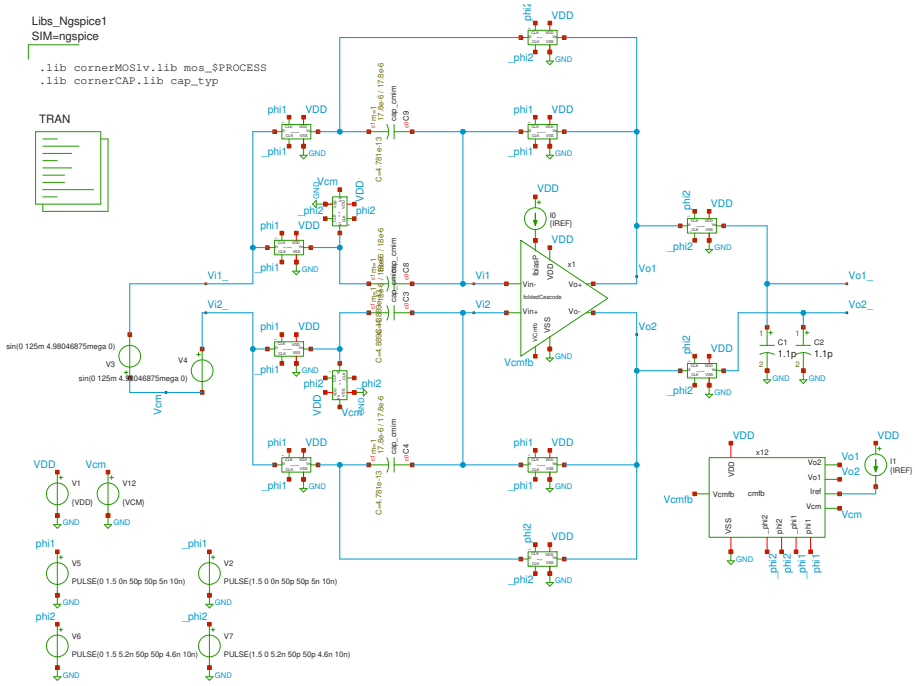

Figure 10: Close Loop Testbench

The FFT analysis in Fig. 11b shows that the system achieves an SNDR of approximately 64.8 dB and an ENOB above 10 bits in the typical corner. These results indicate that the MDAC meets the dynamic performance requirements for the target 10-bit ADC.

Table 9: Performance summary across corners at $f_{in} = 4.98046875$ MHz

Metric	TT	SS	FF
SNR [dB]	74.70	74.84	72.66
SNDR [dB]	64.12	61.57	65.96
THD [dB]	-64.52	-61.78	-67.00
SFDR [dB]	66.33	63.71	70.26
ENOB [bits]	10.36	9.93	10.66

Table 10: Performance summary across corners at $f_{in} = 43.26171875$ MHz

Metric	TT	SS	FF
SNR [dB]	72.87	69.28	72.41
SNDR [dB]	53.32	49.68	53.10
THD [dB]	-53.37	-49.73	-53.15
SFDR [dB]	55.72	52.06	55.63
ENOB [bits]	8.57	7.96	8.53

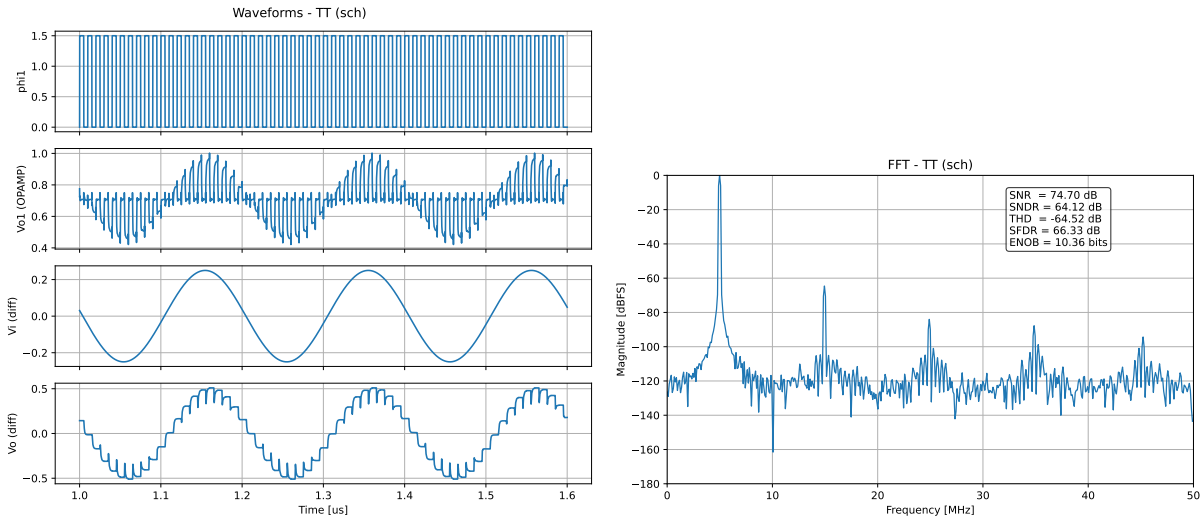

(a) (b)

Figure 11: Close loop TT performance in a) time domain and b) frequency domain

In addition to meeting the dynamic performance requirements, the proposed MDAC demonstrates a highly efficient power consumption profile (Table 11). Across process corners, the average power dissipation ranges from approximately 3.97 mW to 5.75 mW under a 1.5 V supply, with a nominal consumption of 4.68 mW in typical conditions. This reduced power footprint is primarily enabled by the use of a gain-boosted folded-cascode topology, which achieves the required gain and bandwidth without resorting to multi-stage amplification or excessive bias currents. Additionally, the design leverages moderate inversion operation (gm/ID optimization) and carefully sized capacitive loads to balance dynamic performance and energy efficiency. As a result, the MDAC achieves a favorable trade-off between speed, accuracy, and power.

Table 11: Power consumption summary across corners

Metric	TT	SS	FF
VDD [V]	1.5	1.425	1.575
I_{AVG} [mA]	3.12	2.79	3.65
P_{AVG} [mW]	4.68	3.97	5.75

5 Conclusion

This work presented a complete design methodology for a multiplying DAC (MDAC) stage targeting a 10-bit, 100 MS/s pipeline ADC in a 130 nm CMOS technology. Starting from system-level specifications, key design constraints for the residue amplifier were analytically derived, including requirements on gain, bandwidth, noise, and settling behavior. These specifications

guided the implementation of a gain-boosted folded-cascode OTA optimized for low-voltage operation and high-speed performance.

The proposed design achieves an open-loop gain above 72 dB, unity-gain bandwidth exceeding 570 MHz across corners, and phase margin greater than 60°, ensuring robust closed-loop stability. Transient and spectral simulations confirm correct MDAC operation, with SNDR up to 64 dB and ENOB above 10 bits in typical conditions, meeting the target resolution. Furthermore, the design maintains consistent performance under PVT variations, validating its robustness.

Additional building blocks, including a switched-capacitor common-mode feedback network and bootstrapped switches, were integrated to ensure accurate common-mode regulation and high linearity in the sampling process. Power consumption remains within acceptable limits for the targeted application, demonstrating an efficient trade-off between speed, accuracy, and energy.

Overall, the presented MDAC fulfills the requirements of a medium-resolution, high-speed pipeline ADC and provides a solid foundation for full converter integration, including comparator design and digital calibration.

Future work

The MDAC design presented here establishes the analog residue-amplification backbone of the pipeline stage. The next development steps for complete ADC realization focus on two key blocks:

(i) Comparator design. The following iteration should implement and verify a low-offset, high-speed dynamic comparator compatible with 100 MS/s operation and 1.5-bit/stage decision levels. Main tasks include kickback-noise mitigation toward the MDAC sampling nodes, metastability analysis under worst-case small-overdrive decisions, offset calibration strategy (if required), and robust operation across SS/TT/FF corners with ±5% supply variation.

(ii) Background digital calibration. A digital background engine should be added to continuously track and correct residue gain error, capacitor mismatch effects, and slow drift due to temperature/supply/process aging. The recommended path is to define an adaptive coefficient-estimation loop that runs during normal conversion (without foreground interruption), followed by fixed-point hardware mapping, convergence verification, and stability analysis of the analog-digital interaction loop.

At system level, future work should close the loop between these blocks and the current MDAC by means of full-stage and multi-stage behavioral/transistor co-simulation, so that static linearity, SNDR/ENOB, and calibration convergence can be validated simultaneously under PVT and Monte Carlo conditions.

References

[1] B. Razavi, *Analysis and Design of Data Converters.* Cambridge University Press, 2025.

[2] V. Kledrowetz and J. Haze, "Basic block of pipelined adc design requirements," *Radioengineering*, vol. 20, no. 1, pp. –, 2011.

[3] B. Razavi, "The design of a bootstrapped sampling circuit," *IEEE Solid-State Circuits Magazine*, vol. 13, no. 1, pp. –, 2021.