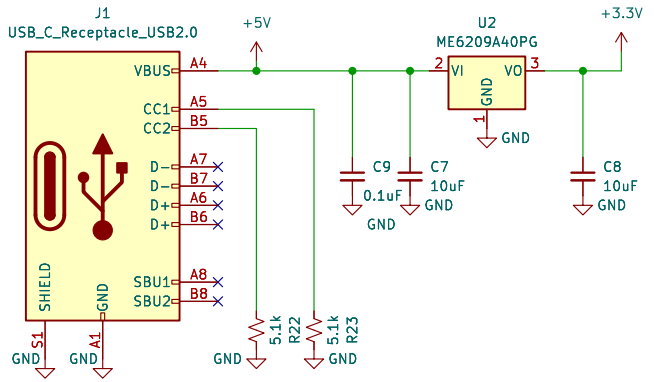

POWER

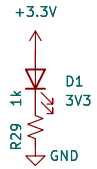

POWER LED

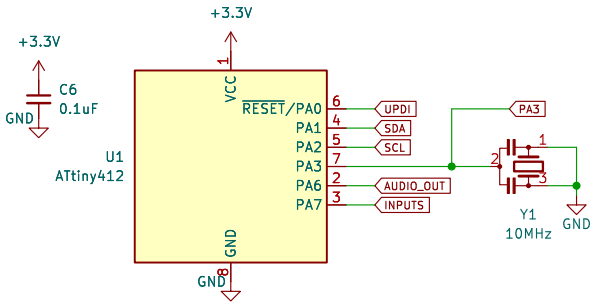

MICROCONTROLLER

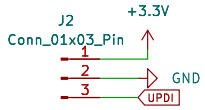

UPDI

MOUNTING HOLES

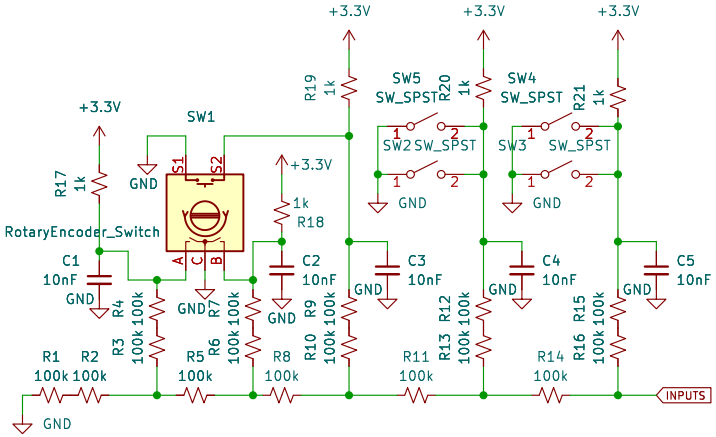

INPUTS

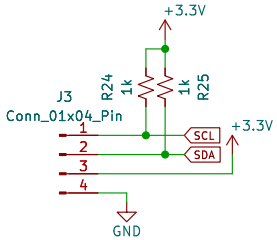

OLED

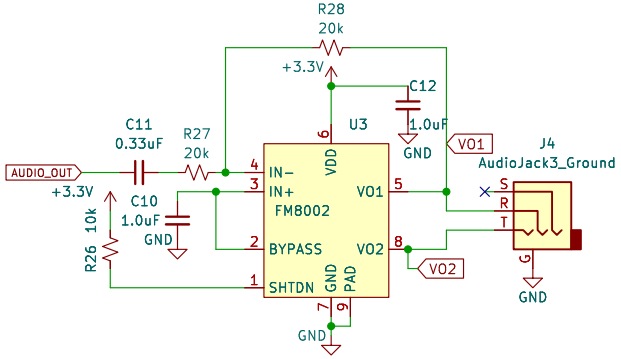

AUDIO AMP

Sheet: /
File: metronome.kicad_sch

Title:

Size: A4	Date:	**Rev:**
KiCad E.D.A. kicad 7.0.7		Id: 1/1