ROTAX® AIRCRAFT ENGINES

INSTALLATION MANUAL

FOR ROTAX® ENGINE TYPE 912 SERIES

ref. no.: IM-912 | part no.: 898643

picture: ROTAX® 912 ULS with options

⚠ WARNING

Before starting with engine installation, please read the Installation Manual completely as it contains important safety relevant information.

Before starting with engine installation, please read the Installation Manual completely as it contains important safety relevant information.

This Installation Manual for ROTAX® aircraft engines should only be used as a general guide for the installation of ROTAX® engines into airframes. It does not represent an instruction for the installation of a ROTAX® aircraft engine in a specific type of airframe or airplane. BRP-Powertrain GmbH & Co KG does not assume any warranty or liability in this context.

This Installation Manual shall in no event be used without fully complying with the specific instructions and/or requirements of the manufacturer of an airframe or airplane (“Manufacturer”). For verification and/or release of the engine installation, the respective Manufacturer must be contacted. Any modifications or adaptations to the airframe or airplane shall be carried out and/or be verified and released by the Manufacturer only.

Improper use of the Installation Manual and/or non compliance with the installation requirements of the Manufacturer can cause personal injury or property damage. BRP-Powertrain GmbH & Co KG disclaims any liability for any and all damage and/or injuries (including death) resulting from the improper use of this Installation Manual and/or non compliance with the installation requirements of the Manufacturer.

This technical data and the information contained herein is the property of BRP-Powertrain GmbH & CO KG and shall not be disclosed in whole or in part to any third parties without prior written approval of BRP-Powertrain GmbH & Co KG. This text must be included on any reproduction of these data, in whole or in part. This Installation Manual must remain with the engine/aircraft in case of sale.

Copyright 2015 © - all rights reserved.

ROTAX® is a trade mark of BRP-Powertrain GmbH & Co KG. In the following document the short form of BRP-Powertrain GmbH & Co KG = BRP-Powertrain is used. Other product names in this documentation are solely used for ease of identification and may be trademarks of the respective company or owner.

Approval of translation has been done to our best knowledge and judgement - in any case the original text in German language shall prevail.

Chapter: INTRO

GENERAL NOTE

Foreword

Before starting with the engine installation, read this Installation Manual carefully. The Manual will provide you with basic information on correct engine installation, a requirement for safe engine operation.

If any passages of this Manual are not clearly understood or if you have any questions, please contact an authorized distributor- or Service Center for ROTAX aircraft engines.

BRP-Powertrain GmbH & Co KG (hereinafter “BRP-Powertrain“) wishes you much pleasure and satisfaction flying your aircraft powered by this ROTAX aircraft engine.

Chapter structure

The structure of the Manual follows whenever it is possible the structure of the ATA (Air Transport Association) standards. The aim is the compatibility with the aircraft manufacturer‘s documentation, which means they must then adapt the documentation to their standard.
The Installation Manual is subdivided into the following chapters:

Subject	Chapter
Introduction	Chapter INTRO
List of effective pages	Chapter LEP
Table of amendments	Chapter TOA
General note	Chapter 00-00-00
Storage and Installation	Chapter 10-10-00
Electric system	Chapter 24-00-00
Propeller drive	Chapter 61-00-00
Engine	Chapter 72-00-00
Fuel system	Chapter 73-00-00
Cooling system	Chapter 75-00-00
Engine management	Chapter 76-00-00
Exhaust system	Chapter 78-00-00
Lubrication system	Chapter 79-00-00
Electric starter	Chapter 80-00-00

NOTES

Chapter: LEP

LIST OF EFFECTIVE PAGES

chapter	page	date
	Title page	
INTRO	1	08 01 2012
	2	08 01 2012
LEP	1	02 01 2015
	2	02 01 2015
	3	02 01 2015
	4	08 01 2012
TOA	1	02 01 2015
	2	08 01 2012
	3	02 01 2015
	4	08 01 2012
00-00-00	1	08 01 2012
	2	08 01 2012
	3	08 01 2012
	4	02 01 2015
	5	08 01 2012
	6	08 01 2012
	7	08 01 2012
	8	08 01 2012
	9	08 01 2012
	10	08 01 2012
	11	02 01 2015
	12	08 01 2012
	13	08 01 2012
	14	08 01 2012
	15	08 01 2012
	16	08 01 2012
10-10-00	1	08 01 2012
	2	08 01 2012
	3	08 01 2012
	4	02 01 2015
	5	08 01 2012
	6	08 01 2012
	7	08 01 2012
	8	08 01 2012
	9	08 01 2012
	10	02 01 2015
	11	08 01 2012
	12	08 01 2012
	13	08 01 2012
	14	08 01 2012

chapter	page	date
24-00-00	1	08 01 2012
	2	08 01 2012
	3	08 01 2012
	4	08 01 2012
	5	08 01 2012
	6	08 01 2012
	7	08 01 2012
	8	08 01 2012
	9	08 01 2012
	10	08 01 2012
	11	08 01 2012
	12	08 01 2012
	13	08 01 2012
	14	08 01 2012
	15	08 01 2012
	16	02 01 2015
	17	02 01 2015
	18	08 01 2012
	19	08 01 2012
	20	02 01 2015
61-00-00	1	08 01 2012
	2	08 01 2012
	3	08 01 2012
	4	02 01 2015
	5	08 01 2012
	6	08 01 2012
	7	08 01 2012
	8	08 01 2012
72-00-00	1	08 01 2012
	2	08 01 2012
	3	02 01 2015
	4	02 01 2015
	5	02 01 2015
	6	02 01 2015
	7	08 01 2012
	8	08 01 2012
	9	02 01 2015
	10	08 01 2012

chapter	page	date
73-00-00	1	08 01 2012
	2	08 01 2012
	3	02 01 2015
	4	02 01 2015
	5	02 01 2015
	6	02 01 2015
	7	08 01 2012
	8	02 01 2015
	9	02 01 2015
	10	02 01 2015
	10A	02 01 2015
	10B	02 01 2015
	11	08 01 2012
	12	08 01 2012
	13	08 01 2012
	14	02 01 2015
	15	08 01 2012
	16	08 01 2012
	17	08 01 2012
	18	08 01 2012
	19	08 01 2012
	20	08 01 2012
	21	08 01 2012
	22	08 01 2012
	23	08 01 2012
	24	08 01 2012
	25	08 01 2012
	26	08 01 2012
	27	08 01 2012
	28	08 01 2012
	29	08 01 2012
	30	08 01 2012
75-00-00	1	08 01 2012
	2	08 01 2012
	3	02 01 2015
	4	08 01 2012
	5	02 01 2015
	6	08 01 2012
	7	02 01 2015
	8	02 01 2015
	9	02 01 2015
	10	02 01 2015
	11	02 01 2015
	12	02 01 2015
	13	02 01 2015
	14	02 01 2015
	15	02 01 2015
	16	02 01 2015

chapter	page	date
75-00-00	17	02 01 2015
	18	02 01 2015
	19	02 01 2015
	20	02 01 2015
	21	02 01 2015
	22	02 01 2015
	23	02 01 2015
	24	02 01 2015
	25	02 01 2015
	26	08 01 2012
	27	02 01 2015
	28	02 01 2015
76-00-00	1	02 01 2015
	2	08 01 2012
	3	02 01 2015
	4	02 01 2015
	5	02 01 2015
	6	02 01 2015
	7	02 01 2015
	8	02 01 2015
	9	02 01 2015
	10	02 01 2015
	11	02 01 2015
	12	02 01 2015
78-00-00	1	02 01 2015
	2	08 01 2012
	3	08 01 2012
	4	08 01 2012
	5	08 01 2012
	6	08 01 2012
	7	02 01 2015
	8	02 01 2015
	9	08 01 2012
	10	08 01 2012
	11	08 01 2012
	12	08 01 2012
79-00-00	1	02 01 2015
	2	08 01 2012
	3	08 01 2012
	4	08 01 2012
	5	08 01 2012
	6	08 01 2012
	7	08 01 2012
	8	08 01 2012
	9	08 01 2012
	10	08 01 2012
	11	08 01 2012

d06095.fm

chapter	page	date
79-00-00	12	08 01 2012
	13	08 01 2012
	14	08 01 2012
	15	08 01 2012
	16	08 01 2012
	17	08 01 2012
	18	08 01 2012
	19	08 01 2012
	20	08 01 2012
	21	08 01 2012
	22	08 01 2012
	23	08 01 2012
	24	08 01 2012
	25	08 01 2012
	26	08 01 2012
	27	08 01 2012
	28	08 01 2012
	29	08 01 2012
	30	08 01 2012
	31	08 01 2012
	32	08 01 2012
80-00-00	1	08 01 2012
	2	08 01 2012
	3	08 01 2012
	4	02 01 2015
	5	08 01 2012
	6	08 01 2012
	Rear page	

I

NOTES

Chapter: TOA

TABLE OF AMENDMENTS

Approval*

The technical content of this document is approved under the authority of DOA ref. EASA.21J.048

no.	chapter	page	date of change	remark for approval	date of approval from authorities	date of inclusion	sign.
0	INTRO	all	08 01 2012	DOA*			
0	LEP	all	08 01 2012	DOA*			
0	TOA	all	08 01 2012	DOA*			
0	00-00-00	all	08 01 2012	DOA*			
0	10-10-00	all	08 01 2012	DOA*			
0	24-00-00	all	08 01 2012	DOA*			
0	61-00-00	all	08 01 2012	DOA*			
0	72-00-00	all	08 01 2012	DOA*			
0	73-00-00	all	08 01 2012	DOA*			
0	75-00-00	all	08 01 2012	DOA*			
0	76-00-00	all	08 01 2012	DOA*			
0	78-00-00	all	08 01 2012	DOA*			
0	79-00-00	all	08 01 2012	DOA*			
0	80-00-00	all	08 01 2012	DOA*			
1	LEP	1-3	02 01 2015	DOA*			
1	TOA	1,3	02 01 2015	DOA*			
1	00-00-00	4,11	02 01 2015	DOA*			
1	10-10-00	4,10	02 01 2015	DOA*			
1	24-00-00	16,17,20	02 01 2015	DOA*			
1	61-00-00	4	02 01 2015	DOA*			
1	72-00-00	3-6, 9	02 01 2015	DOA*			
1	73-00-00	3-6,8-10,	02 01 2015	DOA*			
1		10A,10B,14	02 01 2015	DOA*			
1	75-00-00	3,5,7-25,27,28	02 01 2015	DOA*			
1	76-00-00	1,3-12	02 01 2015	DOA*			
1	78-00-00	1,7-8	02 01 2015	DOA*			
1	80-00-00	4	02 01 2015	DOA*			

d06096.fm

NOTES

Chapter: TOA

SUMMARY OF AMENDMENTS

Content Summary of the relevant amendments in this context, but without requirement on completeness.

Current No.	chapter	page	date of change	Comment
0	all	all	08 01 2012	New Layout
0	24-00-00	6	08 01 2012	Graphic change, modify legend
0	61-00-00	4	08 01 2012	chap. 1.2) Wording of max. moment of inertia
0	73-00-00	6	08 01 2012	chap. 1.3) Requirements of the fuel system
0	73-00-00	14	08 01 2012	chap. 2.1.2) Drainage piping to the carburetor
0	73-00-00	22	08 01 2012	CO-Measurement for configuration with not GENUINE-ROTAX airbox
0	75-00-00	24	08 01 2012	chap. 4.1) Note added
0	78-00-00	3	08 01 2012	chap. 1) Caution added
0	78-00-00	11	08 01 2012	chap. 4.1) Muffler graphic change
1	10-10-00	4	02 01 2015	change of warranty for corrosion protection
1	24-00-00	16,17,20	02 01 2015	change of specification of capacitor (electric pump)
1	61-00-00	4	02 01 2015	change of graphic
1	72-00-00	3-6, 9	02 01 2015	change of position of temperature sensor, new cylinder head
1	73-00-00	3-6,8-10, 10A, 10B,14	02 01 2015	change of text, new text
1	75-00-00	3,5,7-25,27,28	02 01 2015	change from CHT to CT, new radiator
1	76-00-00	1,3-12	02 01 2015	change from CHT to CT
1	78-00-00	1,7,8	02 01 2015	new illustration of whole exhaust system

NOTES

Chapter: 00-00-00

GENERAL NOTE

Introduction

This section describes the installation of engine type ROTAX 912 Series.

NOTE: The ROTAX 912 Series includes all engines such as the 912 A, 912 F, 912 S, 912 UL and 912 ULS.

Table of contents

This chapter of the Installation Manual contains general and safety information concerning the operation and maintenance of the aircraft engine.

Subject	Page
General note	Page 3
Type description Standard version	Page 4 Page 5
Abbreviations and terms used in this Manual Conversion table	Page 7 Page 9
Safety notice Safety information Instruction Technical documentation	Page 10 Page 11 Page 13 Page 14

NOTES

1) General note

Purpose

The purpose of this Installation Manual is to acquaint maintenance service staff (iRMT) approved by the local aviation authorities with some basic installation and safety information for service work.

Documentation

For more detailed information regarding, installation, maintenance, safety- or flight operation, consult the documentation provided by the aircraft manufacturer and/or dealer.

For additional information on engines, maintenance or parts, you can also contact yout nearest authorized ROTAX-aircraft engine distributor.

ROTAX Distributors

For ROTAX Authorized Distributors for Aircraft Engines see latest Operators Manual or on the Internet at the official Website www.FLYROTAX.com.

Engine serial number

When making inquiries or ordering parts, always indicate the engine serial number, as the manufacturer makes modifications to the engine for product improvement. The engine serial number (1) is on the ignition cover, on the left, opposite the electric starter. See Fig. 1.

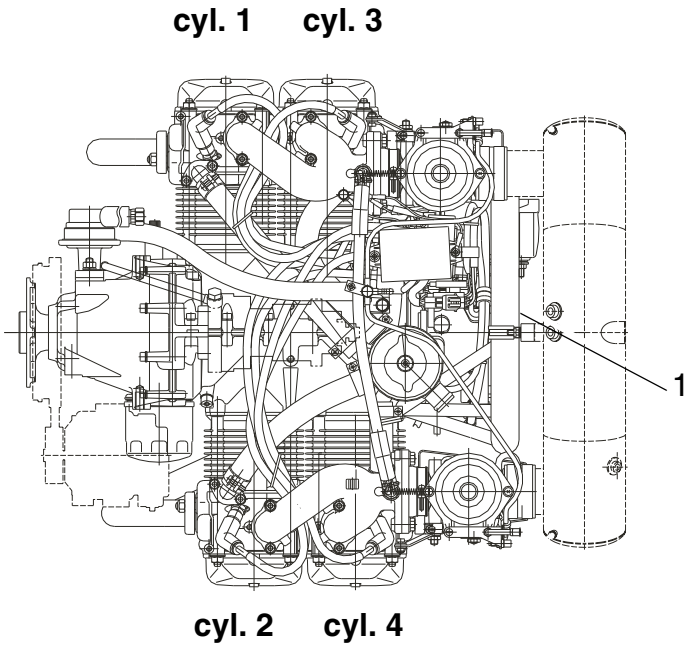

Fig. 1 *08749*

d06097.fm

2) Type description

e.g. ROTAX 912 A 2 -01

The type description is made up the following.

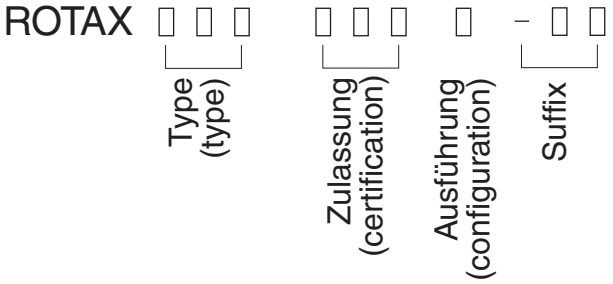

Designation

Designation		Description
Type	**912**	4-cyl. horizontally opposed, normal aspirated engine.
Certification	**A**	Certified to JAR 22 (TC No. EASA.E.121).
	F, S	Certified to FAR 33 (TC No. E00051 EN) JAR-E (TC No. EASA.E.121).
	UL, ULS	Non-certified aircraft engines.
Configuration	**2**	Prop shaft with flange for fixed prop.
	3	Prop shaft with flange for constant speed propeller and drive for hydraulic governor for constant speed propeller.
	4	With prop flange for fix pitch propeller, but prepared for retro-fit of hydraulic governor for constant speed prop (not supplied by manufacturer anymore.
Suffix	**-XX**	Explanation of the type designation suffix, see SB-912-068

Options

Available options (optional equipment) for the engine type mentioned above:

	External alternator	Vacuum-pump	Drive for rev counter/ hour meter	Governor
for configuration 2	yes	yes	yes	no
for configuration 3	yes	no	yes	yes
for configuration 4	yes	yes	yes	no

NOTE: Conversion of the configuration 2/4 to configuration 3 may be accomplished by ROTAX Authorized Distributors or their Service Center.

d06097.fm

2.1) Standard version

Serial production

- 4 stroke, 4 cyl. horizontally opposed, spark ignition engine, single central camshaft hydraulic tappets - push rods - OHV
- Liquid cooled cylinder heads
- Ram air cooled cylinders
- Dry sump forced lubrication
- Dual ignition of breakerless, capacitor discharge design
- 2 constant depression carburetors
- Mechanical fuel pumps
- Electric starter (12 V 0.7 kW), 912 S/ULS (12 V 0.9 kW)
- Integrated AC generator with external rectifier regulator
- Propeller drive via integrated gearbox with mechanical shock absorber and overload clutch

NOTE: The overload clutch is installed on all **serial production** aircraft engines which are certified and non-certified aircraft engines of the configuration 3.

Optional

- Electric starter (12 V 0.9 kW)
- External alternator (12 V 40 A DC)
- Vacuum pump (only for configuration 1, 2 and 4 possible)
- Hydraulic constant speed propeller governor (only for configuration 3)

Auxiliary equipment tested

NOTE: The following equipment is not included as part of the standard engine version!

NOTICE Any equipment not included as part of the standard engine version and so does not be part of the engine is not in the scope of supply.
Components especially developed and tested for this engine are readily available at BRP-Powertrain.

The following auxiliary equipment has been tested on ROTAX engine type 912 for safety and durability to the standards of aviation.

The furnishing of proof in accordance to the latest FAR or EASA has to be conducted by the aircraft manufacturer.

- Airbox
- External alternator
- Engine suspension frame
- Vacuum pump (feasible on configuration 2 and configuration 4 only)
- Drive for rev counter/hour-meter
- Oil cooler with connections
- Coolant radiator
- Coolant overflow bottle

Auxiliary equipment not tested

The following auxiliary equipment has <u>not</u> been tested on ROTAX engine type 912 for safety and durability to the standards of aviation.

⚠ WARNING Non-compliance can result in serious injuries or death!
The user assumes all risks possibly arising by utilizing auxiliary equipment.
The furnishing of proof in accordance to the latest FAR or EASA has to be conducted by the aircraft manufacturer.

- Exhaust system
- Intake filter
- Flydat
- Mechanical rev counter
- Electric rev counter
- Shock mount

---

d06097.fm

3) Abbreviations and terms used in this Manual

Abbreviations

Abbreviation	Description
*	Reference to another section
◐	center of gravity
💧	The drop symbol indicates use of sealing agents, adhesives or lubricants (only in the Illustrated Parts Catalog).
°C	Degrees Celsius (Centigrade)
°F	Degrees Fahrenheit
rpm	Revolutions per minute
912 A	see OM (Type designation)
912 F	see OM (Type designation)
912 S	see OM (Type designation
912 UL	see OM (Type designation)
912 ULS	see OM (Type designation)
A	Ampere
a.c.	alternating current
Ah	Ampere hour
A/C	Aircraft
A/F	Across-flat dimension
ASB	Alert Service Bulletin
ACG	Austro Control GmbH
API	American Petrol Institute
ASTM	American Society for Testing and Materials
ATA	Air Transport Association
AWG	American Wire Gauge
CAN	Controller Area Network
CAN/CGSB	Canadian General Standards Board
CSA	Constant Speed Actuator
CW	Clockwise
CCW	Counter-clockwise
DCDI	Dual Capacitor Discharge Ignition
d.c.	direct current
DOT	Department of Transport
DOA	Design Organisation Approval
EASA	European Aviation Safety Agency
iRMT	independent ROTAX Maintenance Technician
IM	Installation Manual
EGT	Exhaust Gas Temperatur

Abbreviation	Description
INTRO	Introduction
EMS	Engine Management System
EN	European Norm
IPC	Illustrated Parts Catalog
FAA	Federal Aviation Administration
FAR	Federal Aviation Regulation
OM	Overhaul Manual
hr.	hours
OM	Operators Manual
TOC	Table of Contents
ISA	International Standard Atmosphere
kg	kilograms
AD	Airworthiness Directive
MS	magneto side
MON	motor octane number
N	new part (only Illustrated Parts Catalog)
nB	as necessary (only Illustrated Parts Catalog)
n.a.	not available
NDT	non-destructive testing
Nm	newtonmeter
Rev.	Revision
ROTAX	is a trade mark of BRP-Powertrain GmbH & Co KG
RON	Research Octane Number
RV	Record of Revisions
S/N	Serial Number
SB	Service Bulletin
SI	Service Instruction
SL	Service Letter
SMD	Surface Mounted Devices
part no.	Part number
TSN	Time Since New
TSNP	Time Since New Part
TBO	Time Between Overhaul
V	Volt
VFR	Visual Flight Rules
LEP	List of Effective Pages
MM	Maintenance Manual
XXX	shows the serial component number

3.1) Conversion table

Units of length:

1 mm = 0.03937 in
1 in = 25.4 mm
1 ft = 12 in
= 0.3048 m

Units of area:

1 cm^2 = 0.155 sq. in (in^2)
1 sq. in (in^2) = 6.4516 cm^2

Units of volume:

1 cm^3 = 0.06102 cu in (in^3)
1 cu in (in^3) = 16.3871 cm^3 (in^3)
1 dm^3 = 1 l
1 dm^3 = 0.21997 gal (UK)
1 gal (UK) = 4.5461 dm^3
1 dm^3 = 0.26417 gal (US)
1 gal (US) = 3.7854 dm^3

Units of mass:

1 kg = 2.2046 lb
1 lb. = 0.45359 kg

Density:

1 g/cm^3 = 0.016018 lb/ft^3
1 lb/ft^3 = 62.43 g/cm^3

Units of force:

1 N = 0.224809 lbf
1 lbf = 4.4482 N

Units of pressure:

1 Pa = 1N/m^2
1 bar = 100000 Pa/1000 hPa/ 100 kPa
1 bar = 14.5037 lbf/in^2 (psi)
1 in Hg = 33.8638 hPa

Units of power:

1 kW = 1.341 hp
1 hp = 0.7457 kW
1 kW = 1.3596 PS
1 PS = 0.7355 kW

Units of temperature:

K = °C - 273.15
°C = (°F - 32) / 1.8
°F = (°C x 1.8) + 32

Units of velocity:

1 m/s = 3.6 km/h
1 ft/min = 0.3048 m/min
= 0.00508 m/sec
1 m/s = 196.85 ft/min
1 kt = 1.852 km/h
1 km/h = 0.53996 kn

spec. fuel consumption:

1 g/kWh = 0.001644 lb/hph
1 lb./hph = 608.277 g/kWh

Units of torque:

1 Nm = 0.737 ft lb.
= 8.848 in lb.
1 ft lb = 1.356 Nm
1 in lb = 0.113 Nm

Cable cross-section:
Conversion table-Wire Gauge:
AWG-mm^2

AWG	4	6	8	10	12	14	16	18	20
mm^2	21	13	8.4	5.3	3.3	2.1	1.3	0.8	0.52

4) Safety notice

General note

Although the reading of such information does not eliminate the hazard, it promotes the understanding and application of the information contained in for correct use of the engine. Always use common workshop safety practice.

The information and components system descriptions contained in this Manual are correct at the time of publication. BRP-Powertrain maintains a policy of continuous improvement of its products without imposing upon itself any obligation to install them on its products previously manufactured.

Revision

BRP-Powertrain reserves the right at any time, and without incurring obligation, to remove, replace or discontinue any design, specification, feature or otherwise.

Measure

Specifications are given in the SI metric system with the USA equivalent in parenthesis.

Symbols used

This Manual uses the following symbols to emphasize particular information. This information is important and must be observed.

⚠ **WARNING**	**Identifies an instruction which, if not followed, may cause serious injury including the possibility of death.**
⚠ **CAUTION**	**Identifies an instruction which, if not followed, may cause minor or moderate injury.**
NOTICE	**Denotes an instruction which, if not followed, may severely damage the engine or other component.**

NOTE: **Indicates supplementary information which may be needed to fully complete or understand an instruction.**

ENVIRONMENT NOTE

Environment note gives you tips and behaviors to environmental protection.

I **A revision bar outside of the page margin indicates a change to text or graphic.**

d06097.fm

4.1) Safety information

Use for intended purpose

⚠WARNING Non-compliance can result in serious injuries or death!
Only certified technicians (iRMT, see also Maintenance Manual Line) and trained on this product are qualified to work on these engines.

⚠WARNING Non-compliance can result in serious injuries or death!
Never fly the aircraft equipped with this engine at locations, airspeeds, altitudes, of other circumstances from which a successful no-power landing cannot be made, after sudden engine stoppage.

- This engine is not suitable for acrobatics (inverted flight, etc.).
- This engine shall not be used on rotorcrafts with an in-flight driven rotor (e.g. helicopters).
- It should be clearly understood that the choice, selection and use of this particular engine on any aircraft is at the sole discretion and responsibility of the aircraft manufacturer, assembler and owner/user.
- Due to the varying designs, equipment and types of aircraft, BRP-Powertrain grants no warranty or representation on the suitability of its engine‘s use on any particular aircraft. Further, BRP-Powertrain grants no warranty or representation of this engine‘s suitability with any other part, component or system which may be selected by the aircraft manufacturer, assembler or user for aircraft application.

⚠WARNING Non-compliance can result in serious injuries or death!
For each use of DAY VFR, NIGHT VFR or IFR in an aircraft, the applicable legal requirements and other existing must be adhered to.

- In addition to observing the instructions in our Manual, general safety and accident preventative measures, legal regulations and regulations of any aeronautical authority must be observed.
- Where differences exist between this Manual and regulations provided by any authority, the more stringent regulation should be applied.

- For continuing airworthiness see Maintenance Manual Line.
- Unauthorized modifications of engine or aircraft will automatically exclude any liability of the manufacturer for sequential damage.
- This engine may be equipped with an other than the GENUINE-ROTAX vacuum pump. The safety warning accompanying the air pump must be given to the owner/operator of the aircraft into which the air pump is installed.

Engine run

- In the interest of safety, the aircraft must not be left unattended while the engine is running.
- To eliminate possible injury or damage, ensure any loose equipment or tools are properly secured before starting the engine.
- When in storage protect the engine and fuel system from contamination and exposure.
- Never operate the engine and gearbox without sufficient quantities of lubricating oil.
- Never exceed the maximum permitted operational limits.
- Allow the engine to cool at idle for several minutes before turning off the engine.
- Propeller and its attachment with a moment of inertia in excess of the specified value must not be used and releases engine manufacturer from any liability.
- Improper engine installation and use of unsuitable piping for fuel-, cooling- and lubrication system releases engine manufacturer from any liability.

4.2) Instruction

General note

Engines require instructions regarding their installation, application, use, operation, maintenance and repair.

Technical documentation and directions are useful and necessary complementary elements for personal instruction, but can by no means substitute theoretical and practical instructions.

These instructions should cover explanation of the technical context, advice for operation, maintenance, use and operational safety of the engine.

Safety notice

In this technical Manual passages concerning safety are especially marked. Pass on safety warnings to other users!

Accessories

This engine must only be operated with accessories supplied, recommended and released by BRP-Powertrain. Modifications are only allowed after consent by the engine manufacturer.

Spare parts

NOTICE

Spare parts must meet with the requirements defined by the engine manufacturer. This is only warranted by use of GENUINE-ROTAX spare parts and/or accessories (see IPC) or suitable equivalent in the manufacturer's opinion otherwise, any limited warranty by BRP-Powertrain is null and void (see Warranty Conditions).
Spare parts are available at the authorized ROTAX Distributor and their Service Center.
Any warranty by BRP-Powertrain becomes null and void if spare parts and or accessories other than GENUINE-ROTAX spare parts and/or accessories are used (see latest Warranty Conditions).

Tools

NOTICE

In principle use only tools and appliances which are either cited in the Manual or in the Illustrated Parts Catalog.

State of delivery

⚠ WARNING

Engine and gearbox are delivered in "dry" conditions (without oil). Before putting engine in operation it must be filled with oil. Use only oil as specified (consult Operators Manual and SI-912-016 "Selection of suitable operating fluids" current issue).

4.3) Technical documentation

General note

These documents form the instructions ensuring continued airworthiness of ROTAX aircraft engines.

The information contained is based on data and experience that are considered applicable for authorized mechanics (iRMT, see Maintenance Manual Line) under normal conditions.

Due to the fast technical progress and fulfilment of particular specifications of the customers it may occur that existing laws, safety prescriptions, constructional and operational regulations cannot be transferred completely to the object bought, in particular for special constructions, or may not be sufficient.

Documentation

- Installation Manual
- Operators Manual
- Maintenance Manual (Line and Heavy Maintenance)
- Overhaul Manual
- Illustrated Parts Catalog
- Alert Service Bulletin
- Service Bulletin
- Service Instruction
- Service Letter

Status

The status of the Manuals can be determined with the aid of the table of amendments. The first column indicates the revision state.

This figure should be compared with the revision provided on ROTAX-Aircraft Engines Website: www.FLYROTAX.com.

Amendments and current versions can be downloaded free of charge.

Replacement pages

Furthermore the Manual is constructed in such a way that single pages can be replaced instead of the complete document. The list of effective pages is given in the chapter LEP. The particular edition and revision number is given on the footer of each page.

Reference

NOTICE This Manual for engine installation is only part of the Technical Documentation and will be supplemented by the respective Operators Manual, Maintenance Manual and Illustrated Parts Catalog.
Pay attention to references to other documentation, found in various parts of this Manual.

Any reference to a document refers to the latest edition issued by BRP-Powertrain, if no stated otherwise.

Illustrations

The illustrations in this Manual are mere sketches and show a typical arrangement. They may not represent in full detail or the exact shape of the parts which have the same or similar function. Therefore deduction of dimensions or other details from illustrations is not permitted.

NOTE: The Illustrations in this Manual are stored in graphic data base system and are provided with a consecutive irrelevant number. This number (e.g. 00277) is of no significance for the content.

Installation drawings

Installation drawings and a DMU-model for (virtual) installation analysis are available from the ROTAX Authorized Distributors or their Service Centers.

Graphic Installation drawing

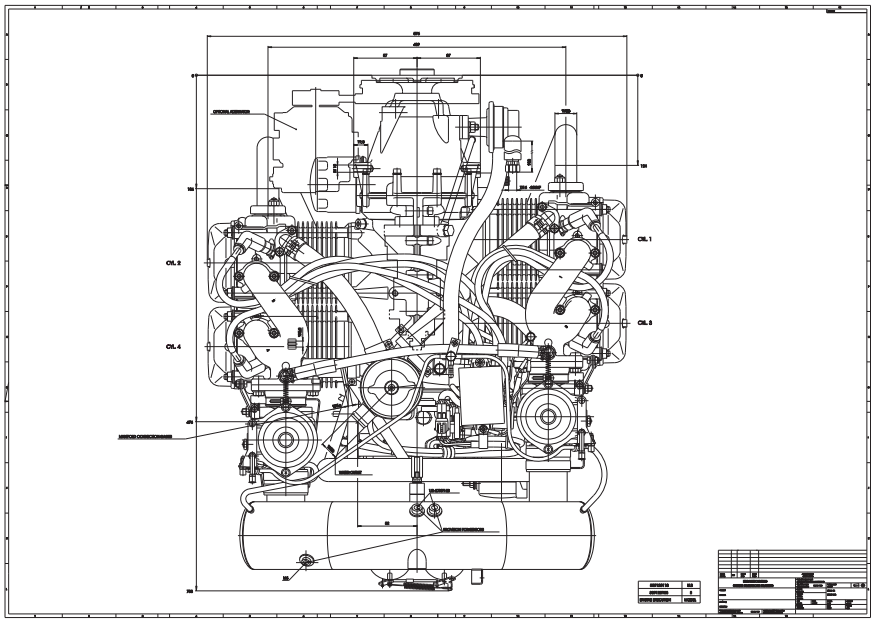

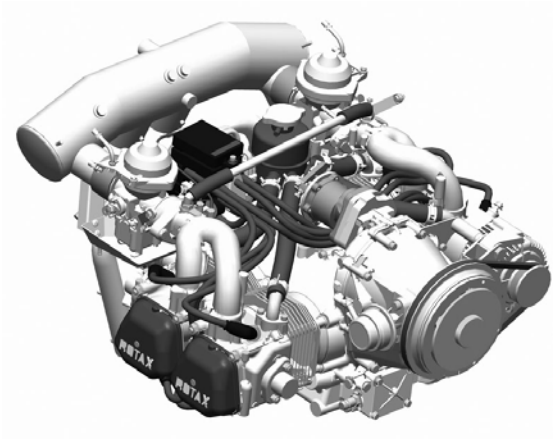

Fig. 2 *09171,09170*

d06097.fm

Chapter: 10-10-00

STORAGE AND INSTALLATION

Introduction

NOTICE The stated directives are measures that must be observed during every engine installation to prevent any accidents and engine damage.

Table of contents

This section of the Installation Manual contains state of delivery, transport, storage and aircraft engine installation.

Subject	Page
Preparations for engine installation	Page 3
State of delivery	Page 3
Unpacking/handling of the engine	Page 3
Preservation and storage of the engine	Page 4
Protective coverings	Page 5
Engine suspension and installation position	Page 6
Engine suspension instructions	Page 6
Attachment points	Page 8
Definition of attachment points	Page 9
Permissible installation positions	Page 12
Preparations for trial run of engine	Page 14
Conduct test run	Page 14
Verification of the throttle lever detent for max. continuous power	Page 14

NOTES

1) Preparations for engine installation

1.1) State of delivery

Attachment

NOTICE Risk of consequential damage to engine and aircraft as a result of corrosion and damage.
Under no circumstances is a corroded or damaged engine to be installed in an aircraft!

NOTICE The attachment screws are only for transport and must not be used in the aircraft.

The engine can be attached with steel angles anchored on a timber plate.

- When the engine is delivered, check that the GENUINE-ROTAX packing is not damaged.
- If the packing is damaged, contact the authorised sales and service partner for ROTAX aircraft engines.

1.2) Unpacking/handling of the engine

Unpacking the engine

To unpack a new engine, proceed as follows:

Step	Procedure
1	Remove the wooden cover.
2	Remove the protective packaging.
3	Remove the protective film around the engine.

After unpacking

To check the state of delivery, proceed as follows:

Step	Procedure
1	Check that the serial number and engine type designation on the type plate are identical to those shown on the delivery note.
2	Check the engine for damage or corrosion. If everything is deemed "OK", the engine can be accepted.

Suspension point

The engine to be lifted by two hooks or straps around the middle (A) of the intake manifolds.
See chapter engine views, numbering of cylinders and definitions of main axes.

1.3) Preservation and storage of the engine

General note

The engine is preserved at BRP-Powertrain thus guaranteeing proper protection against corrosion damage for at least 12 months after the date of delivery from BRP-Powertrain.

Warranty

This warranty is subject to the following conditions:

- The engine must be stored in the GENUINE-ROTAX packing as supplied by BRP-Powertrain.
- The covers on various openings must not be removed.
- The engine must be stored in a suitable place (at min. -40 °C/-40 °F and max. +80 °C/176 °F).
- The flat bag (blue) surrounding the engine must not be damaged or removed, as it protects the engine from corrosion and oxidation.

Storage

If the engine is stored for a period longer than 12 months (not stored in the GENUINE-ROTAX packing) then maintenance tasks must be carried out every 3 months as per the currently valid Maintenance Manual, section “Preservation of a new engine“.

1.4) Protective covering

General note

NOTICE Protective coverings are only for use during transport and engine installation. They must be removed before the engine is operated.

All openings are protected against ingress of contamination and dampness. It is recommended to leave the protective plugs in place until installation of the specific feed line.

NOTE: The transport equipment and plugs must be reattached if the engine will be sent to the manufacturer or distributor.

Protective covering

List of protective covering:

Installation place	Number
Exhaust socket	1x cone plug
Connection for manifold pressure	1x cap
Airbox	2x cap
Fuel pump inlet	1x cap
Connection for fuel return	1x plug
Connection for fuel pressure	1x plug
Oil supply and oil discharge	1x each cap
Supply and discharge of coolant	1x each cone plug
Propshaft on configuration 3	1x disk plug
Carburetor (if not equipped with an airbox)	2x disk plug

2) Engine suspension and installation position

General note

NOTICE During engine installation take into account the total engine weight and ensure careful handling.

Engine suspension

The engine suspension is essentially determined by the aircraft design. Eight attachment points are provided (4 on engine and 4 on engine frame).

Engine suspension frame

NOTICE If the engine suspension frame is not used or if modified, certification in accordance with the latest regulations, such as FAR or EASA, must be conducted by the aircraft manufacturer.

The engine is supplied with a tested and certified suspension frame for the fireproof bulk head. Installation in the aircraft is carried out using standard captive rubber mounts which also isolate vibration and noise from the aircraft frame.

2.1) Engine suspension instructions

General note

NOTICE The rubber mounts for neutralising vibrations and all engine suspension components not in the scope of delivery must be ground run tested at the specified loads and tested for vibration behaviour.
Certification to the latest regulations, such as FAR and EASA, must be conducted by the aircraft manufacturer.

Noise emmision and vibration

NOTICE The engine suspension must be designed to prevent excessive engine movement and to minimise noise emission and vibration on the airframe.

NOTICE If the GENUINE-ROTAX engine suspension frame is not being used, a vibration test must be carried out. See SL-912-010.

NOTE: With suspension on the 4 top lugs L3, R3, L4 and R4 only, the tilting moment due to the pull of the propeller will be avoided while, if attached on the bottom lugs only, the moment of tilting has to be taken care of accordingly.

Standard aircraft industry damping elements (e.g. Lord) are suitable. See Fig. 1.

Graphic

Engine suspension

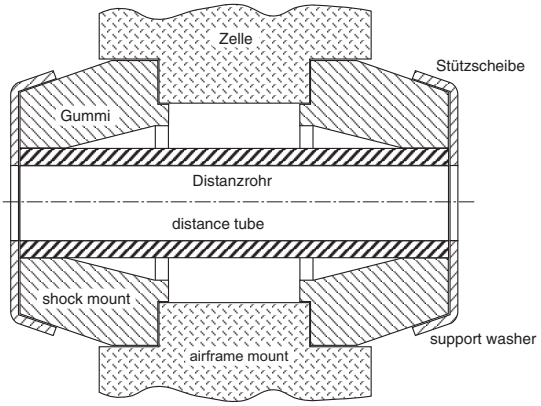

NOTE: The illustration shows Lord J 3608-1 or J 3608-2. rubber mounts. Consult the manufacturer for the dimensions of the rubber mounts.

Fig. 1 *07600*

Vibration neutralisation

The vibration and acoustic insulation factor is dependent on the cell manufacturer. Perform the determination as described in SL-912-010.

Damping elements

NOTICE All elements for neutralising vibrations must be captive.

Vertical axis

The y-axis must be perpendicular to the longitudinal axis of the aircraft.

Deviation

Permissible deviation from perpendicular: ±10°.
See Fig. 2.

Graphic Deviation

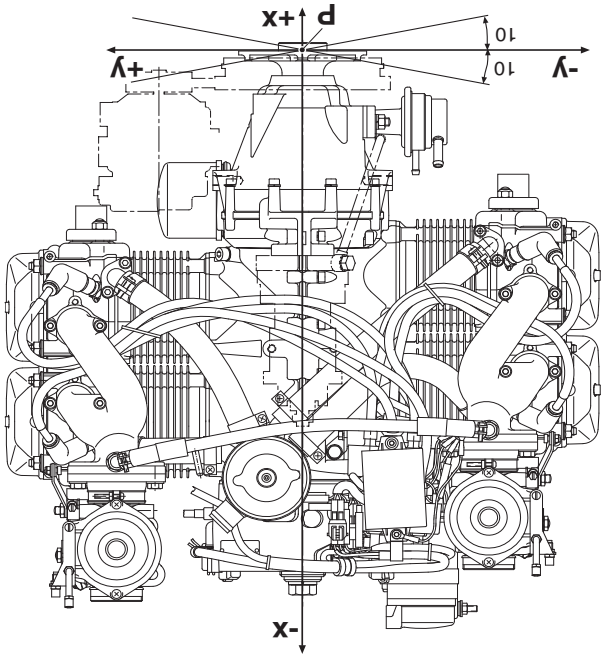

Fig. 2 *00515*

2.2) Attachment points

General note See Fig. 3.

NOTICE The hex. screws M10x60 in the attachment points are for transport only and must not be used for engine suspension.

It is recommended that the 4 stated attachment points R2, L2, R3 and L3 of the engine suspension frame are used.

NOTICE A minimum of 4 attachement points must be used. These must be distributed symmetrically between the left (L) and right (R) sides.

2.3) Definition of attachment points

General note

See Fig. 3.

⚠WARNING

Non-compliance can result in serious injuries or death!
The aircraft or fuselage manufacturer must design the engine suspension so that it can safely carry the maximum occurring operational loads without exceeding the max. allowable forces and bending moments on the engine housing and attachment points.

Tighten all engine suspension screws as specified by the aircraft manufacturer.

Graphic

Attachment points

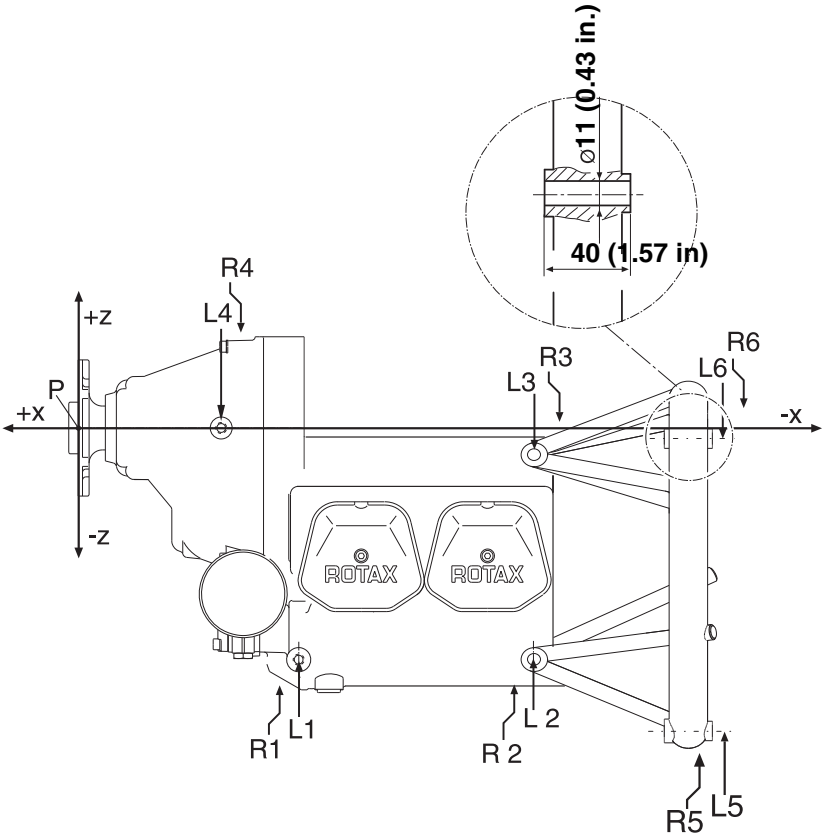

Fig. 3 08318

d06098.fm

attachment points	x-axis mm/in	y-axis mm/in	z-axis mm/in
L1	-200,8/-7.90 in.	71,0/2.80 in.	-211,0/-8.31 in.
R1	-200,8/-7.90 in.	-71,0/-2.80 in.	-211,0/-8.31 in.
L2	-414,3/-16.31 in.	71,0/2.80 in.	-211,0/-8.31 in.
R2	-414,3/-16.31 in.	-71,0/-2.80 in.	-211,0/-8.31 in.
L3	-414,3/-16.31 in.	75,0/2.96 in.	-22,0/-0.87 in.
R3	-414,3/-16.31 in.	-75,0/-2.96 in.	-22,0/-0.87 in.
L4	-128,3/-5.05 in.	87,0/3.43 in.	0
R4	-128,3/-5.05 in.	-87,0/3.43 in.	0
L5	-564,0/-22.20 in.	105,0/4.13 in.	-277,0/-10.91 in.
R5	-564,0/-22.20 in.	-105,0/-4.13 in.	-277,0/-10.91 in.
L6	-564,0/-22.20 in.	105,0/4.13 in.	-7,0/-0.28 in.
R6	-564,0/-22.20 in.	-105,0/-4.13 in.	-7,0/-0.28 in.

attachment points	max. permissible forces (secure load) in (N) lbf x, y and z axis	max. permissible bending moment (secure load) in (Nm) ft.lb x, y and z axis
L1	5000 N/1124 lbf	77 Nm /56.8 ft.lb
R1		
L2	5000 N/1124 lbf	77 Nm/56.8 ft.lb
R2		
L3	5000 N/1124 lbf	77 Nm/56.8 ft.lb
R3		
L4	1900 N/427 lbf	39 Nm/28.8 ft.lb
R4		

	max. permissible forces (secure load) in (N) lbf			max. permissible bending moment (secure load) in (Nm) ft.lb
attachment points	x axis	y axis	z axis	x, y, and z axis
L5	5000 N/ 1124 lbf	2000 N/ 450 lbf	3000 N/ 674 lbf	100 Nm/ 73.75 ft.lb
R5				
L6				
R6				

attachment point	thread size	max. usable thread length mm/in.
L1	M10	25 mm/0.98 in.
R1		
L2	M10	25 mm/0.98 in.
R2		
L3	M10	25 mm/0.98 in.
R3		
L4	M10	19 mm /0.75 in.[1)] 16 mm /0.63 in.[2)]
R4		

[1)] up to gearbox S/N 28986
[2)] starting from gearbox S/N 28987

2.4) Permissible installation positions

General note

See Fig. 4

NOTICE The oil system, fuel system and the cooling system are unsuitable for upside-down/inverted installation of the engine.

NOTE: Dimensions are always from zero reference point and the coordinate system position remains unchanged.

Installation positions

The following installation position details refer to the aircraft in parked position (aircraft on ground, ready for take off).

- Engine suitable for propeller in tractor or pusher arrangement
- Installation only with propeller shaft above cylinders

Propeller axis

The centres of attachment points L1 and R1 must be on a y2 axis parallel to the y-axis.

Permissible deviation from parallelism: ± 5°

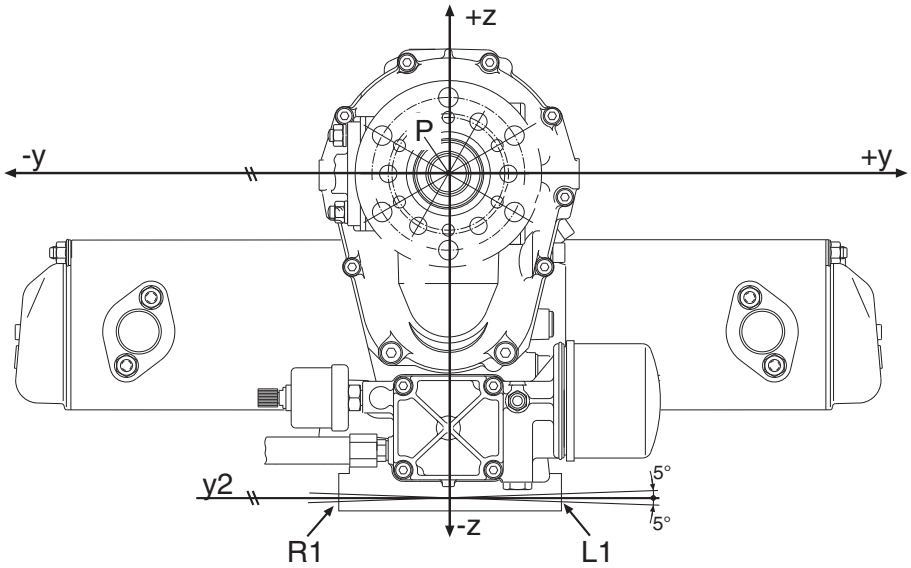

Fig. 4 02454

Vertical axis

The y-axis must be perpendicular to the longitudinal axis of the aircraft.

Permissible deviation from perpendicular: ± 10°

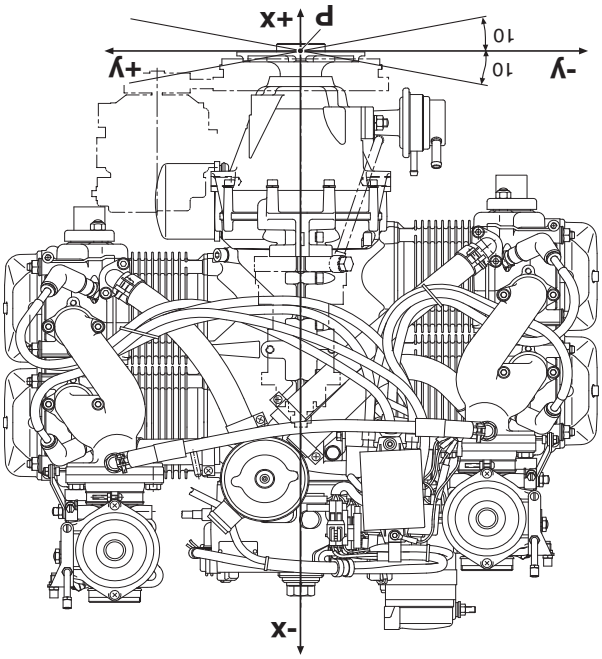

Fig. 5 *00515*

3) Preparations for trial run of engine

General note

⚠WARNING Non-compliance can result in serious injuries or death! Prior to engine start and operation review all instructions stated in the Operators Manual.

3.1) Conduct test run

Instruction

See Operators Manual 912 chapter. 3.

3.2) Verification of the throttle lever detent for max. continuous power:

Instruction

Performance check in accordance with Operators Manual.

If nominal performance won‘t be reached or is in excess of, examination of the installation and engine will be necessary.

NOTICE Don‘t conduct any test flights before fault has been traced and found.

Chapter: 24-00-00

ELECTRIC SYSTEM

Intro

The engine is supplied with the wiring completed and ready to operate. Only the following connections to the aircraft have to be established:

- integrated generator
- external rectifier-regulator
- electronic modules
- electric starter
- start relay
- items conditional for operation like circuit breakers, ON-OFF switches, control lamps, relays, instrumentation and capacitors.

Optional extras

- external alternator (as option if the output of the integrated generator is inadequate.
- electric rev counter (accessory).
- consumer (battery).

Table of contents

This section contains information about electronic modules, electric starter and wiring diagram of the engine.

Subject	Page
Requirements for the circuit wiring Electromagnetic compatibility (EMC/EMI)	Page 3 Page 4
Technical data and connection of the electric components Integrated generator	Page 5 Page 5
Rectifier-regulator Requirements for flawless operation of the rectifier-regulator	Page 6 Page 7
Electronic modules	Page 8
Ignition switches (MAG switch) Connection Assembly of the flat pin terminal	Page 9 Page 9 Page 11
External alternator (optional extra) Technical data Connection Requirements for correct operation of the integrated rectifier-regulator	Page 13 Page 13 Page 13 Page 14
Connection of the electric rev counter (tachometer) Technical data Connection	Page 16 Page 16 Page 16

Subject	Page
Battery	Page 16
Capacitor (Option electrical fuel pump)	Page 16
Easy start function on the electronic module (optional)	Page 17
Wiring diagram	Page 18

1) Requirements for the circuit wiring

General note

NOTICE The connections have to be made by the aircraft manufacturer in accordance with applicable regulations and the enclosed wiring diagram.
See chap. 24-00-00 section: Switch requirements.

NOTICE The power supply to the various consumers (e.g. battery) must be adequately protected by fuses. Using incorrectly rated fuses may result in destruction of the equipment.

Under no circumstances must consumer cables (e.g. battery) be routed alongside the ignition cable. There is a risk of electromagnetic interference or damage.

NOTICE Do not bend, kink, pinch or otherwise improperly stress the wiring harness. Use proper routing, clamping and strain relief on wiring harnesses.

1.1) Electromagnetic compatibility (EMC/EMI)

Electromagnetic interference

Electromagnetic interference (EMI) and lightning

The engine complies with EMI and lightning requirements as per DO-160C, sections 18, 20-22 as detailed in the following paragraphs.

Emission

Emission

Conductive radio interference:

Narrowband and broadband emissions meet RTCA DO160C Section 21-2 Cat. B (AZ) requirements except in the frequency range of 150 kHz-2 MHz where emissions are up to 20 dB higher than allowable limits.

Radiated radio interference:

Narrowband and broadband emissions meet RTCA DO160C Section 22, item 21-6 and 21-7, Cat. B requirements except in the frequency range of 190 kHz-2 MHz where emissions are up to 35 dB higher than allowable limits.

NOTE: Consult the aircraft manufacturer if further interpretation is needed. The exceeded limits do not affect the operation of the engine.

Electromagnetic compatibility

Electromagnetic compatibility (EMC)

The engine complies with the electromagnetic interference and lightning strike requirements of DO-160C, section 18, 20-22 and IEC 801-2.

The following EMC tests have been carried out:

- Radio frequency (RF) sensitivity (conducted)
- Radio frequency (RF) sensitivity (radiated)
- Audio frequency sensitivity
- Lightning strike sensitivity
- Conducted radio frequency (RF) interference
- Radiated radio frequency (RF) interference

2) Technical data and connection of the electric components

2.1) Internal generator

General note

NOTE: Approx. 250 W AC output at 5800 rpm. For DC output in connection with rectifier-regulator. See chap. 24-00-00 section: 3).

Connection

See Fig. 1.

Feeding wires (1) from the generator to rectifier-regulator on left side of ignition housing.

- 2 flexible cables, 1.5 mm^2 yellow (in shielding metal braid)
- length approx. 660 mm (26 in.) starting from ignition housing
- with on each plug socket 6.3 x 0.8 to DIN 46247

Graphic

Connection

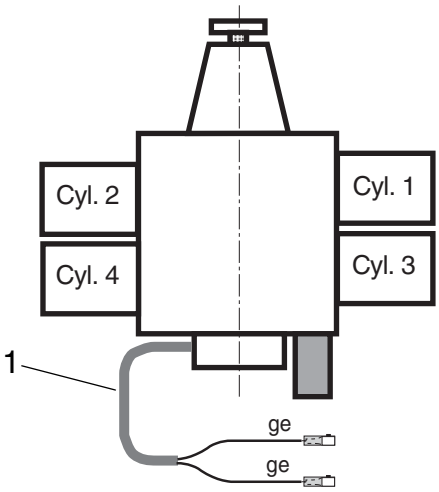

Part	Function
1	Feeding wires (yellow)

Fig. 1 02498

2.2) Rectifier regulator

Type

Electronic full-wave rectifier regulator.

Output voltage

14.2 V± 0.3 (from 1000 ± 250 rpm).

Current limit

Current limit:

Max. 22 A.

Component temperature

Max. permissible component temperature:

+80 °C (176 °F) (measured in area (1)).

NOTE: The performance specifications are given for optimal cooled components. If necessary, use a separate heat sink for the rectifier regulator.

Weight

See chap. 72-00-00 section: weight.

Graphic

Connection

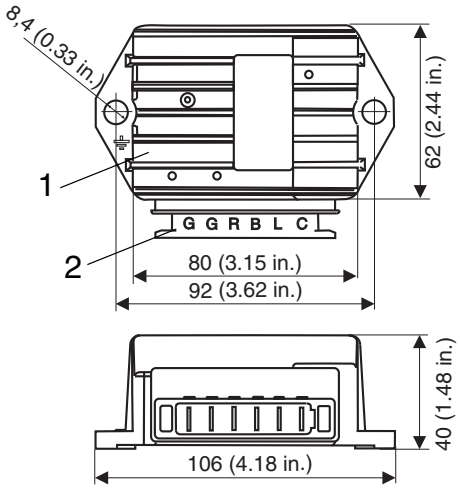

Part	Function
1	Area component temperature
2	Description of connections: G = yellow - from generator R = red - to battery, positive terminal B = battery positive terminal L = warning lamp circuit C = control or field circuit

Fig. 2

08631

d06099.fm

2.2.1) Requirements for flawless operation of the rectifier-regulator

General note

NOTICE The voltage difference between battery and terminal **C** of regulator should be less than 0.2 V.

Use cables in this area as short as possible and with adequate cross section.

NOTICE Never sever connection between terminal **C** and **B** of regulator (e.g. by removal of a fuse) while the engine is running. Overvoltage and regulator damage can occur.

During engine stop break circuit between battery and terminal C to avoid discharge of battery! (see Fig. 11).

NOTE: A charge-indicating lamp 3 W/12 V (see Fig. 11 pos. 18) may be fitted on the instrument panel.

Body of regulator

Body of regulator must be grounded with no restance allowed.

Fuse

The rectifier-regulator has to be protected by a slow blowing 25 A fuse.

Wire size

Wire size of the main circuit of at least 2.5 mm^2 (14 AWG).

Capacitor

A capacitor (see Fig. 11 pos. 14) of at least 22000 µF/25 V is necessary to protect the correct function of regulator and to flatten voltage. The regulator is not designed to store any electrical charge. If for any reason the battery or bus system is disconnected from the regulator while the engine is running (i.e. the master switch is shut off) the capacitor will safely absorb and dissipate the electrical charge produced by the generator. Otherwise the regulator would be damaged.

Amperage

NOTICE The graph current over engine speed has been determined and is valid only at the following conditions:

- Ambient temperature: 20 °C (68 °F)
- Voltage: permanent 13.5 V
- Tolerance: max ± 5 %

Graphic Current

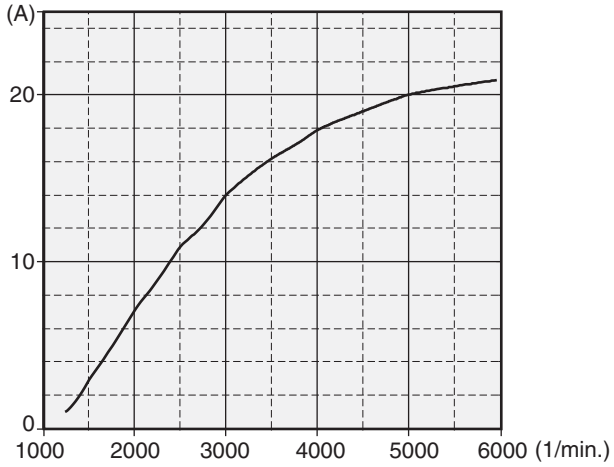

Fig. 3 *02500*

2.3) Electronic modules

See Fig. 4.

Component temperature Component temp. for the electronic modules (1): max. 80 °C (176 °F).

2.4) Ignition switches (MAG switch)

Type Two separate, suitable on-off switches (Fig. 11 pos. 15).

Switching voltage Min. 250 V.

Switching current Min. 0.5 A.

2.4.1) Connection

Wires See Fig. 4.

Wires from the ignition switches connect to the electronic module (1).

Graphic Electronic modules

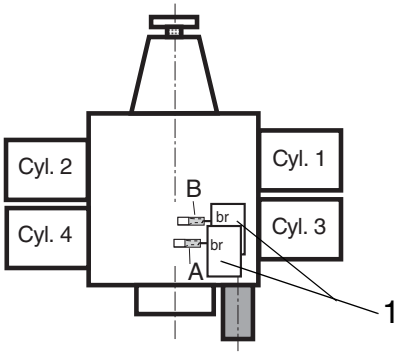

Part	Function
1	Electronic modules

Fig. 4 *02501*

Wire See Fig. 5.

NOTICE The electromagnetic compatibility (EMC) and electromagnetic interference (EMI) depends essentially on the wire used.

Min. section area: 2x 0.75 mm^2 (18 AMG) (shielded flexible cable, shielding braid on both ends grounded to prevent EMI (e.g. specification MIL-27500/18).

NOTICE No or insufficient shielded cables can cause engine shut-off due to electromagnetic and radio interference.

The metal base of each ignition switch must be grounded to aircraft frame to prevent EMI.

Wire A Wire of top electronic module (marked “A“) for ignition circuit A.

Wire B Wire of bottom electronic module (marked “B“) for ignition circuit B.

Ignition circuit A NOTE: Ignition circuit A controls: top spark plugs of cylinder 1 and 2; lower spark plugs of cylinder 3 and 4.

Ignition circuit B NOTE: Ignition circuit B controls: top spark plugs of cylinder 3 and 4; lower spark plugs of cylinder 1 and 2.

Graphic Wire

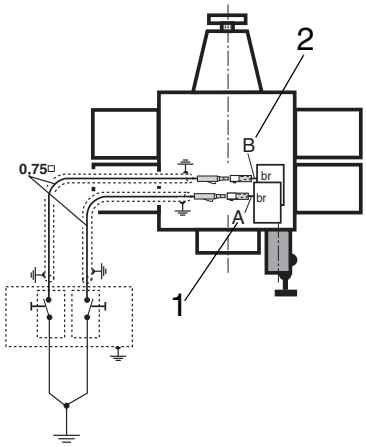

Part	Function
1	Wire for ignition circuit A
2	Wire for ignition circuit B

Fig. 5 *07602*

Flexible wire One each flexible wire 0.75 mm^2 (18 AMG), brown.

Length approx. 35 mm (1 3/8“) beginning at electronic module with one each plug socket and insulating sleeve 3.96 mm. At the new version the cable grommet and fasten connector are integrated in the 6-pole connector housing. See also SI-912-013, latest issue.

2.4.2) Assembly of the flat pin terminal

General note

See Fig. 6.

NOTE: One each cable grommet (1) and flat pin terminal (2) are supplied loosely packed.

Special tools

The following special tools and equipment are necessary for fitting the Faston connector.

Part number	Description
n.a.	MOLEX Crimping pliers 64016-0035
n.a.	MOLEX Disassembly total 63813-1500

Procedure

Assembly of the flat pin terminal

Step	Procedure
1	Strip cable (3) as required.
2	Install the cable grommet (1) in correct position and direction (**A**).
3	Use suitable crimping pliers (4) to fit the fasten connector (**B**).
4	The rubber grommet is held by the secondary crimp.
5	Push the faston connector in the corresponding slot (4) of the connector receptacle until it is locked in place (**C**).
6	Check for tight fit.
7	Press the pin holder (white) downwards using the long nose pliers.

NOTE: Faston connector and insulation sheath of the old version are available as spare part. See also SI-912-013, latest issue.

NOTE: The pin holder must not be pressed with excessive force.

Graphic Assembly of the flat pin terminal

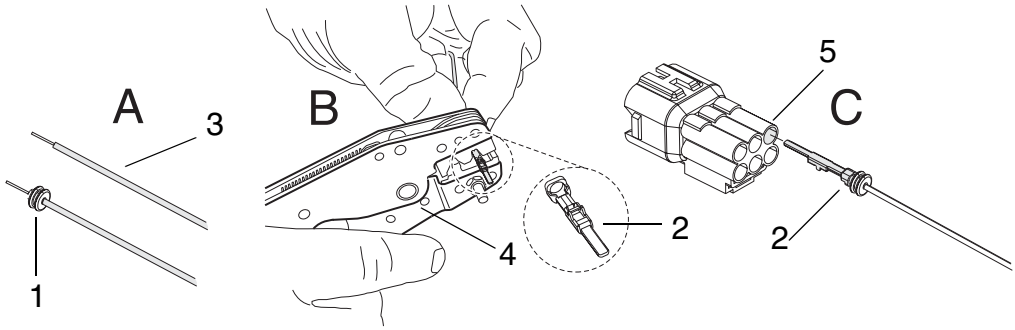

Part	Function
1	Cable grommet
2	Flat pin terminal
3	Wiring (airframe)
4	Crimping pliers
5	Position in the connector housing

Fig. 6 *08323*

2.5) External alternator (optional extra)

General note See Fig. 7.

2.5.1) Technical data

General note	NOTE:	The voltage regulator is integrated in the alternator.
Output	Output: Max. 600 W/DC at 6000 r.p.m.	
Output Voltage	Output Voltage: 14.2 V - 14.8 V.	
Ambient temperature range	Ambient temperature:	Min. -30 °C (-22 °F) Max. +90 °C (194 °F)
Weight	See chap. 72-00-00 section: Technical data.	

2.5.2) Connection

Power supply wires	Power supply wires to external alternator (1) located on the outside of propeller gear.
Positive terminal	Positive terminal (2): - M6 screw connection suitable for cable terminal acording to DIN 46225 (tightening torque 4 Nm (35 in.lb).
Grounding	Via engine block.
Control wiring	Control wiring (field circuit) (3): - Via supplied standard plug (Sumitomo 6111-2568) and 6.3 x 0.8 Fasten connectors.

Graphic External alternator

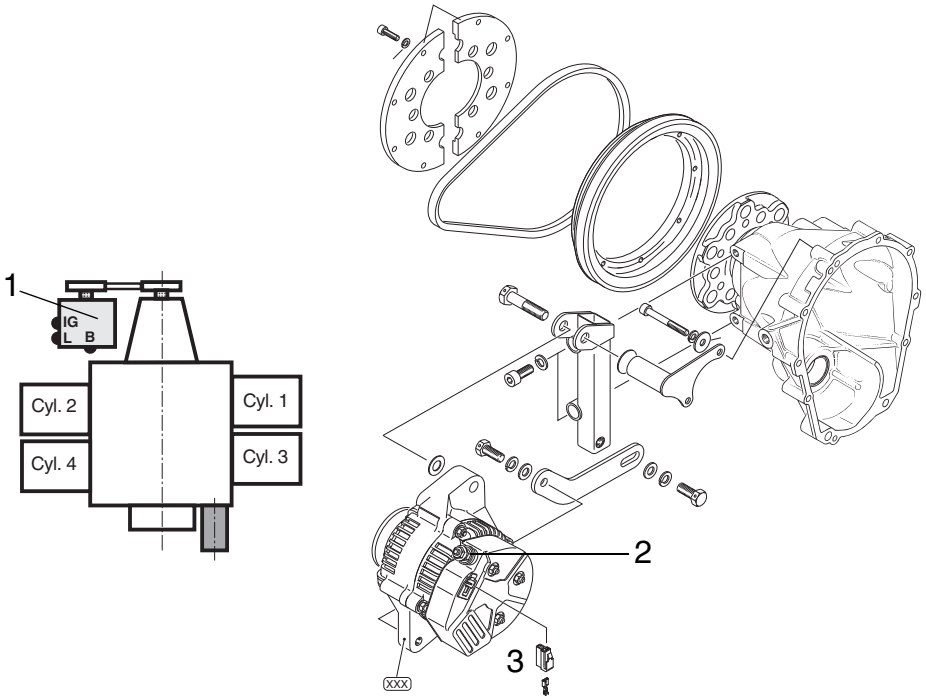

Teil	Funktion
1	External alternator
2	Positive terminal
3	Control wiring

Fig. 7 *03199,02764,00547*

2.6) Requirements for correct operation of the integrated rectifier regulator

Fuse The rectifier regulator must be protected by a slow blowing fuse or circuit breaker. Fuse or circuit breaker rating must be determined by load, wire size and length.

Cross section Wire size of the main circuit at least 4 mm^2 (0.006 in^2).

Capacitor A capacitor of at least 22000 µF/25 V is necessary to flatten voltage.

Amperage

NOTICE The current over speed graph was determined and is only effective under the following conditions:

- Ambient temperature: 20 °C (68 °F)
- Voltage: constant 13.5 V
- Tolerance: max. ± 5%

NOTE: The speed of the external generator is 1.24 times the crankshaft speed or 3 times the propeller speed.

Graphic

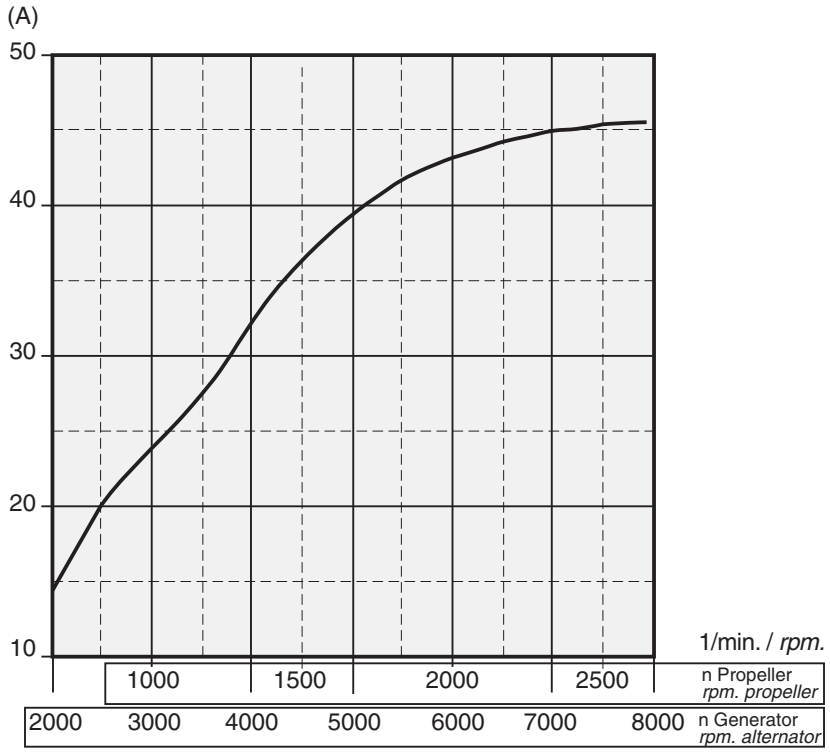

Fig. 8 *00547*

2.7) Connection of the electric rev counter (tachometer)

2.7.1) Technical data

Output signal

NOTICE The graphs depicting output signals have been determined and are effective only at the following conditions:

- Ambient temperature: 20 °C (68 °F)
- Tolerance: Max. ± 5%

NOTE: The pick-up for the rev counter generates one pulse per revolution.

2.7.2) Connection

General note

NOTICE BRP-Powertrain developed especially for this application a non-certified electric rev counter. Certification to the latest requirements such as FAR or EASA has to be conducted by the aircraft manufacturer. See also SI-13-1996, latest issue.

Feeding wiring

Feeding wiring to electric rev counter on left side of ignition housing.

- Length approx. 600 mm (24 in.) starting from ignition housing.

Connections

2 flexible cables 0.5 mm^2, white/yellow and blue/yellow (in insulation wrap).

2.8) Battery

General note

See Fig. 11.

NOTICE To warrant reliable engine start use a battery of at least 16 Ah capacity.

2.9) Capacitor (Option electrical fuel pump)

General note

See Fig. 11.

NOTICE To warrant reliable operation of the electrical fuel pump the use of capacitor of at least 1 µF/25 V is necessary.

2.10) Easy start function on the electronic module (optional)

General note

See Fig. 10.

In order to use the easy start function the relevant connections to the starter relays and ignition switch need to be made.

The start function can be used for aircraft, which have an engine start problem in cold conditions.

NOTE: In addition also a modified fly wheel hub is offered, which aids improved starting.

Graphic

Easy start function

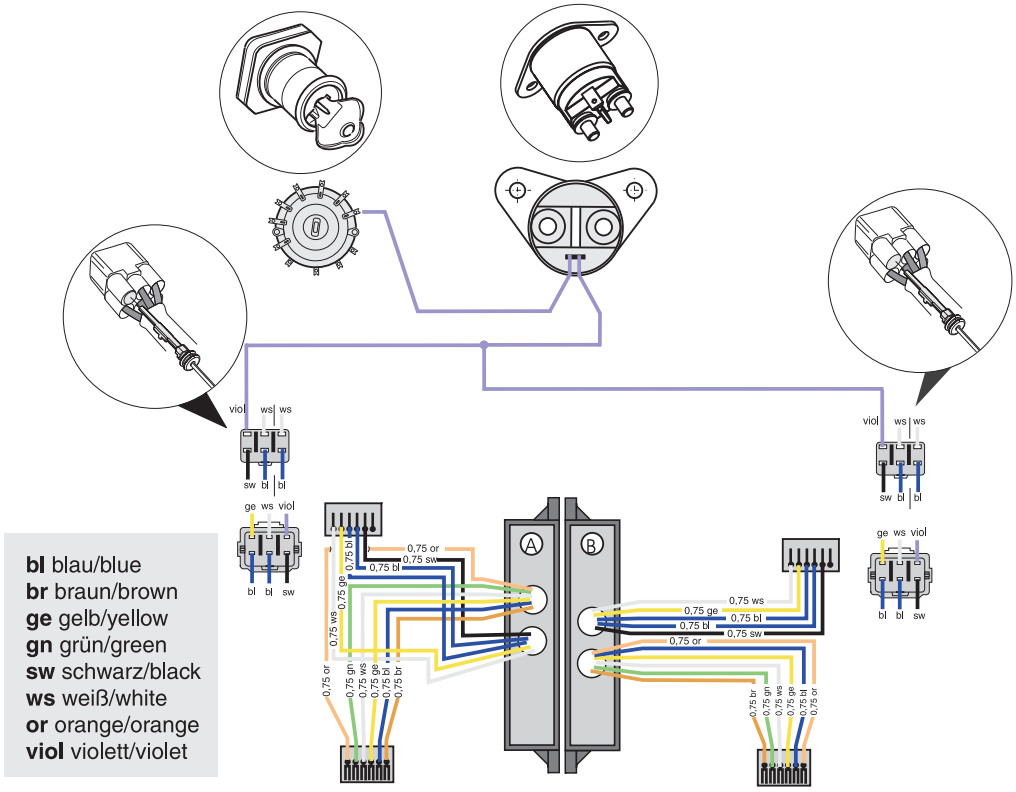

Fig. 10 *08556*

2.11) Wiring diagram

General note

See Fig. 11.

Scope of delivery

NOTICE Items/components which are not included in the standard engine scope of delivery must be certified the aircraft or fuselage manufacturer in accordance with the latest regulation, such as FAR or EASA.

Position	Supply
1-9	Are included in the standard volume of supply of the engine.
22-24	Are included in the standard volume of supply of the engine.
10-14	Are available as accessory.
15-22	Can‘t be supplied by BRP-Powertrain.
25	Can‘t be supplied by BRP-Powertrain.

Graphic Wiring diagram

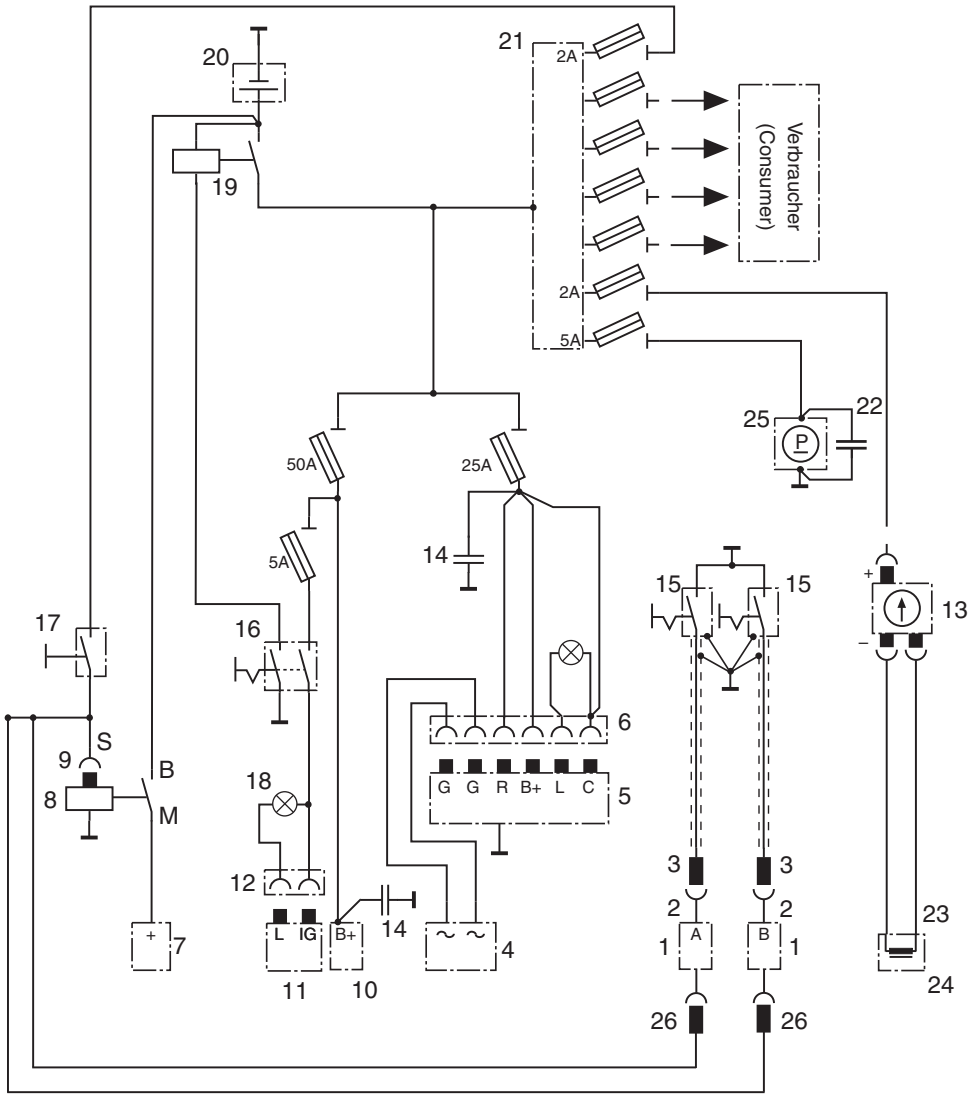

d06099.fm

Legend to wiring diagram

Part	Function	Part	Function
1	2 Electronic modules (A and B)	17	Starter switch
2, 3	Plug connection for ignition switch	18	Control lamp
4	Integrated generator	19	Battery relay
5, 6	External regulator - rectifier with plug connections	20	Battery
7	Electric starter	21	Bus Bar
8, 9	Starter relay with plug connection	22	Capacitor 1 µF
10, 11, 12	External alternator with connection	23	Plug connection for trigger coil assy.
13	Electric rev counter	24	Trigger coil assy. (tachometer)
14	2 capacitor 1 µF	25	Electrical fuel pump
15	2 ignition switches	26	Starting equipment at the electronic modules
16	Masterswitch		

Fig. 11 *08639*

Chapter: 61-00-00

PROPELLER DRIVE

Instruction

⚠ WARNING

Danger of explosion.
Never operate the engine without propeller as this results in serious engine damage from overspeeding.
Never fit the propeller directly on the crankshaft.

Table of contents

This section of the Installation Manual contains information on the engine propeller component.

Subject	Page
Propeller drive Technical data Operating limits	Page 3 Page 3 Page 4
Vacuum pump Technical data	Page 5 Page 5
Hydraulic governor for constant speed propeller Technical data for connections	Page 7 Page 7

NOTES

1) Propeller drive

General note

The propeller in tractor or pusher arrangement must be fitted on the propeller flange in accordance with applicable regulations. As required utilize one of the three possible pitch circle diameters (P.C.D) on the flange.

The propeller design must be certified in accordance with applicable regulations, such as FAR or EASA, by the aircraft manufacturer.

1.1) Technical data

Direction of rotation

See Fig. 1.

Direction of rotation of the propeller flange:

- left, counter clockwise, looking towards face of flange.

Graphic

Direction of rotation

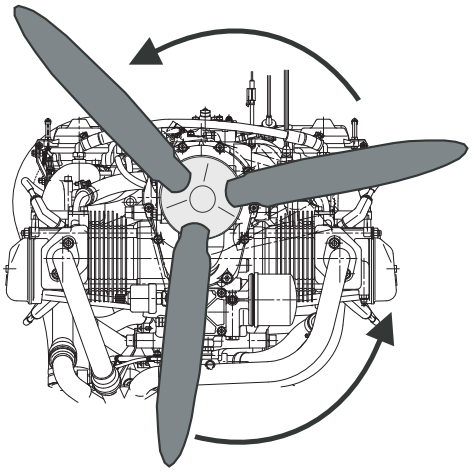

Fig. 1 08629

Transmission

Gear transmission:

- i= 2.2727 (50 **T**eeth/22 T)
- i= 2.4286 (51 **T**eeth/21 T)

Vibration analysis

NOTE: Vibration analysis of the whole system (engine, suspension, propeller etc.) should be carried out as part of the certification process.

If no limits are available in the technical literature, a max. of 1.0 IPS (inches per second) at 5000 rpm. can be assumed.

Propeller shaft flange

See Fig. 2.

Attachment of propeller on prop shaft flange:

Pitch circle diameter 75 mm (2.95 in.)	6x through holes 8 mm (0.31 in.)
Pitch circle diameter 80 mm (3.15 in.)	6x through holes 11.5 mm (0.45 in.)
Pitch circle diameter 101.6 mm (4“)	6x through holes 13 mm (0.51 in.)
Hub diameter	47 mm (1.85 in.)

Graphic

Propeller shaft flange

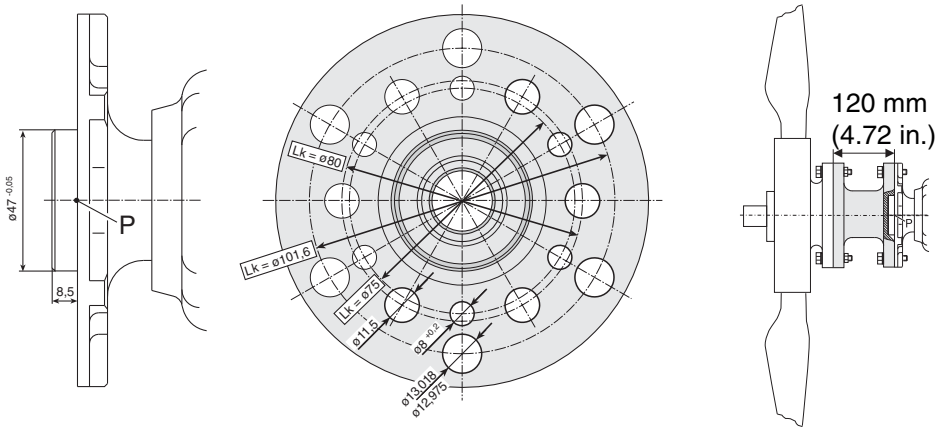

Fig. 2 *02581, 09193*

1.2) Operating limits

Torque

NOTICE Modification of the propeller shaft is not permitted.

Max. torque:

- ROTAX 912 A, F, UL for i=2.2727 — 238 Nm (176 ft.lb) (at propeller)
- ROTAX 912 A, F, UL for i=2.4286 — 255 Nm (188 ft.lb) (at propeller)
- ROTAX 912 S, ULS for i=2.4286 — 315 Nm (232 ft.lb) (at propeller)

Max. moment of inertia

Max. permissible moment of inertia on propeller:

- 6000 kg cm^2 (14.238 lb ft^2)
- Normal between 1500 kg cm^2 and 6000 kg cm^2 (3.559 lb ft^2 and 14.238 lb ft^2)

Extension of propeller shaft

- Max. extension of the propeller shaft: 120 mm (4.72 in.)

Out of balance

Dynamic balancing of the proppeller as specified by the propeller manufacturer must be carried out.

2) Vacuum pump

2.1) Technical data

General note

See Fig. 3.

NOTICE Certification to the latest requirements such as FAR or EASA has to be conducted by the aircraft manufacturer.

Drive

Drive via propeller gear.

- Location of the necessary connection (1) on the crankcase.

	Coordinates		
Connection	x-Axis mm	y-Axis mm	z-Axis mm
	-206.3 mm (-8.12 in.)	0	51.5 mm (2.03 in.)

Graphic

Attachment flange

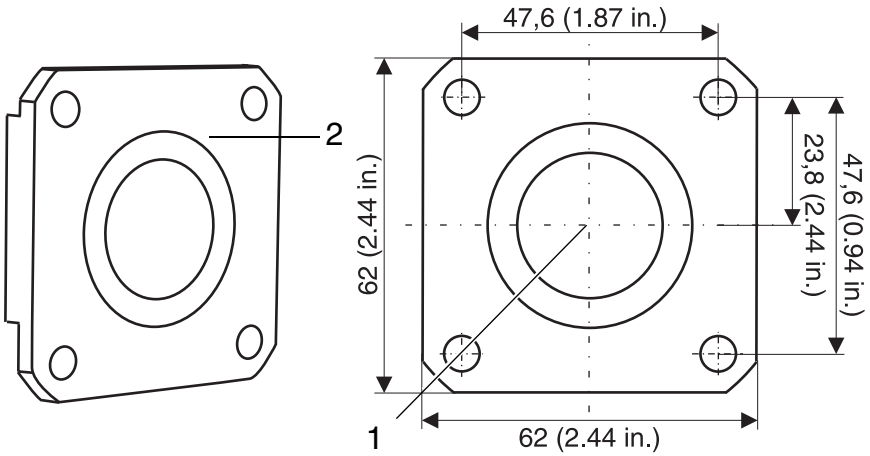

Part	Function
1	Connection for Vacuum pump
2	Attachment flange

Fig. 3 08322

Connection

NOTICE Pay attention to manufacturers specifications.

Speed reduction

NOTE: Speed reduction from crankshaft to hydraulic governor is 1.724 or 1.842, i.e. the vacuum pump runs with 0.58 or 0.54 of engine speed.

Connections

Thread size	M6
Effective thread length	Max. 17 mm (9/16“)
Governor drive	Internal spline 20/40 SMS 1834 NA 14x1.27x30x12
Power consumption	Max. 600 W

Graphic

Vacuum pump

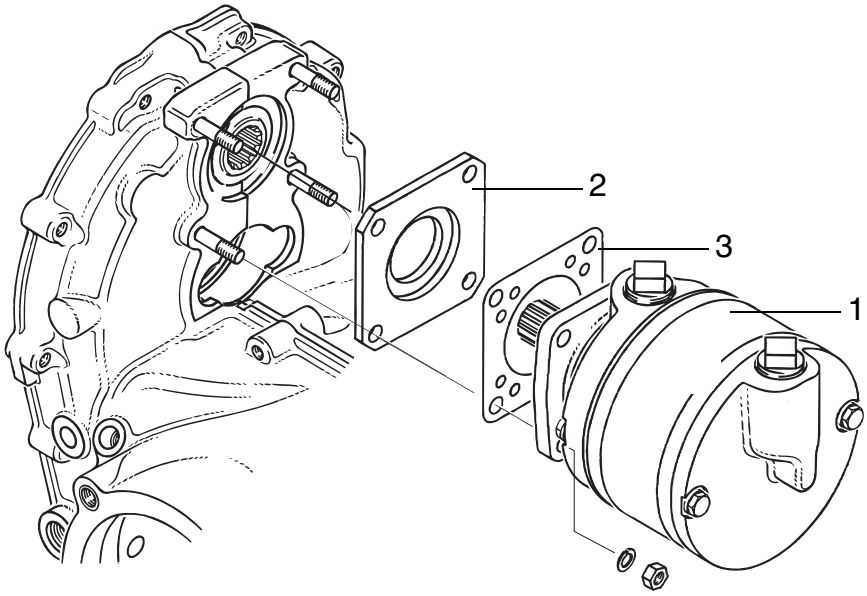

Part	Function
1	Vacuum pump
2	Attachment flange
3	Gasket

Fig. 4 *08328*

3) Hydraulic governor for constant speed propeller

3.1) Technical data for connections

General note

See Fig. 5.

NOTE: See therefore also SB-912-052 “Installation/Use of governors for ROTAX engine type 912 and 914“, latest issue.

Drive

Drive via propeller gearbox.

- Position of the propeller connection (1) on the governor flange

	Axes		
Point of support	x-Axis mm	y-Axis mm	z-Axis mm
	-206.3 mm (-8.12 in.)	0	51.5 mm (2.03 in.)

Graphic

Crankcase flange

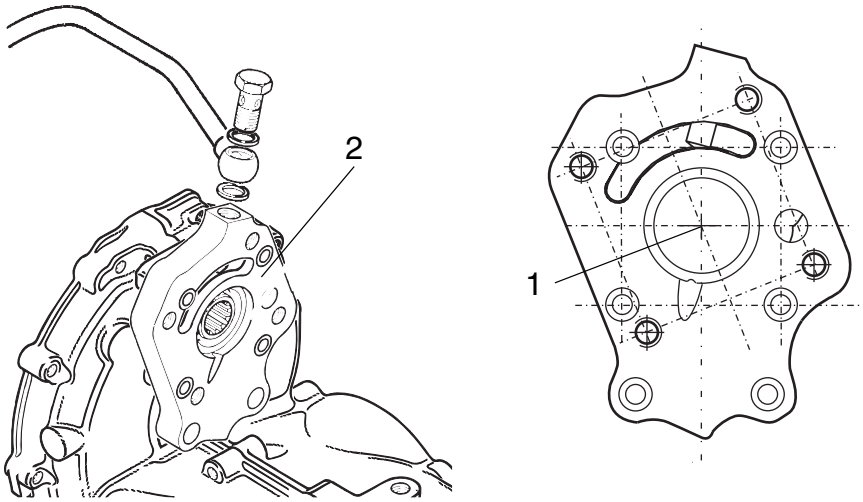

Part	Function
1	Connection for hydraulic governor
2	Governor flange

Fig. 5 *00256,07903*

Connections

NOTICE Pay attention to manufacturers specifications!

Gear ratio

NOTE: Gear ratio from crankshaft to hydraulic governor is 1.842, i.e. the propeller governor runs at 0.54 times engine speed.

Mounting pad	AND20010
Thread	M8
Thread length	Max. 14 mm (0.55 in.)
Governor drive	Internal spline 20/40 SMS 1834 NA 14x1.27x30x12
Power consumption	Max. 600 W
Operating pressure	Max. 30 bar (435 psi)

Chapter: 72-00-00

ENGINE

Introduction

NOTICE Certification in accordance with the latest regulations, such as FAR or EASA, must be carried out by the aircraft or fuselage manufacturer.

Table of contents

This section of the Installation Manual contains views of the aircraft engine, technical data and installation dimensions of the engine.

Subject	Page
Engine components, engine views, cylinder designation	Page 3
Side view	Page 4
Front view	Page 5
Top view	Page 6
Technical data	Page 7
Weight	Page 7
Installation dimensions	Page 8
Centre of gravity of engine and standard accessories	Page 8
Moments of inertia	Page 8
Operating limits	Page 9
Deviation from the apparent perpendicular	Page 9

Overview Engine

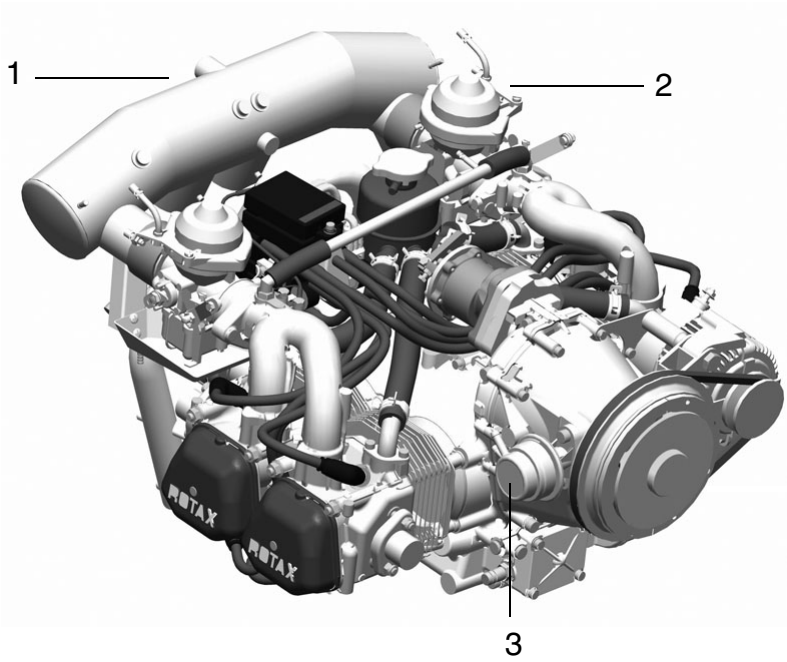

Part	Function
1	Airbox
2	Carburetor
3	Mechanical fuel pump

Fig. 1 *09170*

1) Engine components, engine views, cylinder designation and denomination of main axes

Regarding change of temperature sensor position, see Fig. 2 and Fig. 3.

NOTE: It is NOT mandatory to retrofit engines with the old cylinder heads. The different versions of the cylinder heads can be mixed installed, but make sure, if and at which position the cylinder head temperature and coolant temperature is measured. This also defines the naming of the indicating instrument with the appropriate temperature limit.

Suffix -01:

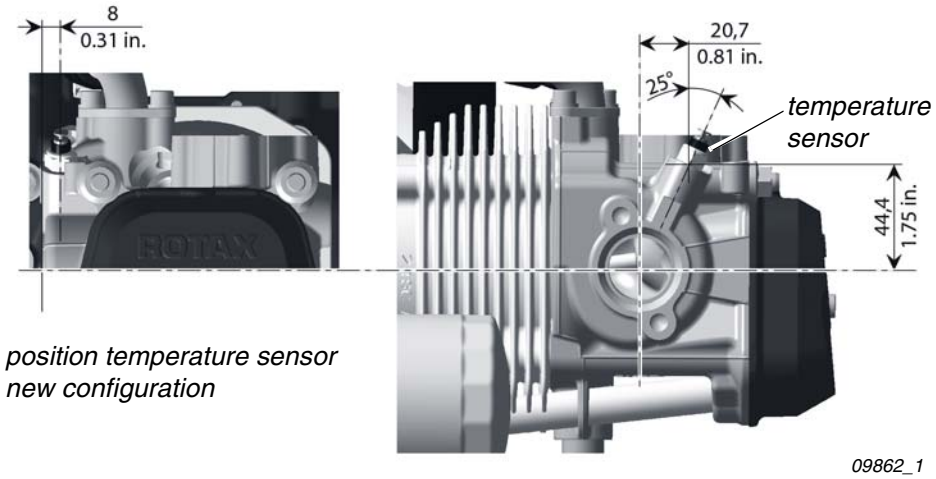

Fig. 2

without Suffix -01:

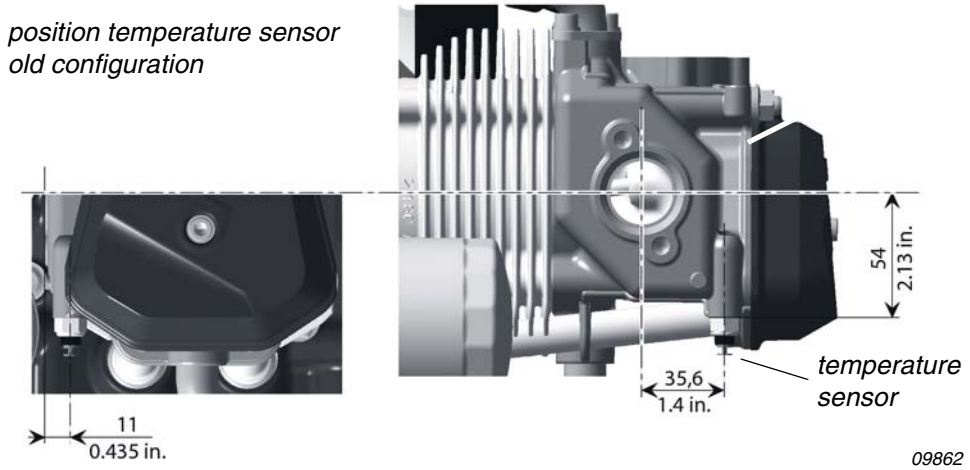

Fig. 3

General note

See Fig. 4.

PTO power take off side

MS magneto side

A points of attachment (for engine transport) - centre of gravity

P zero reference point for all dimensions

NOTE: Allow ± 1 mm on all stated dimensions as manufacturing tolerance.

x, **y**, **z** axes for system of coordinates

Cyl. 1 Cylinder 1 **Cyl. 3** Cylinder 3

Cyl. 2 Cylinder 2 **Cyl. 4** Cylinder 4

Side view

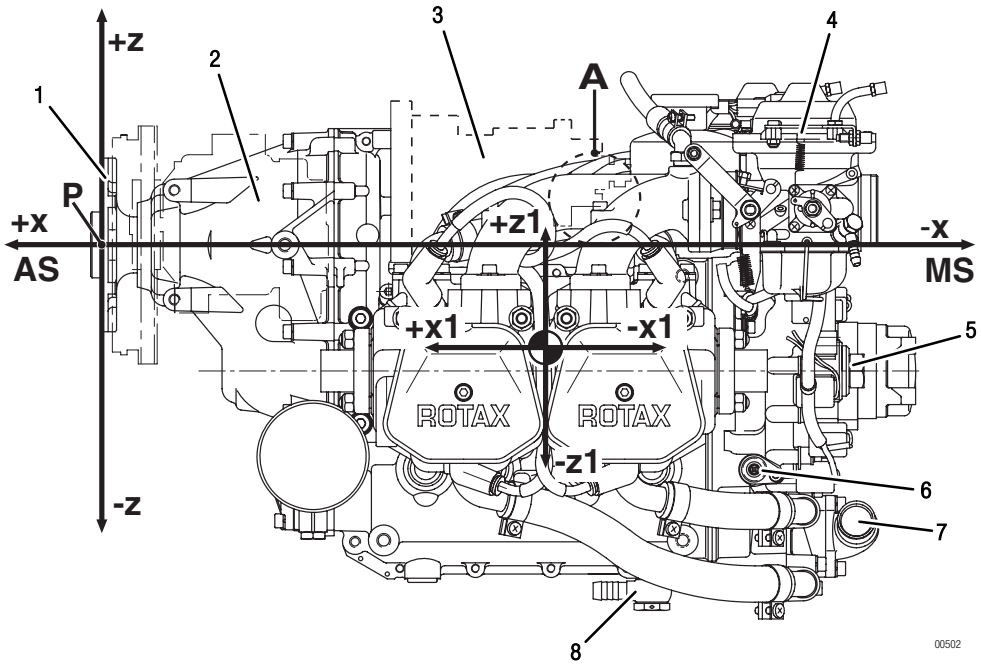

Part	Function
1	Propeller flange
2	Propeller gear
3	Vacuum pump or hydraulic governor for constant speed propeller
4	Constant depression carb
5	Ignition cover
6	Connection for mechanical rev counter
7	Coolant pump
8	Connection for oil return line

Fig. 4

00502_a

d06101.fm

Front view

WITHOUT SUFFIX -01:

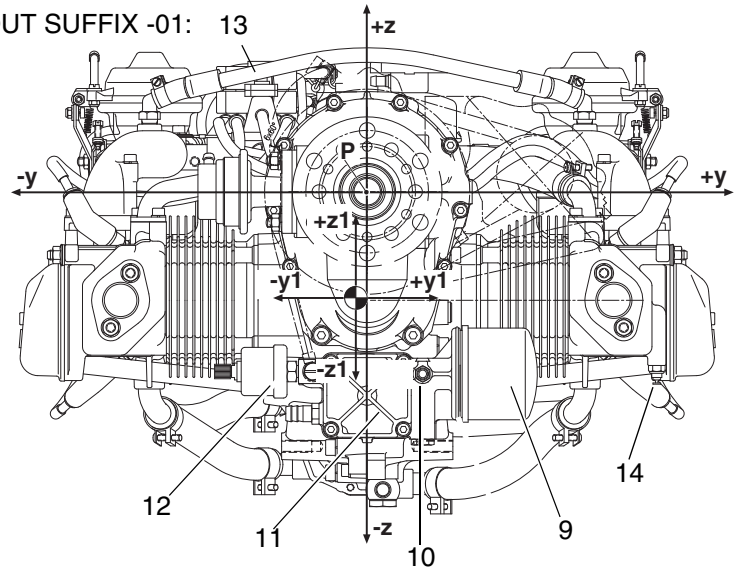

WITH SUFFIX -01:

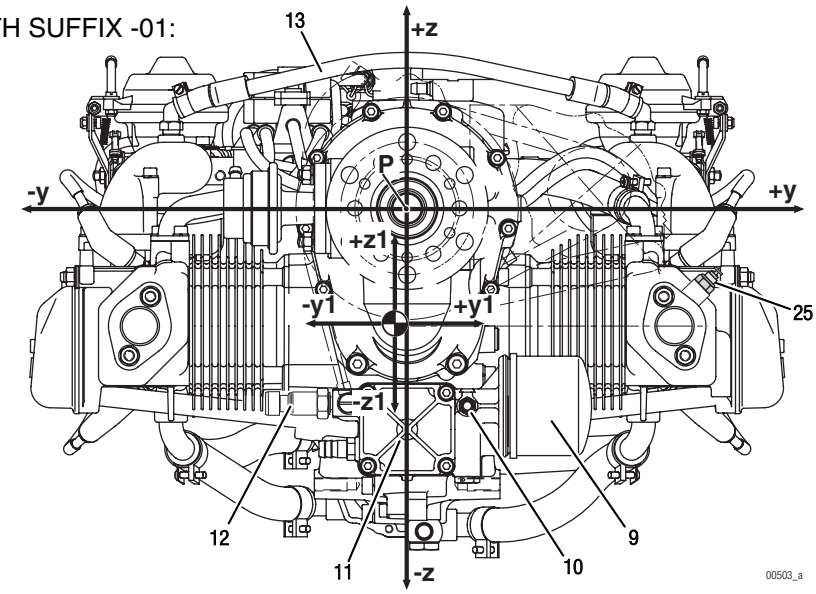

Part	Function
9	Oil filter
10	Sensor for oil temperature
11	Oil pump
12	Sensor for oil pressure
13	Compensation tube
14	Cylinder head temperature sensor
25	Coolant temperature sensor

Fig. 5

00503, 00503_a

Top view

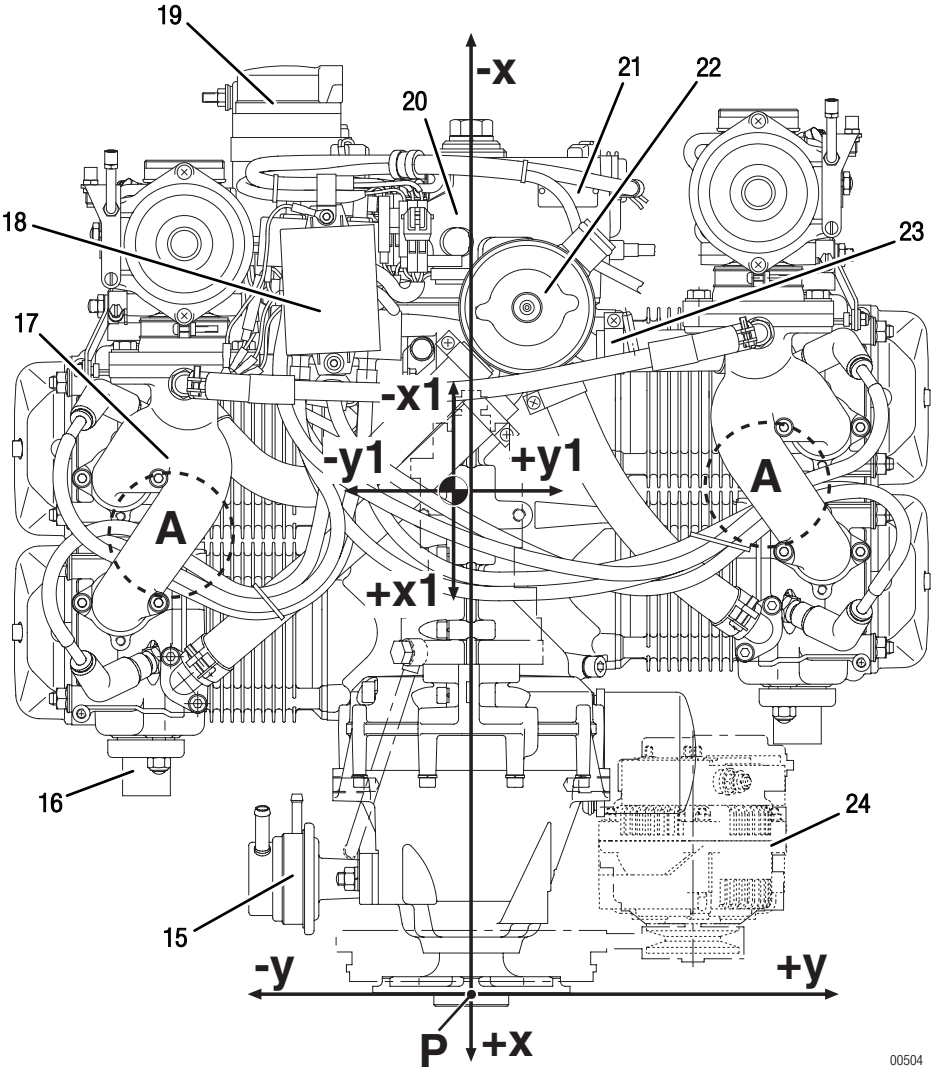

Part	Function
15	Mechanical fuel pump
16	Exhaust socket
17	Intake manifold
18	Electronic module
19	Electric starter
20	Ignition housing
21	Engine number
22	Expansion tank
23	Connection for manifold pressure
24	External alternator

Fig. 6

00504_a

d06101.fm

2) Technical data

General note

To maintain clarity, only data relevant for engine installation and operation will be stated in the Manual.

NOTE: Connecting sizes, capacities, gear and reduction ratios, electric power, permissible temperatures, etc. can be found in the respective section of engine installation or other relevant engine type documentation.

2.1) Weight

General note

The engine weight is defined by the following conditions:

- **Engine dry** from serial production with internal alternator, with overload clutch (see chapter Description of design).

Version

ROTAX 912 A, 912 F, 912 UL:

Version	Weight
Version 2 and 4	57.1 kg (125 lb)
Version 3	59.8 kg (132 lb)

ROTAX 912 S, 912 ULS:

Version	Weight
Version 2 and 4	58.3 kg (128 lb)
Version 3	61.0 kg (134 lb)

Accessories

Overview:

Accessories	Weight
External alternator assy.	3.0 kg (6.6 lb)
Overload clutch	1.7 kg (3.7 lb)
Vacuum pump assy.	0.8 kg (1.76 lb)
Hydraulic governor assy. incl. drive (depending on type)	approx. 2.2 (4.8 lb) to 2.7 kg (6 lb)
HD-starter	additional +0.43 kg (1 lb)
Rectifier regulator	0.3 kg (0.66 lb)
Starter relais	0.145 kg (0.32 lb)
Radiator	1.0 kg (2.2 lb)
Air guide hood	0.36 kg (0.79 lb)
Airbox	1.3 kg (2.8 lb)
2 air filter	0.3 kg (0.66 lb)
Oil radiator	0.55 kg (1.21 lb)

Accessories	Weight
Exhaust system	approx. 4.0 kg (8.8 lb)
Engine mount	2.0 kg (4.4 lb)

2.2) Installation dimensions

Standard engine version

See Fig. 5.

NOTE: All dimensions from zero reference points (P).

	Standard engine version		
	Pos. (+)	**Neg. (-)**	**Total**
max. dimension along x-axis (mm)	8.5 (0.33 in.)	-581 (-22.87 in.)	589.5 (23.21 in.)
max. dimension along y-axis (mm)	288 (11.34 in.)	-288 (-11.34 in.)	576 (22.68 in.)
max. dimension along z-axis (mm)	118 (4.65 in.)	-276 (-10.87 in.)	394 (15.51 in.)

2.3) Centre of gravity of engine and standard accessories

Centre of gravity

See Fig. 5.

NOTE: All dimensions from zero reference points (P).

	Standard engine version 3	External alternator	Hydraulic governor	Vacuum pump
centre of gravity on x-axis (mm)	-316 (-12.44 in.)	-100 (-3.94 in.)	-276 (-10.87 in.)	-255 (-10.04 in.)
centre of gravity on y-axis (mm)	-5 (-0.20 in.)	139 (5.47 in.)	0	0
centre of gravity on z-axis (mm)	-83 (-3.27 in.)	6 (0.24 in.)	56 (2.20 in.)	56 (2.20 in.)

2.4) Moments of inertia

Moments of inertia

See Fig. 5.

	Engine version 2/4	Engine version 3
moment of inertia around axis x1-x1 (kg cm^2)	11100 (26.341 lb ft^2)	11600 (27.527 lb ft^2)
moment of inertia around axis y1-y1 (kg cm^2)	10900 (25.866 lb ft^2)	11390 (27.029 lb ft^2)
moment of inertia around axis z1-z1 (kg cm^2)	17400 (41.291 lb ft^2)	18200 (43.190 lb ft^2)

3) Operating limits

Manuals

Documentation overview:

Operating limits	Manual
Engine speed	See Operators Manual 912 Series, chap. 2.1
Acceleration	See Operators Manual 912 Series, chap. 2.1
Oil pressure	See Operators Manual 912 Series, chap. 2.1
Oil temperature	See Operators Manual 912 Series, chap. 2.1
Cylinder head temperature	See Operators Manual 912 Series, chap. 2.1
Coolant temperature	See Operators Manual 912 Series, chap. 2.1
Exhaust gas temperature	See chap. 78-00-00 section: Operating limits.
Ambient temperature for start up	See Operators Manual 912 Series, chap. 2.1
Ambient temperature for electronic module	See chap. 24-00-00 section: Electronic module.
Fuel pressure	See Operators Manual 912 Series, chap. 2.1
Governor	See Operators Manual 912 Series, chap. 2.1
External alternator	See Operators Manual 912 Series, chap. 2.1
Deviation from the apparent perpendicular	See Operators Manual 912 Series, chap. 2.1

3.1) Deviation from the apparent perpendicular

General note

See Fig. 7.

The engine design is for a conventional, non-aerobatic, tractor or pusher configuration with the oil return port in the optimum position. Assuming these points are taken into consideration, the engine will be properly lubricated in all flight profiles.

Bank angle

The resulting bank angle β (depending on acceleration/deceleration) may never exceed the max. bank angle.

NOTE: Pitch or role angle α is not equal with β, except stabilized condition (without acceleration).

Graphic Bank angle

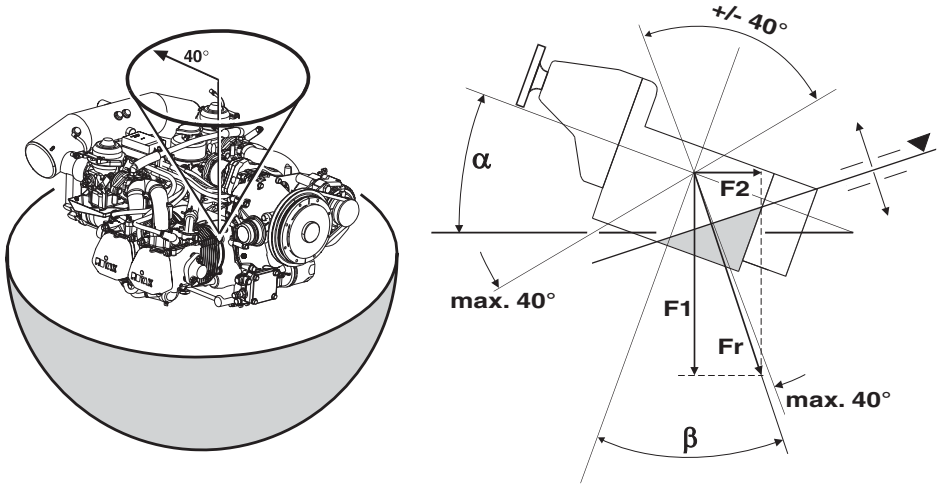

α	Bank or rotation	**F1**	Gravity
β	Bank angle	**F2**	Acceleration
		Fr	Result of F1 and F2

Fig. 7 *07191, 08325*

Chapter: 73-00-00

FUEL SYSTEM

Instruction

NOTICE The design of the fuel system is the responsibility of the aircraft manufacturer.
The fuel system must be designed to ensure that the engine is supplied with sufficient fuel at the correct pressure in every operational situation. Operating limits must be adhered to!

Table of contents

This section of the Installation Manual contains information on the aircraft engine fuel system.

Subject	Page
Fuel system	Page 3
Description of system	Page 3
Operating limits	Page 5
Fuel pressure	Page 5
Electrical fuel pump	Page 6
Requirements of the fuel system	Page 6
Connecting dimensions, location of joints and directives for installation	Page 7
Fuel manifold	Page 7
Fuel pump	Page 9
Check valve	Page 10
Carburetor	Page 11
Requirements on the carburetor	Page 11
Drainage piping on airbox and drip trays	Page 13
Drainage piping on carburetor	Page 14
Connections for Bowden cable actuation and permissible load	Page 15
Technical data	Page 15
Requirements on cable actuation	Page 17
Requirements on the throttle lever	Page 18
Air intake system	Page 21
Operating limits	Page 21
Requirements on the air intake system	Page 22
Air intake socket for fresh air or pre-heated air	Page 22
Requirements on the intake air ducting	Page 23
Airfilter	Page 23
Airbox	Page 23
Technical data	Page 25
Data for optional components of air intake system	Page 27

Overview Fuel system

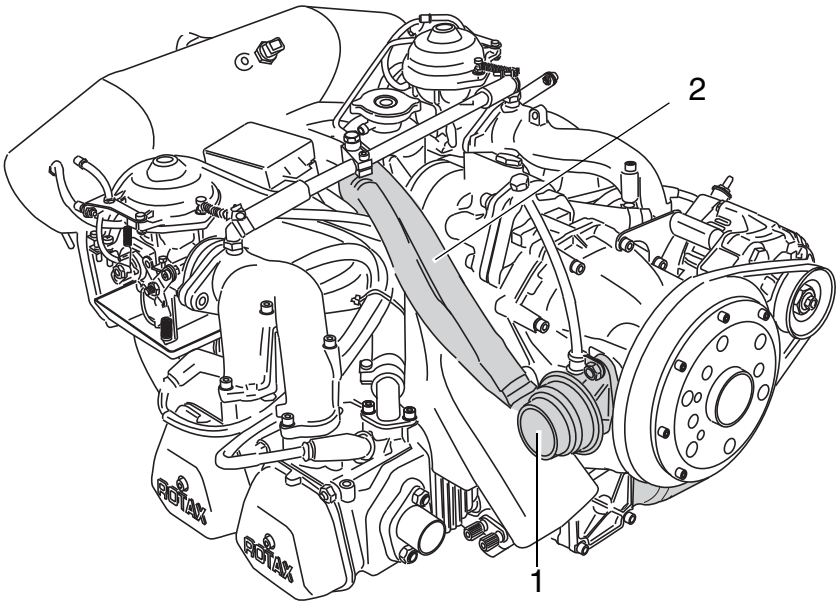

Part	Function
1	Fuel pump
2	Fuel hose assy.

Fig. 1 *08825*

1) Fuel system

1.1) Description of system

General note

See Fig. 2.

NOTE: The fuel system from tank to the inlet of engine-driven fuel pump has to be installed by the aircraft manufacturer.

Fuel

The fuel flows from the tank (1) via a coarse filter and fire cock (3) continue to water trap/fine (4) to the mechanical fuel pump (5), from the pumps fuel passes on via the fuel manifold (6) to the two carburetors.

Fuel lines

Depending on the configuration of the engine the fuel lines from fuel pump to the carburetors are already installed by the manufacturer (optional on some engine).

Only the following connections per Fig. 2 have to be established:

- Feeding lines to suction side of the mechanical fuel pump (5).
- Lines from pressure side of the mechanical fuel pump to inlet of fuel manifold (6).
- Returnline from fuel pressure control to fuel tank.

Return line

Via the return line (5) surplus fuel flows back to the fuel tank and suction side of fuel system.

NOTE: The return line prevents malfunctions caused by the formation of vapor lock.

Components

The fuel system includes the following items:

- Tank
- Coarse filter
- Fine filter/water trap
- Fuel shut off valve
- Electrical fuel pump
- Manometer
- Return line from engine to tank (with integrated adapter sleeve)

as well as the required fuel lines and connections.

Graphic Fuel system

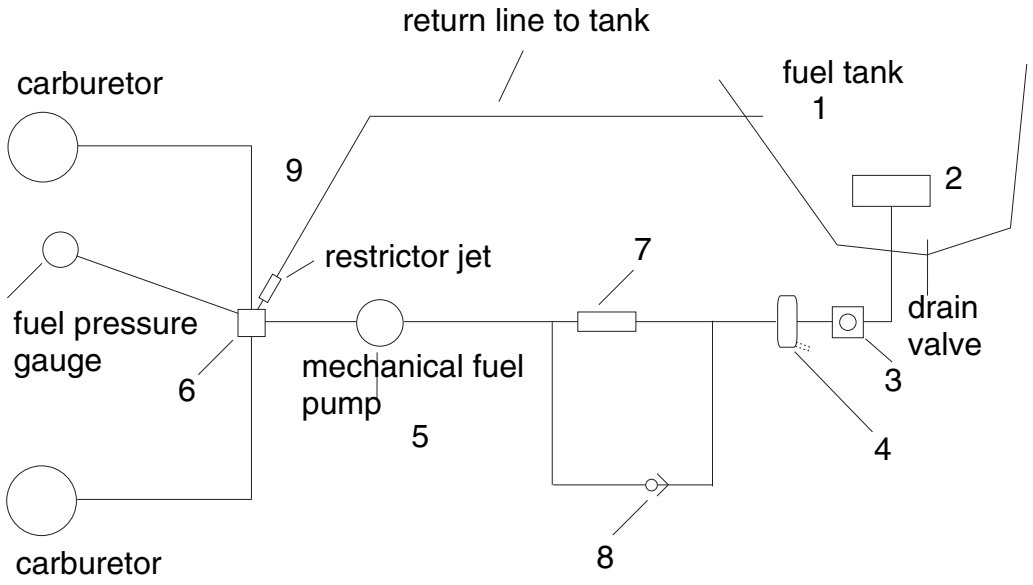

Part	Function
1	Fuel tank
2	Coarse filter
3	Fire cock
4	Fine filter/water trap
5	Mechanical fuel pump*
6	Fuel pressure control*
7	Electrical fuel pump
8	1x check valve
9	Return line from engine to tank (with integrated adapter sleeve)
	* Standard version

Fig. 2 07306

1.2) Operating limits

General note

NOTICE The design and layout of the entire fuel system must ensure engine operation within the specified operating limits.

See 912 Series Operators Manual, section 2.1) Operating Limits.

1.2.1) Fuel pressure

General note

See Fig. 3.

⚠ WARNING Non-compliance can result in serious injuries or death! Fuel pressure in excess of stated limit can lead to an override of the float valve with subsequent engine stop.

NOTE: Readings of the fuel pressure are taken at the pressure gauge connection on the fuel distributor piece (standard for ROTAX 912 F and 912 S, optional for other series).

Operating limits

Fuel pressure:

Max.	0.4 bar (5.8 psi) (0.5 bar (7.26 psi))*
Min.	0.15 bar (2.2 psi)

* applicable only for fuel pump from S/N 11.0036.

Graphic

Fuel pressure

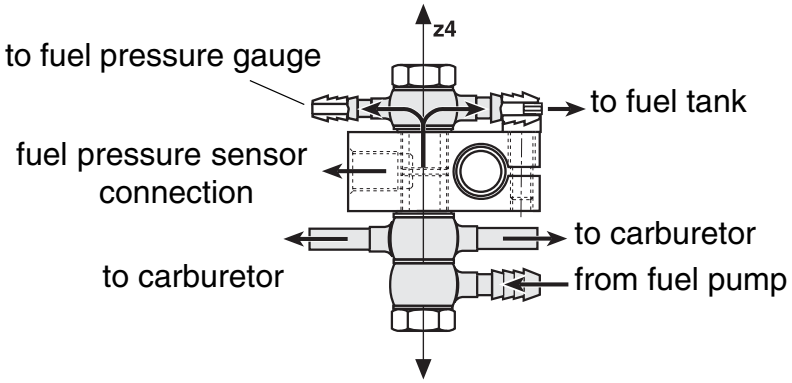

Fig. 3 09139

d06102.fm

1.2.2) Electrical fuel pump

General note

The engine manufacturer requests the use of an electrical auxiliary fuel pump.

The electrical auxiliary fuel pump is not just required in case of a malfunction or defect of the mechanical fuel pump, but also provides required fuel supply e.g. in case of vapour formation at high altitudes and temperatures.

Operating limits

NOTE: If an electrical auxiliary fuel pump is installed, the whole fuel system has to be designed to warrant engine operation within the specified pressure limits.

NOTICE The fuel pressure of an additional auxiliary fuel pump should not exceed 0.3 bar (4.4 psi).

1.3) Requirements of the fuel system

Delivery rate

Electric or mechanical fuel pump:

- Min. 35 l/h (8.2 US gal/h).

Fuel lines

See Fig. 2.

NOTICE Fuel lines have to be established to the latest requirements such as FAR or EASA by the aircraft manufacturer.

NOTICE For prevention of vapour locks, all the fuel lines on the suction side of the fuel pump have to be insulated against heat in the engine compartment and routed at distance from hot engine components, without kinks and protected appropriately.

At very critical conditions e.g. problems with vapour formation the fuel lines could be routed in a hose with cold air flow.

Secure fuel hoses with suitable screw clamps or by crimp connection.

Fuel return line

NOTICE The installation of a fuel return line is mandatory.
If the fuel distributor piece with regulator from ROTAX is not available, the fuel pressure must be regulated by a restriction in the fuel return line, which ensures that the fuel pressure is under all operating conditions within the operating limits specified by ROTAX.

Fuel filter

See Fig. 2.

Fuel filter	
Coarse filter	On fuel tank as per valid certification.
Fine filter	In the feed line from tank to the fuel pumps an additional fine filter with **meshsize** 0.1 mm (.004 in.) has to be provided. The filter has to be controllable for service. A combination of filter/water-trap (gascolator) is recommended.

Water trap

A suitable water trap must be installed at the lowest point of the fuel feed line.

Fuel temperature

To avoid vapour locks keep the temperature of the fuel lines, float chamber and related deviced below 45 °C (113 °F).

If you should encounter problems in this respect during the test period, than the affected components such as the supply line to the fuel pumps have to be cooled.

1.4) Connecting dimensions, location of joints and directives for installation

1.4.1) Fuel manifold

Return line

See Fig. 4.

Return line (1) to tank:

Outside dia.	7 mm (.28 in.)
Slip-on length	Max. 17 mm (.67 in.)

Pressure gauge

Pressure gauge connection (2):

Outside dia.	6 mm (.24 in.)
Slip-on length	Max. 17 mm (.67 in.)

Fuel pressure switch

Fuel pressure switch connection (3):

Thread	M10
Thread length	Max. 9 mm (.35 in.)
Tightening torque	15 Nm (135 in.lb) und LOCTITE 221

Banjo bolt

NOTICE At loosening or tightening of the banjo bolt (4) (tightening torque 10 Nm = 90 in.lb) support the fuel manifold appropriately.

Connection nipple

NOTE: The connection nipple (5) is furnished with an orifice (6) essential for operation of the fuel system.

If the pressure gauge connection (2) is not used and a hose nipple (7) installed, the banjo bolt assy. (4) marked with a color dot or marked “FUEL“ is furnished with an orifice (8). This is essential for operation of the fuel system as it prevent a loss in fuel pressure.

Coordinates

Position of z4 axis of the fuel manifold:

NOTE: Dimensions always from point of reference (P).

	Coordinates [mm]		
	x-axis	**y-axis**	**z-axis**
Fuel distributor piece	-385.0 mm (-15.16 in.)	-50.0 mm (-1.97 in.)	approx 110 mm (4.33 in.)

Graphic

Fuel manifold

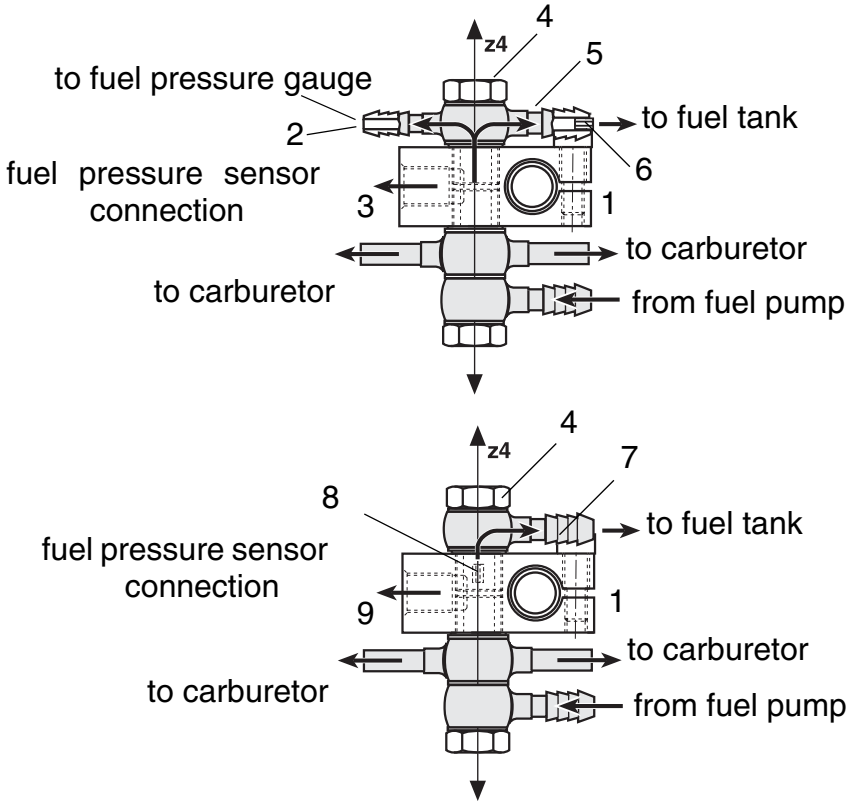

Part	Function
1	Fuel manifold
2	Pressure gauge connection
3	Fuel pressure switch connection
4	Banjo bolt

d06102.fm

Part	Function
5	Connection nipple
6	Orifice (0.35 mm = 0.014 in.)
7	Hose nipple
8	Orifice (0.35 mm = 0.014 in.)

Fig. 4 *09192,09139*

1.4.2) Fuel pump

General note

See also page 10A.

NOTICE Ensure at installation of the supply line to fuel pump that no additional moments or load will rest on the pump!

NOTICE Utilize max. slip on length. Secure hoses with suitable screw clamps or crimp.

Slip-on joint

Hose connection on fuel pump (1) inlet by slip-on joint.

Fuel intake connection (2):

Outside dia.	8 mm (.32 in.)
Slip-on length	Max. 22 mm (.87 in.)

Fuel outlet connection (3):

Outside dia.	6 mm (.24 in.)
Slip-on length	Max. 22 mm (.87 in.)

Drainage (4):

Outside dia.	6 mm (.24 in.)
Slip-on length	Max. 22 mm (.87 in.)

Fig. 5.1

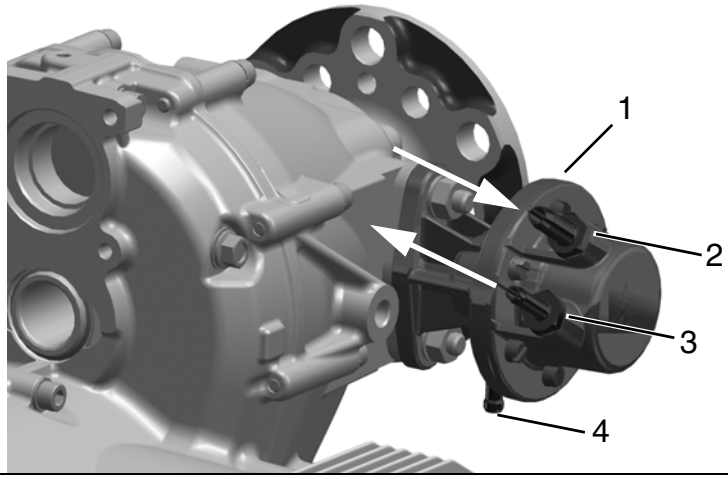

08829

Sleeved lines

Hose connection on fuel pump (1) supplied with fire sleeved lines.

Fuel intake connection (2):

Fitting (5)	9/16-18 UNF (AN-6)
Tightening torque	15 Nm (135 in.lb)

Fuel outlet connection (3):

Hose nipple (6)	3/4 DIN 7642
Tightening torque	15 Nm (135 in.lb)

Drainage (4):

Outside dia.	6 mm (.24 in.)
Slip-on length	Max. 22 mm (.87 in.)

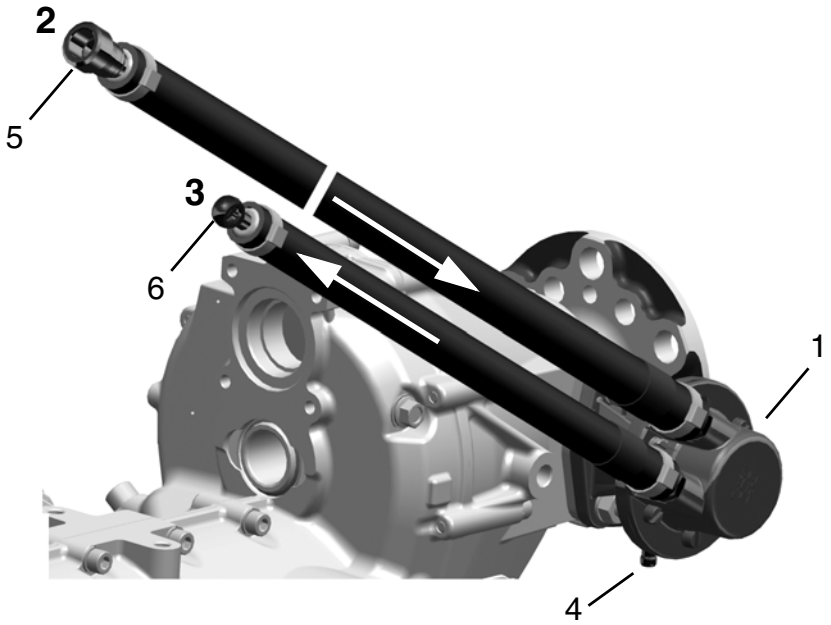

Fig. 5.2 *08831*

1.4.3) Check valve

Specification

Opening pressure	0.1 bar - 0.15 bar (1.5 psi. - 2.2 psi.)
Permitted pressure in reverse-biasing	2 bar (29 psi.)
Burst pressure	5 bar (72.5 psi.)

Grafik

Fuel pump

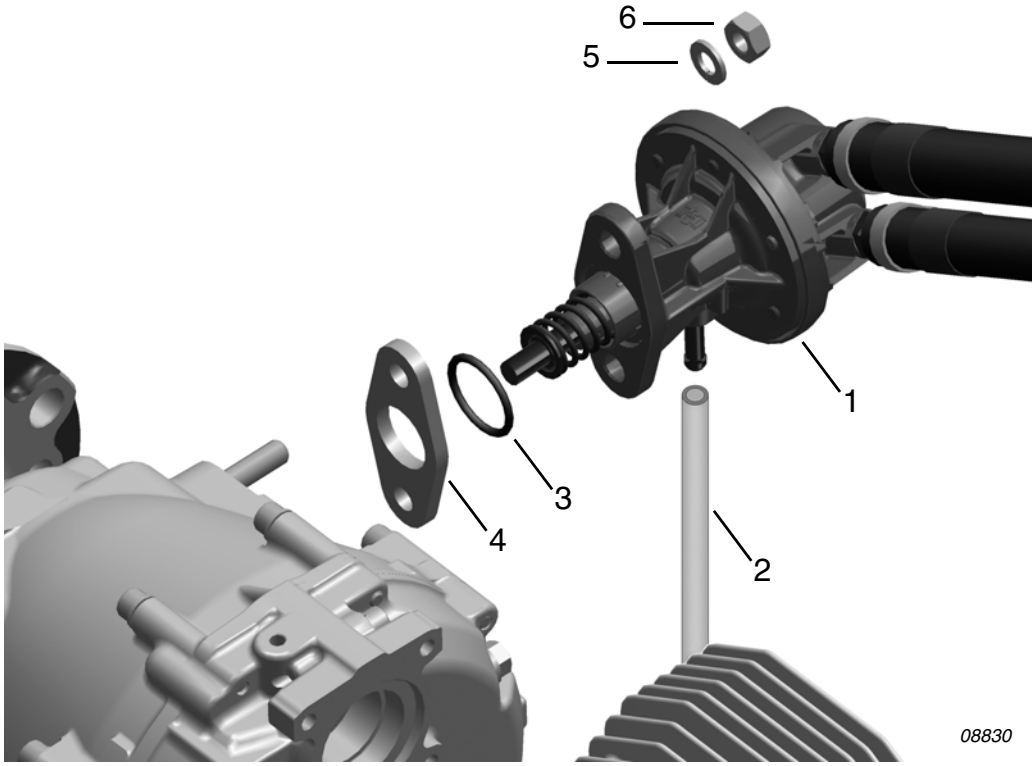

Part	Function
1	Fuel pump
2	Drainage hose
3	O-ring
4	Insulating flange (gasket)
5	Lock washer A8
6	Hex. nut M8

ACHTUNG Route the lines without kinks and avoid tight bends.

ACHTUNG Drainage line have to be routed into a ram-air and vacuum free zone, according to the requirements and release of BRP-Powertrain. The drainage line must not be routed into the slipstream. Ram pressure or vacuum impair the fuel pressure

- The lines have to be routed such that in case of damage the surplus of fuel/oil is drained off suitably.
- Route the lines with a continuous decline.
- The lines have to be protected against any kind of blockage e.g. by formation of ice.

NOTES

2) Carburetor

General note

See Fig. 6.

⚠ WARNING

Non-compliance can result in serious injuries or death! The carburetor flange assembly has to carry the weight of the carburetor and intake system. Ensure that the screw of the clamp is positioned on the underside as supplied and the gap between the clamp plates is 8 mm (.31 in.).

The carburetors on the standard engine are already attached by a flexible flange (and connecting hoses on the airbox). Only connections of the Bowden cable for preheating, choke and throttle have to be established.

It is recommended, to make the adjustment of the Bowden cable after engine installation has been completed, to ensure exact final adjustment.

Graphic

Carburetor socket

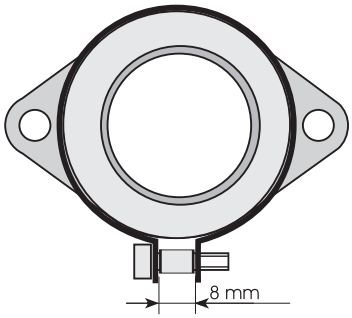

Fig. 6 *05794*

2.1) Requirements on the carburetor

General note

See Fig. 7.

⚠ WARNING

Non-compliance can result in serious injuries or death! In the area of the float chamber the temperature limit of the fuel must not be exceeded.

If necessary install additional insulation or heat shields. Certification to the latest requirements such as FAR or EASA has to be conducted by the aircraft manufacturer.

NOTICE The float chamber venting lines (1) lines have to be routed into a ram-air and vacuum free zone or into the airbox, according to the requirements and release of BRP-Powertrain. See chapter “air intake system“. These lines must not be routed into the slipstream or down the firewall.

NOTICE Pressure differences between intake pressure and pressure in the carburetor chambers may lead to engine malfuction due to incorrect fuel supply.

Drip tray

The carburetors are positioned above the exhaust sockets. Below the carburetors one each drip tray (2) with a draining connection (3) is fitted which serves as a heat shield as well.

Graphic

Drip tray and draining connection

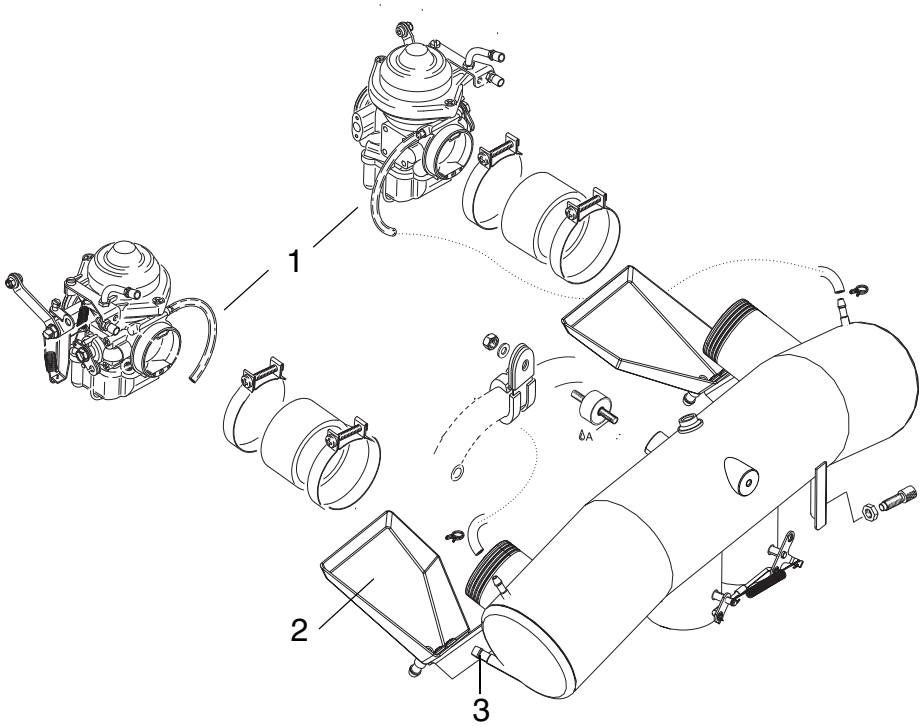

Part	Function
1	Float chamber venting lines
2	Drip tray
3	Draining connection

Fig. 7

08644

d06102.fm

2.1.1) Drainage piping on airbox and drip trays

General note

See Fig. 7

⚠ WARNING Non-compliance can result in serious injuries or death! Connect drainage lines, otherwise emerging fuel from a possible leakage could drip onto the exhaust system. RISK OF FIRE!

Drainage piping

Requirements on the drainage piping:

NOTICE With closed or blocked leakage piping, fuel could end up on exhaust system. RISK OF FIRE!

- The lines have to be routed such that in case of damage the surplus fuel is drained off suitably.
- Route the lines without kinks and avoid tight bends.
- Route the lines with a continuous decline.
- The lines have to be protected against any kind of blockage e.g. by formation of ice.

Float chamber venting lines

Float chamber venting lines:

NOTICE The float chamber venting lines (1) have to be routed into a ram-air and vacuum free zone or into the airbox, according to the requirements and release of BRP-Powertrain. See chapter “air intake system“. These lines must not be routed into the slipstream or down the firewall.
Pressure differences between intake pressure and pressure in the carburetor chambers may lead to engine malfunction due to incorrect fuel supply.

Connecting nipple for leakage line

Connecting nipple (3) for leakage line:

Outside dia.	6 mm (1/4“‘)
Slip on length	Max. 17 mm (11/16“)

2.1.2) Drainage piping on carburetor

General note

⚠WARNING Non-compliance can result in serious injuries or death! Connect drainage lines, otherwise emerging fuel from a possible leakage could drip onto the exhaust system. RISK OF FIRE!

The primary function of the carburetor float chamber venting lines, is to provide ambient air pressure to the float bowl chambers. However, it is possible for fuel to be expelled from these lines. Normally these lines are connected to fitting on the ROTAX airbox to provide the ideal ambient air pressure and away of draining any expelled fuel overboard.

Drainage piping

If an airbox is not installed, the vent lines will need to be routed according to the following instructions:

- The lines have to be routed such that in case of fuel being expelled it is drained off suitably.
- Route the lines without kinks and avoid tight bends.
- Route the lines with a continuous decline.
- The lines have to be protected against any kind of blockage e.g. by formation of ice.

NOTICE The carburetor float chamber venting lines have to be routed into a ram-air and vacuum free zone (or into the airbox, according to the release of BRP-Powertrain. These lines must not be routed into the slipstream or any other location that is subject to ram-air or vacuum during flight or ground operations.
Pressure differences between intake pressure in the carburetor float chamber may lead to engine malfunction due to incorrect fuel supply.

2.2) Connections for Bowden cable actuation and permissible load

General note

See Fig. 8.

NOTICE The specified permissible loads must never be exceeded!

2.2.1) Technical data

Coordinates P1

Centre position of carburetor socket (P1) of the respective carburetor:

	Coordinates P1 [mm]		
Carburetor for	**x-axis**	**y-axis**	**z-axis**
Cylinder 1/3	-521 mm (-20.52 in.)	-180 mm (-7.1 in.)	25 mm (0.988 in.)
Cylinder 2/4	-553 mm (-21.772 in.)	180 mm (7.1 in.)	25 mm (0.988 in.)

Reference point P2

Limit load on point of reference P2:

	Reference point P2
Max. allowable forces (limit load) in (N) in x, y and z-axis	60 N (44 ft.lb)
Max. allowable bending moments (limit load) in (Nm) in x, y and z-axis	4 Nm (3.32 lb ft)

Connection

Connection (1) for air filter or intake silencer:

Outside dia.	50 mm (2 in.)
Slip-on length	12 mm (.47 in.)

Connection (2) for throttle actuation:

Connection on throttle lever	Set screw M5x12
Tightening torque	4 Nm (3.32 lb ft) (suitable for 1.5 mm (.06 in.) steel wire).
Action travel	65 mm (2.56 in.)
Actuating force	Min. 1.5 N (.3 lb) Max. 8 N (1.8 lb)
Limit load	20 N (4.5 lb-force)

NOTE: Throttle opens by spring.

Graphic Coordinates P1 and Reference point P2

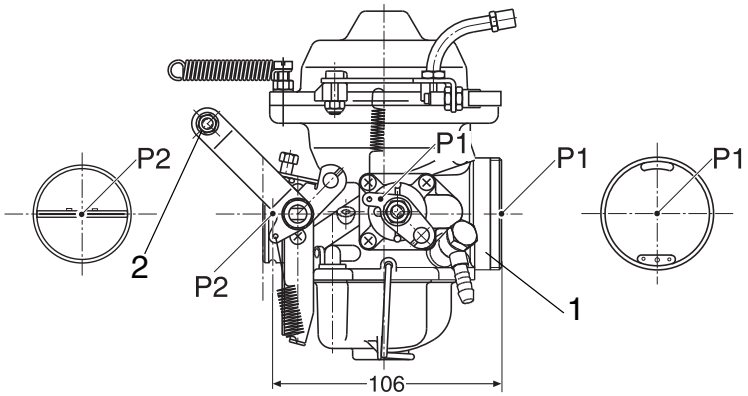

Part	Function
1	Connection for air filter or intake silencer
2	Connection for throttle actuation

Fig. 8 *08339*

Starting carb See Fig. 9.

Connection for starting carb (choke) actuation (1):

Connection on choke lever	Clamping nippel 6 (suitable for 1.5 mm (.06 in.) steel wire).
Action travel	23 mm (15/16“)
Actuating force	Min. 10 N (2.2 lb) Max. 45 N (10 lb)
Limit load	100 N (22 lb)

Directive for choke actuation:

The choke shaft (1) is marked (2). This mark has to point towards cable engagement (3).

Graphic Choke actuation

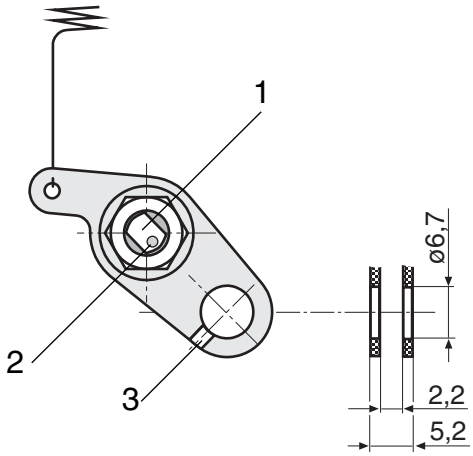

Part	Function
1	Choke shaft
2	Marking
3	Cable engagement

Fig. 9 *00541*

2.3) Requirements on cable actuation

General note See Fig. 10.

⚠ WARNING Non-compliance can result in serious injuries or death!
With throttle lever not connected the throttle valve will remain fully open.
The starting position of the throttle valve is therefore full throttle!
Therefore never start the engine without connecting the throttle lever first.

⚠ WARNING Non-compliance can result in serious injuries or death!
The cable actuations being used must not be affected at all by vibrations emanating from the engine or the airframe.

Bowden cable The two throttles have to be controlled by two separate Bowden cables working synchronously.

Adjust the cables to a free travel of 1 mm (.04 in.).

Graphic Cable actuation

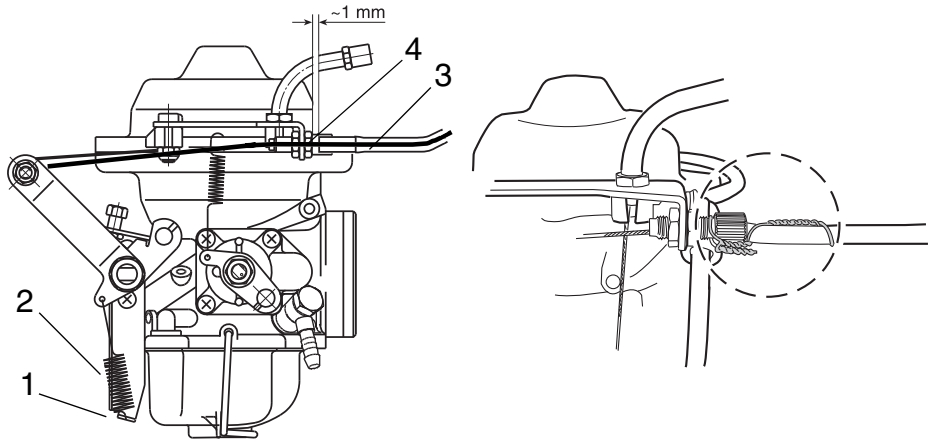

Part	Function
1	Lever flap
2	Return spring
3	Cable sleeves
4	Adjustment screws

Fig. 10 *08338,08354*

⚠ WARNING Adjust Bowden cable such that throttle and choke can be fully opened and closed.
Use Bowden cable with minimized friction so that the spring on the throttle can open the throttle completely. Otherwise increase pretension of spring by bending lever flap (1) or fit a stronger return spring, (2) or a cable with pull-push action would have to be used.
Secure the bowden cable sleeves (3) in the adjustment screws (4) (e.g. safety wire).

2.4) Requirements on the throttle lever

Mechanical stops See Fig. 11.

Adjustable positive stops for idle- and full throttle position are of course required.

These stops have to be designed such to render adjustibility and to prevent overload of the idle stop on the carburetor.

Graphic The sketch depicts a feasible arrangement.

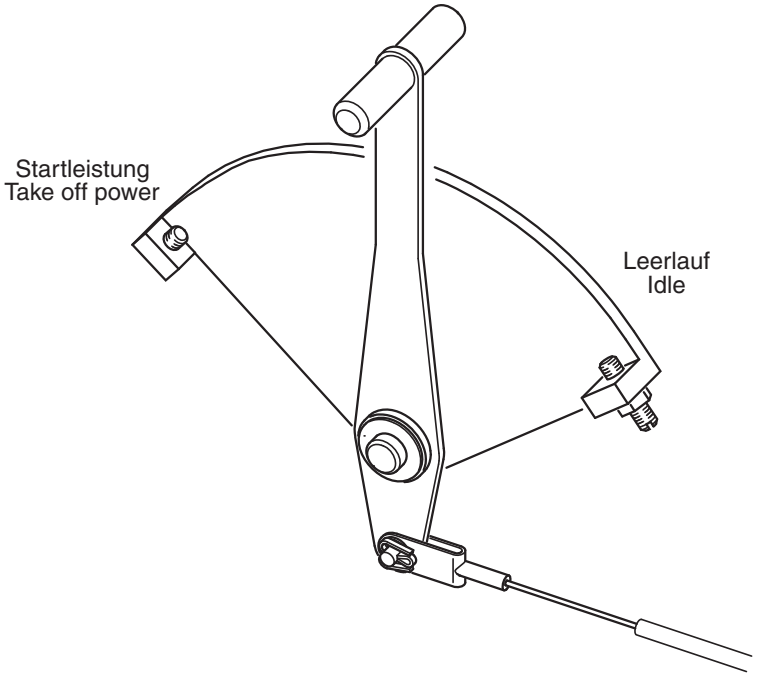

Fig. 11 *09137*

NOTES

3) Air intake system

General note

See Fig. 12.

NOTICE The performance is given at ISA (15 °C) (59 °F) condition only. Engine is equipped with unchanged GENUINE-ROTAX tuned exhaust muffler system and air intake box.

The intake system is determined essentially by the demands of engine and of the acceptable noise emission on the intake side. An airbox can be supplied by BRP-Powertrain as an option.

Performance data as specified and limits of operation can only be warranted by employment of the GENUINE-ROTAX airbox.

Installation note

If it will be necessary to use a different airbox or a modified genuine ROTAX airbox for reasons of installation the certification to the latest requirements such as FAR and EASA has to be conducted by the aircraft manufacturer.

Airbox retrofitted

NOTE: If an airbox or GENUINE-ROTAX airbox is retrofitted at a ROTAX 912 (A, F, UL) Series, a change in the carb jetting is required. See Illustrated Part Catalog 912/914 chapter 22 and/or SB-912-044 “Use of the ROTAX supplied airbox“, latest issue.

3.1) Operating limits

Fuel-mixture distribution

Fuel-mixture distribution:

Low (cold) air temperature in the airbox is favourable for engine performance and to reduce knocking tendency at combustion.

The certification to the latest requirements such as FAR and EASA has to be conducted by the aircraft manfacturer.

NOTICE Any changes on the air intake system (e.g. modification on the airbox etc.) can affect the flow rate in the air intake system and fuel mixture ratio. In the course of certification the fuel mixture process must be proofed by a CO-measurement.

CO-Measurement

CO-Measurement for configuration with not GENUINE-ROTAX airbox:

CO-Measurement
912 (A, F, UL) Min. 2 % CO. 912 (S, ULS) Min. 3.0 % CO (wide open throttle (WOT); a speed of min. 5200 1/min needs to be achieved).

Measurement in original configuration of aircraft e.g. with installed cowling.

Measured on each single cylinder. Measuring point is the same as the EGT-measurement. See chap. 78-00-00 section: Exhaust system.

3.2) Requirements on the air intake system

General note

⚠ WARNING Non-compliance can result in serious injuries or death!
Carb icing is a common reason for engine trouble. No implements are included in the supply volume for preheating of the intake air.
If an non GENUINE-ROTAX airbox is used provisions for preheating the intake air have to be made to prevent formation of ice in the intake system.
Preheating of the intake air will result in performance loss because of the lower air density.

NOTICE The certification to the latest requirements such as FAR and EASA has to be conducted by the aircraft manufacturer.

NOTICE All components of the air intake have to be secured against loss.

3.2.1) Air intake socket for fresh air or pre-heated (intake side)

General note See Fig. 12.

NOTICE Utilize the full slip-on length on all connections. Secure hoses by suitable spring type clamps or screw clamps.

Air intake socket

Air intake socket (1):

Outside dia. Ø	60 mm (2 3/8“)
Slip-on length	Max. 25 mm (1“)

3.2.2) Requirements on the intake air ducting

Technical data

High engine performance needs air temperature as low as possible at air intake. Therefore the air filter should be located in a recess of the engine cowling or separated from warm air by baffles such that fresh air can be aspirated.

Max. length of ducting	500 mm (20 in.)
Inside dia.	Min. inside dia. at least outside dia. of the intake socket on airbox.
Min. mean bending radius	100 mm (4“)

3.2.3) Airfilter

General note

BRP-Powertrain offers an air filter as described below.

⚠ WARNING

Non-compliance can result in serious injuries or death!
Use only filter elements which will not tend to restrict the flow when in contact with water.

NOTICE

The certification to the latest requirements such as FAR and EASA has to be conducted by the aircraft manufacturer.

NOTICE

A minimum flow rate of 220 m^3/h (260 yd^3/h) has to be warranted for all conditions.
The pressure loss must not exceed 2 hPa.

Choice of a suitable filter

The following points should assist the aircraft manufacturer at the choice of a suitable filter:

- four fold cotton fabric
- surface covered with metal screen
- total filter area at least 1400 cm^2 (217 in^2)
- a min. flow rate of 6.23 m^3/min (220 yd^3/h)

3.2.4) Airbox

General note

- Volume at least 2.5 Liter (.66 US gal)
- Outline dimension see Fig. 12.

The airbox is furnished with 2 drain holes (2) at the lowest position possible.

The holes are necessary to drain fuel from flooding float chambers caused by badly closing float valve.

Drainage lines:

⚠ WARNING Non-compliance can result in serious injuries or death!
Connect draining lines without fail, otherwise emerging fuel could drip onto the exhaust system. RISK OF FIRE!

Requirements

Observe the following requirements!

NOTICE With closed or blocked drainage bores fuel could flow into combustion chamber, possibly ruining the engine by hydraulic lock or emerging fuel could drip onto the exhaust system. RISK OF FIRE!

Step	Procedure
1	The lines have to be routed such that in case of damage the surplus fuel is drained away suitably.
2	Route the lines without kinks and avoid narrow bends.
3	Route the lines with a continuous decline.
4	The lines have to be protected against any kind of blockage e.g. by formation of ice.

NOTICE The drainage lines (2) have to be routed into a ram-air and vacuum free or into the airbox, according to the requirements and release of BRP-Powertrain. See also chap. Carburetor. These lines must not be routed into the slipstream. If the drainage lines of the airbox are connected with the drainge lines of the drip trays or the carburetors by a T-piece, these lines must not be routed down the firewall (drainage lines of the airbox separately are allowed).

NOTICE Pressure differences between intake pressure and pressure in the carburetor chambers may lead to engine malfunction due to incorrect fuel supply.

3.2.5) Technical data

General note

See Fig. 12.

NOTICE Utilize the complete slip-on length. Secure hoses by suitable screw clamps or by crimp connection.

NOTICE If the engine has been installed without employment of the optional ROTAX engine frame which includes also support of the airbox, than provide an appropriately support (6) for the airbox.

Connecting nipple

Connecting nipple (2) of drainage line:

Outside dia.	6 mm (1/4“)
Slip-on length	Max. 17 mm (11/16“)

Manifold pressure

Provide connection to take readings of manifold pressure (3).

Temperature sensor

Provide connections for temperature sensor (4):

Outside dia.	6 mm (.24 in.)
Slip-on length	Max. 17 mm (.67 in.)

Connecting nipple

Connecting nipple (5) of float chamber venting lines:

Outside dia.	6 mm (1/4“)
Slip-on length	Max. 17 mm (11/16“)

Graphic Air intake system

NOTE: Make sure that the air intake tubes of the airbox for fresh air and preheated air are connected correctly,

Fig. shows the GENUINE-ROTAX airbox.

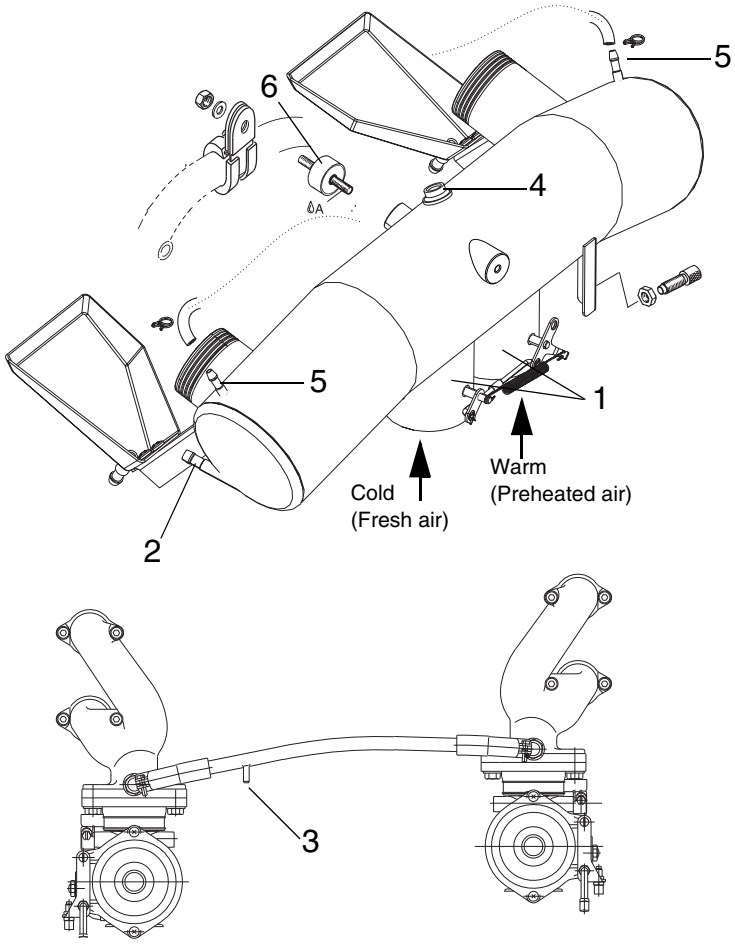

Part	Function
1	Air intake socket
2	Connecting nipple of drainage line
3	Connection for manifold pressure
4	Connection for temperature sensor
5	Connection for float chamber venting lines
6	Rubber puffer

Fig. 12 *08645,02051*

d06102.fm

3.3) Data for optional components of air intake system

Air filter

See Fig. 13.

Weight:

- See chap. 72-00-00 section: Technical data.

Graphic

Air filter

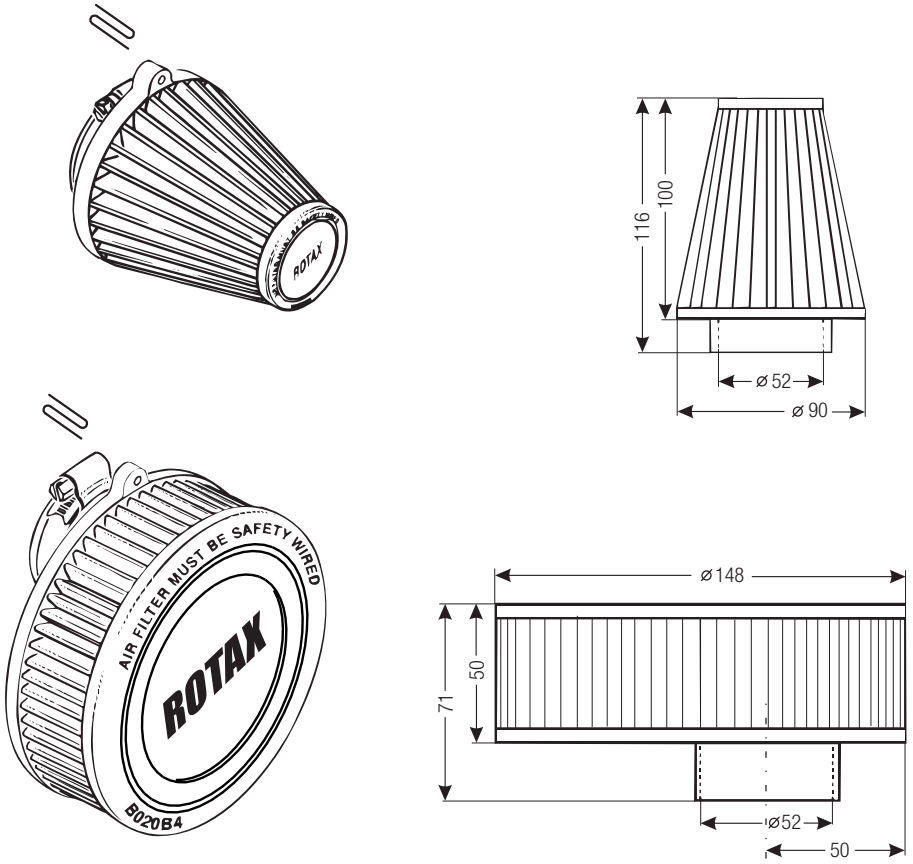

Fig. 13 *09149*

Airbox

See Fig. 14.

Airbox (configuration part no. 867756).

Weight:

See also chap. 72-00-00 section: Technical data.

Graphic

Airbox part no. 867756.

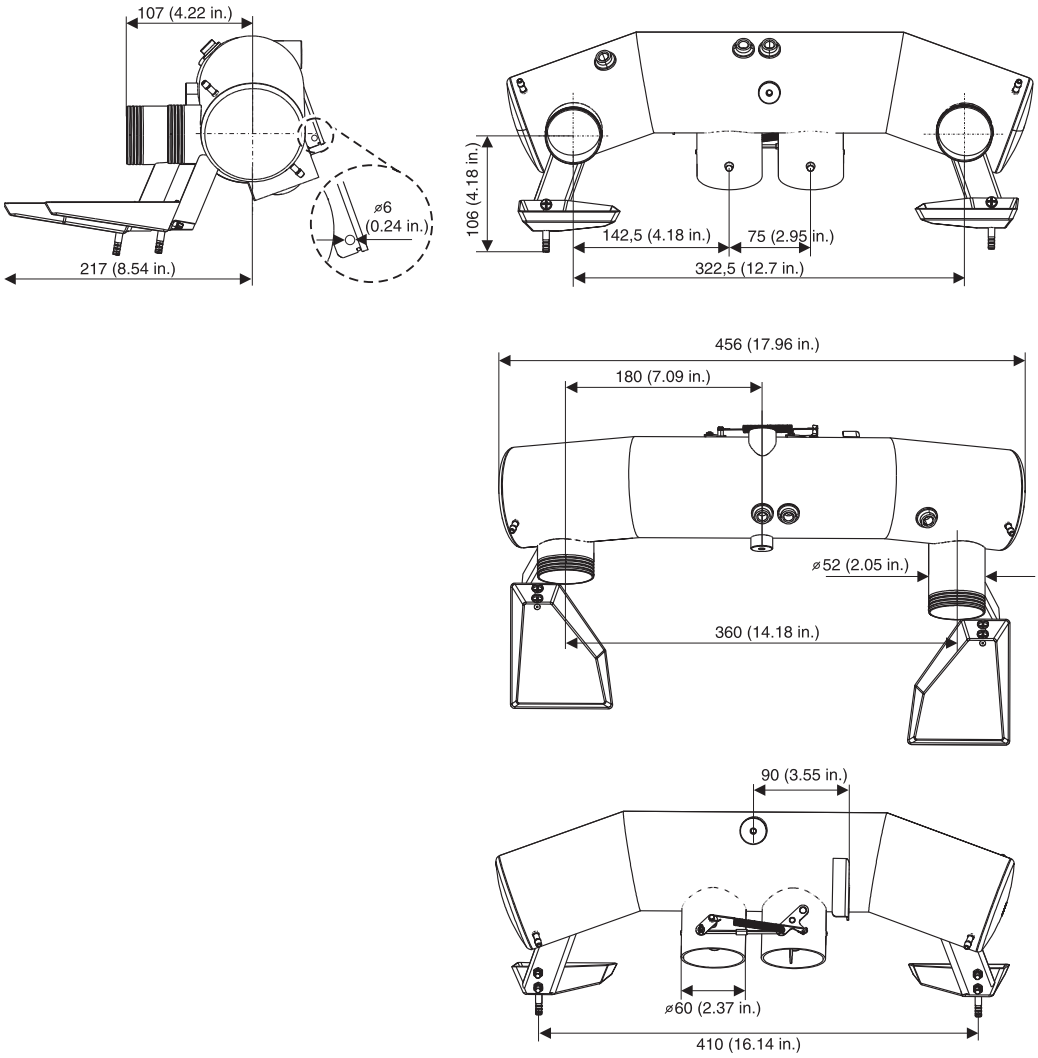

Fig. 14 *09174*

Airbox

See Fig. 15.

Airbox (new version part no. 667355 in comparison to the old version).

Weight:

See also chap. 72-00-00 section: Technical data.

Graphic

Airbox part no. 667355

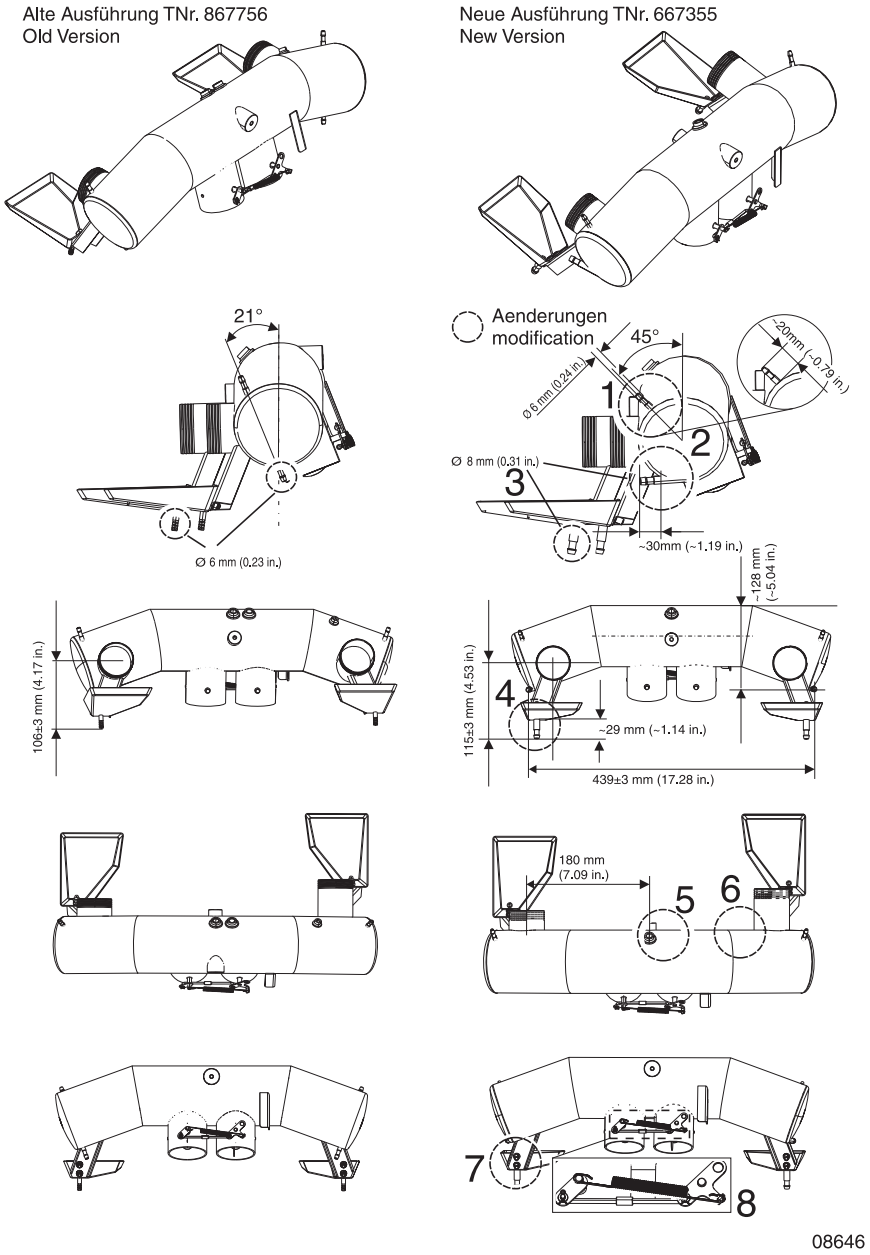

Fig. 15 *08646*

NOTES

Chapter: 75-00-00

COOLING SYSTEM

General note

The shape, size and position of the radiator(s) depends mainly on the space available in the aircraft.

When correctly installed in the aircraft, the optionally available BRP-Powertrain radiator has enough cooling capacity to keep within the standard specified operating limits. The flow resistance of the radiator coolant is correctly adjusted to the cooling system. The tube size must be sufficient. The size , shape, orientation of all cooling components must not compromise the engine cooling under all operation conditions.

Table of contents

This section of the Installation Manual contains system description, operating limits and requirements for the aircraft engine cooling system.

Subject	Page
Cooling system System description Operating limits Coolant types	Page 3 Page 3 Page 5 Page 7
Checking the efficiency of the cooling system Determination of operating limits, Coolant and necessary modification on radiator installation	Page 10 Page 15
Requirements on the cooling system Connecting size and position of connection Feasible location of radiator, expansion tank, overflow bottle	Page 15 Page 16 Page 19
General notes for the cooling system Coolant capacity Cooling air duct General notes on the cooling air ducts Data for optional components of cooling system	Page 23 Page 24 Page 25 Page 26 Page 27

Overview Cooling system

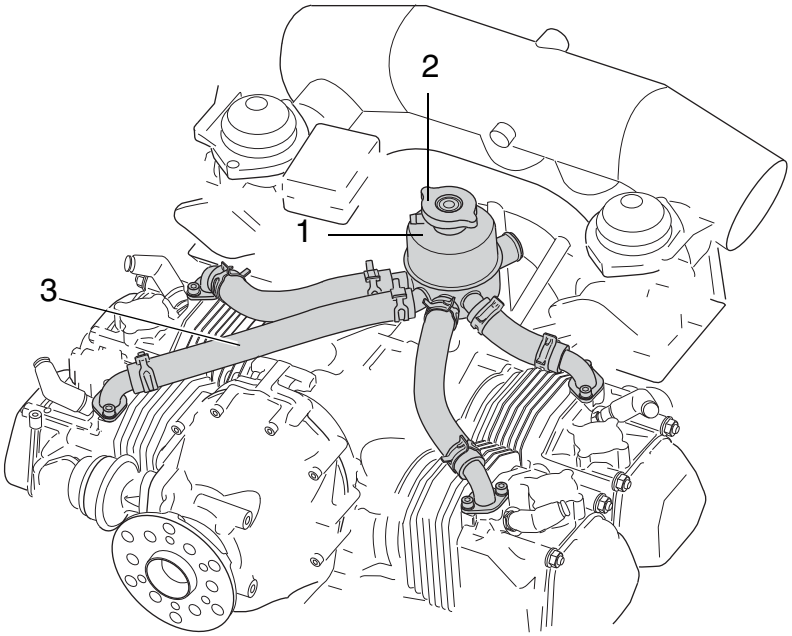

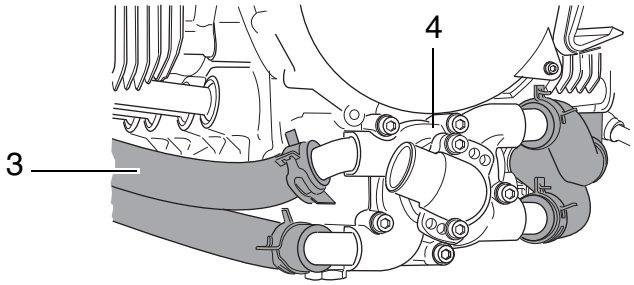

Part	Function
1	Expansion tank
2	Radiator cap
3	Water tube
4	Water pump

Fig. 1 *08532*

1) Cooling system

1.1) System description

Cooling

See Fig. 2.

The engine cooling system is designed for liquid cooling of the cylinder heads and ram air cooling of the cylinders.

The cooling system of the cylinder heads is a **closed** circuit with an expansion tank and overflow bottle.

Coolant

The coolant flow is forced by a water pump, driven from the camshaft, from the radiator to the individual cylinder heads. The coolant flows from the top of the cylinder heads to the expansion tank (1). Since the standard location of the radiator (3) is below engine level, the expansion tank located on top of the engine allows for coolant expansion.

Expansion tank

The expansion tank is closed with a pressure cap (2) (with pressure relief valve and return valve). As the coolant heats up and expands, the pressure relief valve opens and the coolant flows via a thin hose at atmospheric pressure to the transparent overflow bottle (4). As it cools down, the coolant is sucked back into the cooling circuit.

Shape, size and location

The shape, size and position of the radiator(s) depends mainly on the space available in the aircraft.

Measuring the coolant temp.

Readings are taken on measuring point of the hottest cylinder head, depending on engine installation.

NOTE: The temperature sensors are located in cylinder head 2 and 3.

Radiator

If a GENUINE-ROTAX radiator is being used, then an oil-water heat exchanger must not be present. The radiator is dimensioned to cater for the heat of the coolant and cannot cope with the additional heat generated by the oil system.

Graphic Cooling system

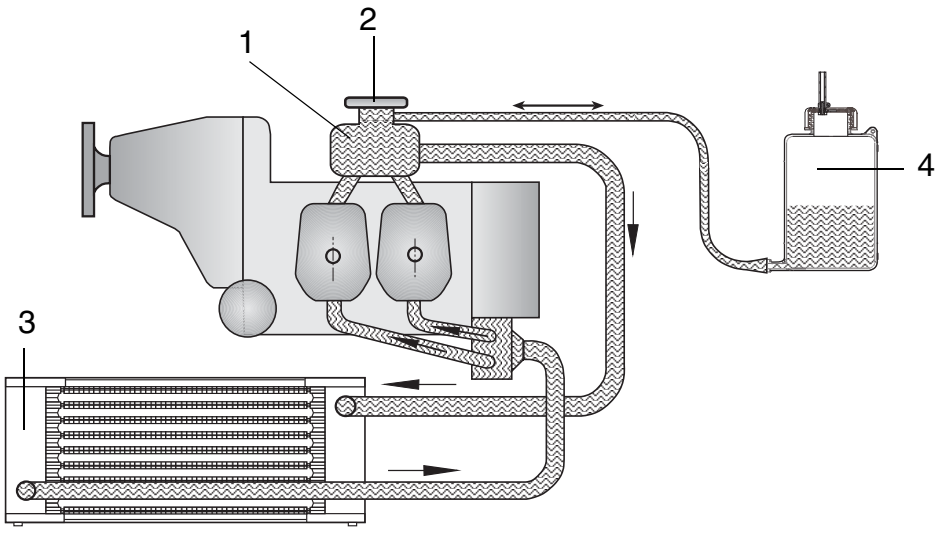

Part	Function
1	Expansion tank
2	Pressure cap
3	Radiator
4	Overflow bottle

Fig. 2 *09152*

1.2) Operating Limits

General note

⚠ WARNING Non-compliance can result in serious injuries or death! The cooling system must be designed so that operating temperatures will not exceed the maximum values.

Optional radiator

When correctly installed in the aircraft, the optionally available BRP-Powertrain radiator has enough cooling capacity to keep within the standard specified operating limits. The flow resistance of the radiator coolant is correctly adjusted to the cooling system. The tube size must be sufficient.

Boiling point of the coolant

Monitoring the cooling system is important for controlling engine cooling and prevent knocking combustion within the operating limits. It is important that the coolant circuit is designed so that the coolant does not reach boiling point under any conditions. If the temperature exceeds the boiling point, the engine can quickly overheat due to loss of coolant.

The boiling point of the coolant is mainly influenced by:

- the type of coolant (not for Suffix -01)
- mixture ratio (percentage water rate)
- the system pressure (opening pressure of radiator cap).

Coolant temperature, Suffix -01

Coolant temperature:	
Max.	120 °C (248 °F)
Permanent monitoring of coolant temperature is necessary.	

Coolant temperature, without Suffix -01

Using conventional coolant:

Coolant temperature:	
Max.	120 °C (248 °F)

Cylinder head temperature:	
912 A/F/UL	Max. 150°C (300 °F)
912 S/ULS	Max. 135°C (275 °F)
NOTE: Regarding to the necessary instrumentation, see section 2.1) Determination of operating limits, coolant and/or necessary modification on the radiator installation.	

Using waterless coolant:

Cylinder head temperature:	
912 A/F/UL	Max. 150 °C (300 °F)
912 S/ULS	Max. 135 °C (275 °F)
NOTE: Regarding to the necessary instrumentation, see section 2.1) Determination of operating limits, coolant and/or necessary modification on the radiator installation.	

Coolant temperature and cylinder head temperature

Correlation between coolant temperature and cylinder head temperature

There is in principle a regular relationship between coolant temperature and cylinder head temperature. The coolant transfers some of the combustion heat to the radiator. Thus, the coolant temperature is usually lower than the cylinder head temperature. But the temperature difference between coolant and cylinder head is not constant and can vary with different engine installation (cowling or free installation, tractor or pusher, flight speed, etc.).

NOTE: The basic requirement for safe operation is that boiling of conventional coolant must be prevented. The boiling point of conventional coolant is 120 °C (248 °F) with a 50/50 mixture proportion and a system pressure of 1.2 bar (18 psi).

1.3) Coolant types

1.3.1) Without Suffix -01

General note

In principle, 2 different types of coolant are permitted:

Description	
1	Conventional coolant based on ethylene glycol
2	Waterless coolant based on propylene glycol

NOTICE When selecting a suitable coolant, the information in Service Instruction SI-912-016, latest issue, must be observed.

Conventional coolant

Conventional coolant is recommended as it commonly available and has a greater thermal heat transfer capability. Its limitation is its lower boiling point.

Waterless coolant

Waterless coolant is recommended if the design of the aircraft can not maintain the coolant temperature limit 120 °C (248 °F).

Mixing ratio

NOTICE The manufacturers instructions regarding the coolant must be observed.

	Mixing ratio	
Description	**Concentrate**	**Water**
Conventional coolant	50 %	50 %
Some conventional coolant is available pre-mixed by the manufacturer. In this case do not mix with water, instead follow the manufacturers instructions.		
Waterless coolant	100 %	0

Boiling point

Conventional coolant:

Conventional coolant with a rate of 50 % water cannot boil at a temperature below 120 °C (248 °F) at a pressure of 1.2 bar (18 psi). The max. coolant temperature limit is therefore 120 °C (248 °F).

Permanent monitoring of coolant temperature and cylinder head temperature is necesssary.

Waterless coolant:

Waterless coolant has a very high boiling point that prevents coolant loss due to “boiling over“ (vapor loss), but not to prevent detonation, which can occur with cylinder head temperatures higher than 150 °C (300 °F) (for ROTAX 912 A/F/UL) and 135 °C (275 °F) (for ROTAX 912 S/ULS). It does not require pressure to maintain its boiling point. Due to a lower thermal conductivity the engine temperature will typically run about 5-10 °C (41-50 °F) higher with waterless coolant.

Permanent monitoring of cylinder head temperature is necessary.

Additional monitoring of the actual coolant temperature is possible but not necessary for waterless coolant.

NOTE: When using EVANS NPGR, NPG+ or added pure ethylene glycol as a coolant, note that these fluids have a flammability rating 1 (classification LOW at a scale from 0 to 4). The mentioned coolants are complying according to their material safety data sheet with a flammability classification, which has only low danger and a low risk of flammability. To date, no cases in engine operation or flight operation, laboratory conditions or from the field were reported, which show unsafe conditions of ROTAX aircraft engines in combination with the relevant coolants.

Marking

See Fig. 3.

Marking of the coolant to be used:

NOTICE The coolant to be used and its concentration (percentage water rate) must be correctly communicated to the owner.
Waterless coolant must not mix with water, as otherwise it will lose the advantages of a high boiling point.

Graphic

Marking

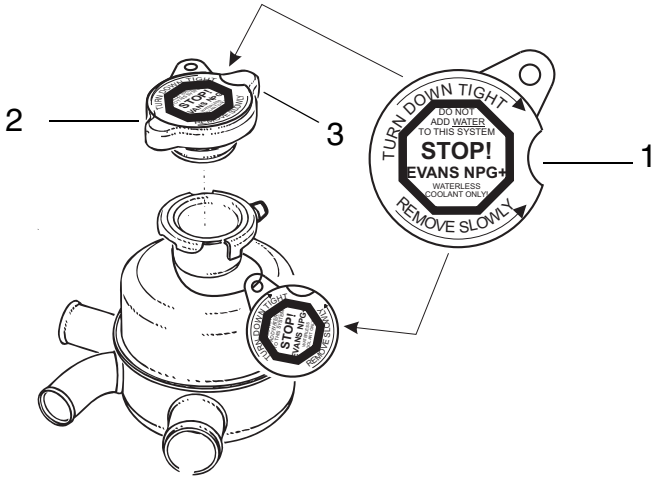

Part	Function
1	Warning sticker
2	Radiator cap
3	Opening pressure information of radiator cap

Fig. 3 08809

d06104.fm

1.3.2) Suffix -01

General note

Description	
1	Conventional coolant based on ethylene glycol

NOTICE When selecting a suitable coolant, the information in Service Instruction SI-912-016, latest issue, must be observed.

Conventional coolant is recommended as it commonly available and has a greater thermal heat transfer capability. Its limitation is its lower boiling point.

NOTICE Permanent monitoring of coolant temperature is necessary.

Mixing ratio

NOTICE The manufacturers instructions regarding the coolant must be observed.

	Mixing ratio	
Description	**Concentrate**	**Water**
Conventional coolant	50 %	50 %
Some conventional coolant is available pre-mixed by the manufacturer. In this case do not mix with water, instead follow the manufacturers instructions..		

Boiling point

Conventional coolant:

Conventional coolant with a rate of 50 % water cannot boil at a temperature below 120 °C (248 °F) at a pressure of 1.2 bar (18 psi). The max. coolant temperature limit is therefore 120°C (248 °F).

NOTICE Permanent monitoring of coolant temperature is necessary.

Waterless coolant (cylinder head - new configuration):

NOTICE Are not authorized for ROTAX 912 Series with cylinder head - new configuration.

NOTE: Further all engines which have been equipped with new cylinder heads as spare part or during engine repair/general overhaul since March 1st, 2013 are also affected.

2) Checking the efficiency of the cooling system

2.0.1) Suffix -01

General note

The maximum coolant temperature must be determined in order to check the efficiency of the cooling system.

See Fig. 4.

There are two temperature sensors (1) on the cylinder 2 and 3 for measuring the coolant temperature. During flight test the place with the highest coolant temperature must be found, this can vary with different engine installation (cowling or free installation, tractor or pusher, fight speed etc.).

Graphic

Temperature sensor

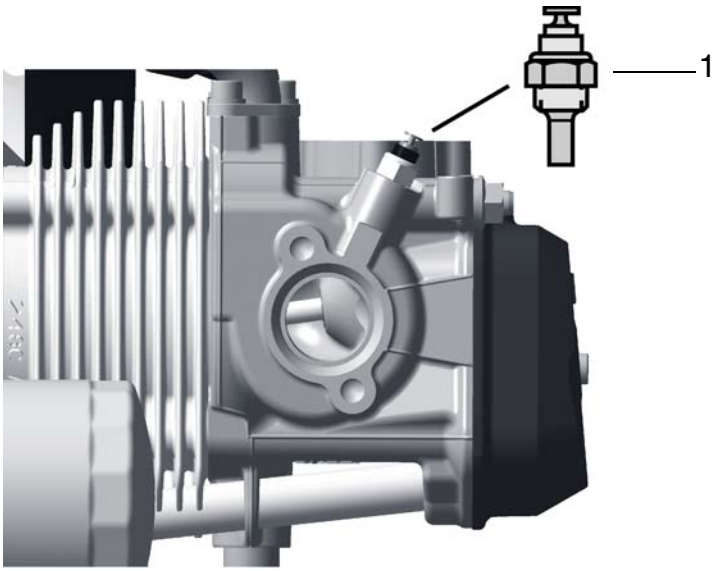

Fig. 4 *09862_3*

NOTE: At engines with cylinder heads of the new configuration, the cooling system must be designed so that the operating limits are not exceeded. A determination of the dependancy on coolant temperature and cylinder head temperature is not necessary any more.

2.0.2) Without Suffix -01

General note

The maximum coolant temperature must be determined in order to check the efficiency of the cooling system.

Cylinder head temperature

See Fig. 5.

There are two temperature sensors (1) on the cylinder 2 and 3 for measuring the cylinder head temperature. During flight test the place with the highest cylinder head temperature must be found, this can vary with different engine installation (cowling or free installation, tractor or pusher, fight speed etc.).

Graphic

Temperature sensors

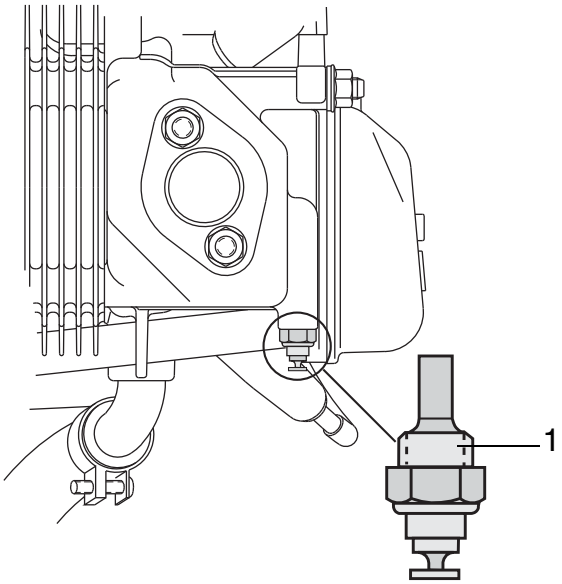

Fig. 5 *00327*

Coolant outlet temperature

See Fig. 6.

⚠ WARNING Non-compliance can result in serious injuries or death! Do not restrict the coolant flow with the sensor.

NOTICE It is possible to record a false measurement when measuring fluid temperatures. If fluid volume is lost and the sensor is not fully submerged in the liquid, the indicating instrument could incorrectly display a lower temperature, by measuring the air temperature instead of the coolant temperature.

The measuring of the coolant outlet temperature is performed using a separate sensor, which has to be installed in the line between expansion tank (1) and radiator inlet (2).

Graphic

Measurement of coolant outlet temperature

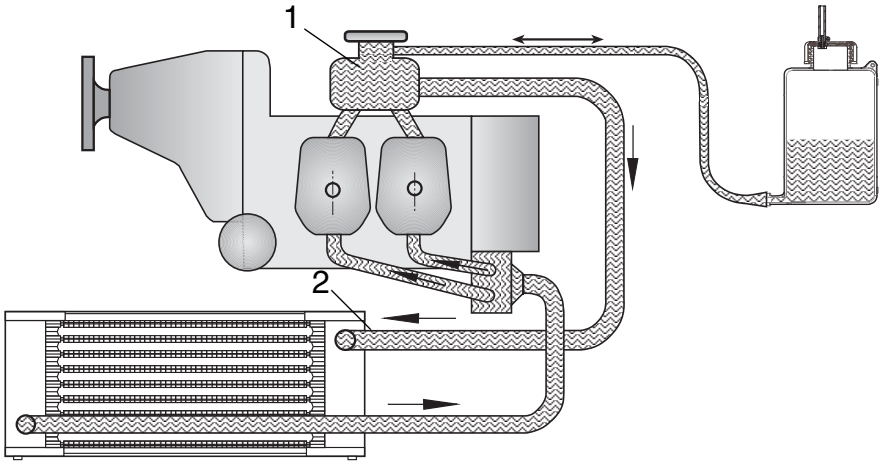

Part	Function
1	Expansion tank
2	Radiator inlet

Fig. 6 09152

Installation

The sensor may be installed in a “TEE“ inline with the fluid hose or the expansion tank may be modified to attach the sensor (not supplied by BRP-Powertrain).

2.1) Determination of operating limits, coolant and/or necessary modification on the radiator installation on engines

2.1.1) Without Suffix -01

Maximum values

Depending on the achieved maximum values of the cylinder head temperature and the coolant temperature following action are necessary:

Maximum values for		Coolant used for tests	
Coolant temperature	**Cylinder head temperature**	**Conventional coolant**	**Waterless coolant**
less than 120 °C (248 °F)	less than 135 °C[1] (275 °F) (150 °C)[2] (300 °F)	Additional instruments for displaying coolant temperature is necessary. **b)**	Modifications to the instruments or limit not necessary. **a)**
more than 120 °C (248 °F)	less than 135 °C[1] (275 °F) (150 °C)[2] (300 °F)	Cooling capacity too low. Check of the installation necessary. **c)**	
less than 120 °C (248 °F)	more than 135 °C[1] (150 °C)[2] (300 °F)		Cooling capacity too low. Check of the installation necessary. **c)**
more than 120 °C (248 °F)	more than 135 °C[1] (275 °F) (150 °C)[2] (300 °F)		

1. engine type 912 S/ULS
2. engine type 912 A/F/UL

a) Maximum cylinder head temperature is below operating limits. Operating with waterless coolant, is permissible without modification to the installation.

b) Maximum cylinder head temperature and coolant exit temperature is below operating limit.
For operating with conventional coolant it is necessary to monitoring constantly cylinder head temperature and coolant exit temperature.

NOTE: For detection of possible indication error an additional monitoring of the cylinder head temperature is necessary which shows an exceeding in case of coolant loss.

Flight test

The aircraft manufacturer has the option of converting the coolant temperature and the cylinder head temperature to an aircraft specific cylinder head temperature. This is possible by calculating the difference between the head material and the coolant temperature.

See therefore the following flight test example (page 14).

Once the calculation is made and the indicating instrument re-labeled, it is acceptable to use the cylinder head temperature as the primary cockpit display instead of installing a sensor in the coolant flow.

The measurement is based on the maximum coolant temperature and cylinder head temperature according to the current requirement.

NOTICE In no case a cylinder head temperature higher than the limit of 150 °C (300 °F) (for ROTAX 912 A/F/UL) and 135 °C (275 °F) (for ROTAX 912 S/ULS) can be defined because detonation could not be sufficiently prevented.

Refer to the flight test example that follows.

c) Cooling capacity of the installation too low.

Flight test example

Calculated values (maximum values found for coolant temperature and cylinder head temperature. Refer to the current specification of the FAA and/or EASA).

Coolant temperature ..... 102 °C (216 °F)

Cylinder head temperature ..... 110 °C (230 °F)

The cylinder head temperature is 8 °C (46 °F) higher than the coolant temperature.

Thus:

Coolant temperature .... 120 °C (248 °F)

Difference cylinder head and coolant temperature ..... +8 °C (46 °F)

Total .... = 128 °C (262 °F)

The highest cylinder head temperature permitted is 128 °C (262 °F), so that the max. coolant temperature is kept.

With this special application, safe operation of the engine that prevents boiling of the coolant is possible up to a cylinder head temperature of 128 °C (262 °F).

NOTICE This cylinder head temperature with the limit found for this type must be displayed constantly in the cockpit. The indicating instrument and the Manuals must be changed to cylinder head temperature max. 128 °C (262 °F) geändert werden.

NOTICE The design of the radiator installation must be changed (example: cowl modifications), if the operating temperature exceeds the specified limits.

2.1.2) With Suffix -01

Not relevant.

3) Cooling system requirements

Safety

⚠WARNING Non-compliance can result in serious injuries or death! The cooling system must be designed so that the operating limits are not exceeded.
To minimize flow resistance, use radiators that have both a parallel flow and have a low flow resistance. A prime example would be the GENUINE-ROTAX radiators. Be sure to use short hoses and pipelines.

NOTICE All components of the cooling system must be suitably secured.

Coolant hoses

See Fig. 7.

NOTICE Hoses exposed to direct heat radiation from the exhaust system, must be suitably protected with heat-resistant protection tubes, for example.

NOTE: Aluminium tubes with an inner diameter of 25 mm (0.98 in.) can be used instead of longer hoses. These must have a bulge (1) in order to prevent coolant hoses working loose. Note as well that this will double the number of hose clips required!

- Temperature resistance, min. 125 °C (257 °F)
- Pressure durability: min. 5 bar (72 psi)
- Inner diameter: 25 mm (1“)
- Bending radius: min. 175 mm (6.89 in.) (except moulded hoses)
- Material: 100 % resistant to glycol, antifreeze and ozone.

Graphic

Drawing aluminium tube

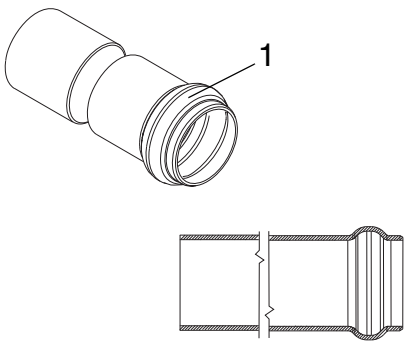

Fig. 7 *09158*

d06104.fm

Hose connecting expansion tank

Hose from expansion tank to overflow bottle:

⚠ WARNING Non-compliance can result in serious injuries or death! A soft walled hose is not suitable as it can collapse and cause cooling system failure..

- The hose from the expansion tank to the overflow bottle must be rated for vacuum/suction for min. 125 °C (257 °F), e.g. it must be strong enough to withstand high temperatures and vacuum/suction during the cooling down period.

The aircraft manufacturer must give the possibility to the pilots to check the coolant level in the expansion tank. Also it is necessary to inform the pilots about the daily inspection of the coolant level in the aircraft manufacturers operators (pilots) manual or an adequate link to the ROTAX 912 Series Operators Manual.

It is recommended that adequate measures are taken for carrying out these inspections, e.g. a flap or panel on the cowling or a warning instrument in the cockpit for low coolant level.

3.1) Connecting size and position of connections

General note

See Fig. 8 and Fig. 9.

NOTICE The hoses must be fixed with appropriate clips to prevent loss, e.g. with spring type hose clips, such as those used for the coolant hoses between the water pump and cylinder. Clips of this type have performed well in the field.

Expansion tank (1) with radiator cap (2)	
to radiator (3): Slip-on length	Outside dia. 25 mm (1“) Max. 22 mm (7/8“)
to overflow bottle (4): Slip-on length	Outside dia. 8 mm (3/8“) Max. 15 mm (9/16“)
water inlet elbow (5) Slip-on length	Outside dia. 27 mm (1 1/16“) Max. 19 mm (3/4“)

NOTE: See therefore also SI-912-020 “Running modifications“, latest issue.

Graphic Connecting dimension

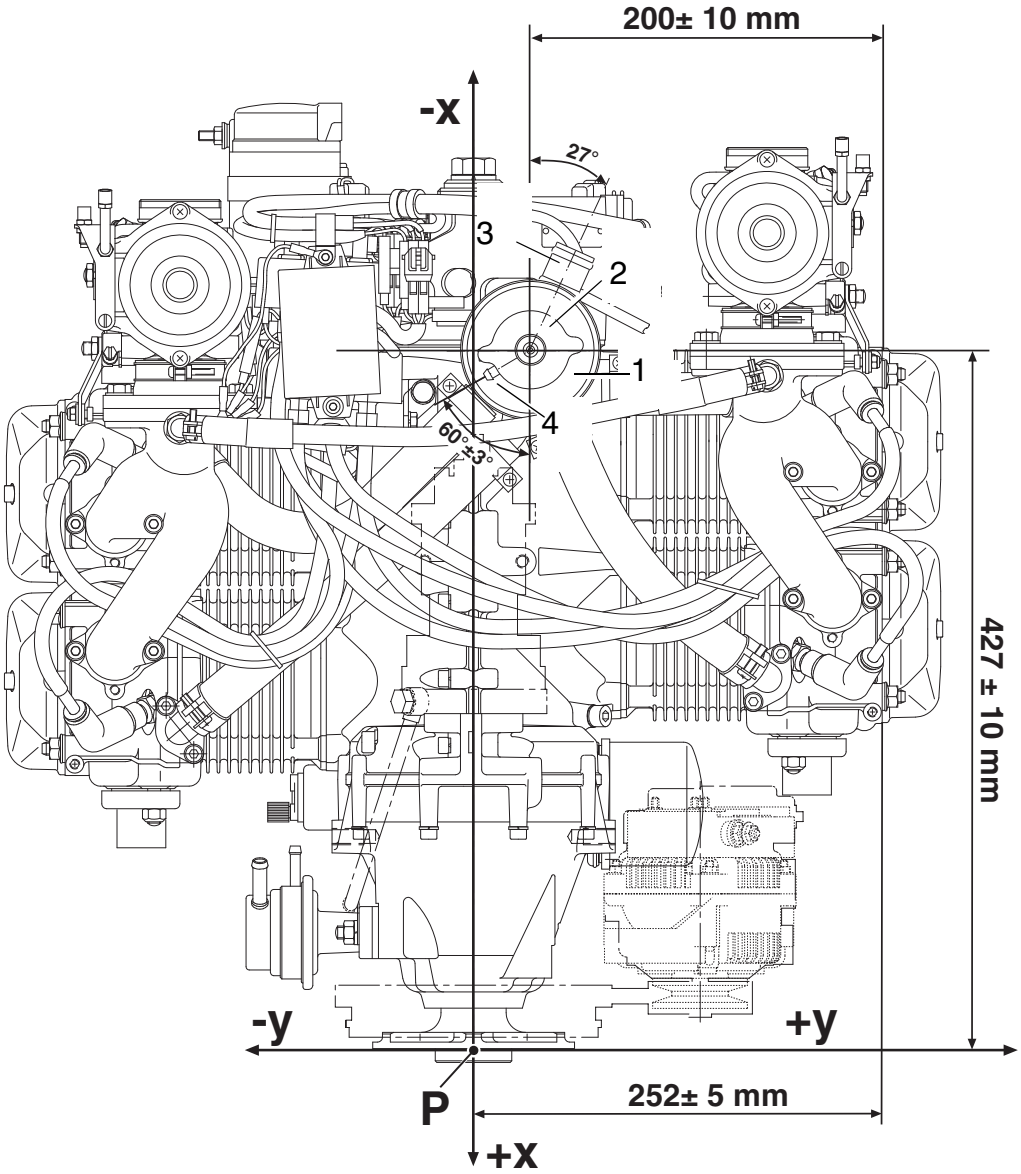

Part	Function
1	Expansion tank
2	Radiator cap
3	Connection to the radiator
4	Connection to the overflow bottle

Fig. 8 07136

d06104.fm

Connecting dimension

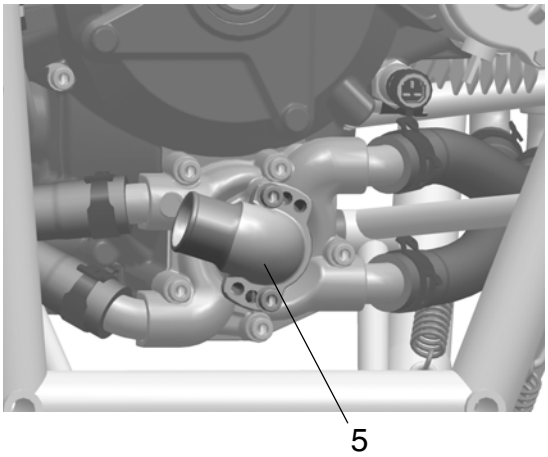

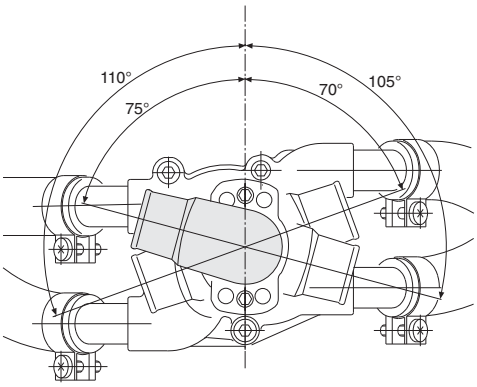

Part	Function
5	Water inlet elbow

Fig. 9 *08788,05536*

Water inlet elbow

NOTICE Utilize total slip-on length for the water inlet elbow and expansion tank. Secure hoses with suitable spring or screw clamp.

NOTE: Choose between six possible installation positions of water inlet elbow (5) appropriate to specific installation (see illustration).

Use two M6x20 Allen screws and lock washers to attach the water inlet elbow. Tighten screws to 10 Nm (90 in.lb.).

3.2) Requirements, permissible location and installation position of the radiator/expansion tank/overflow bottle

Radiator

See Fig. 10.

⚠WARNING

Non-compliance can result in serious injuries or death!
The radiator must be designed and installed such that the permissible operating temperatures are maintained and the max. values are not exceeded.
This must also apply to “**Hot day conditions**“.

NOTICE

If required, the radiator outlet (3) may be located max. 1.5 m (4.92 ft.) underneath the inlet elbow (4) of the water pump and no higher than the expansion tank (1). (see Fig. 10).

Expansion tank

To ensure proper operation of the cooling system, the expansion tank (1) with pressure cap (2) in the main operating systems must be installed on the highest point of the cooling circuit.

NOTE: The expansion tank (1) is fitted on top of the engine.

Graphic

Permissible position

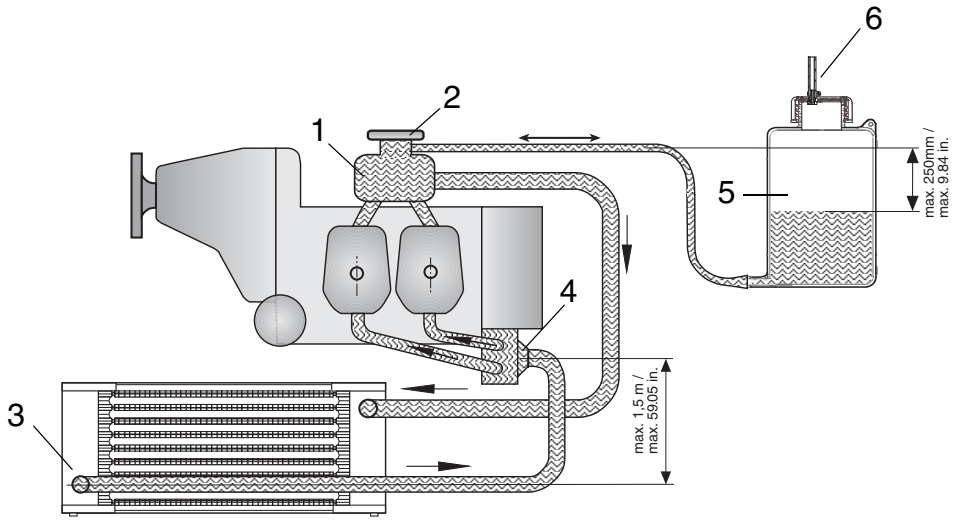

Part	Function
1	Expansion tank
2	Radiator cap

Part	Function
3	Radiator outlet
4	Water inlet elbow
5	Overflow bottle
6	Purging

Fig. 10 *08319*

3.2.1) Overflow bottle

General note

See Fig. 11.

The system also needs an overflow bottle in which surplus coolant is collected and returned to the coolant circuit during the cooling down period.

NOTICE To ensure proper operation of the cooling system, the suction height between overflow bottle and expansion tank must not exceed 250 mm (10 in.).

NOTE: For proper operation ensure that the hose to the overflow bottle is as short as possible.

Overflow bottle requirements

- Transparent material
- Temperature resistant from -40 °C to +130 °C (-40 °F to 266 °F)
- 100 % resistant to glycol and suitable for all other antifreeze agents
- Volume approx. 0.5 l (.13 USgal)
- With vent (6), diameter 2.5 mm (0.1 in.)

NOTE: See also SB-912-039 “Modification of the overflow bottle“, latest issue.

NOTE: The overflow bottle should be furnished with a label indicating function and content.

Capacity

⚠ WARNING Non-compliance can result in serious injuries or death! The overflow bottle must never be empty, otherwise air will be sucked into the cooling circuit; this can have a negative effect on the safe operation of the engine.

Installation

NOTICE The overflow bottle and its supply and discharge must not be installed close to the exhaust system, as emerging coolant can be flammable under certain conditions.

3.3) ROTAX overflow bottle (optional)

General note

If the optional ROTAX overflow bottle is used, the purging system must be arranged as shown below.

NOTE: To vent coolant steam from the overflow bottle in case of overheating, the plastic cap can be retrofitted with a hose nipple and hose.

The purging line (5) must be routed so that coolant cannot come in contact with the hot exhaust system.

The vent line must be routed in a continuous decline or furnished with a drain bore at its lowest point to drain any condensation.

The line must be protected from any kind of ice formation from condensation, e.g. insulation protection or routing in a hose with hot air flow and furnishing the line with a by-pass opening before the cowling outlet.

Work instruction

See Fig. 11.

Procedure for attaching the hose nipple**:**

Step	Procedure
1	Unscrew the plug screw (2) from the overflow bottle.
2	Bore the existing purging hole from dia. 2.5 mm (0.10 in.) to dia. 6 mm (0.236 in.).
3	Apply LOCTITE 603 to the threads of the hose nipple (3).
4	Insert hose nipple (3) with the thread first into the vent hole.
5	Fix M6 hex. nut (1) onto the hose nipple (3). Tightening torque 5 Nm (3.69 lbft).
6	Screw the plug screw onto the overflow bottle.

Steps for attaching the hose:

Step	Procedure
1	Secure the hose with a gear-type hose clip (4) or spring type hose clip.
2	Secure and route the hose (5) without kinks.

Graphic Hose nipple

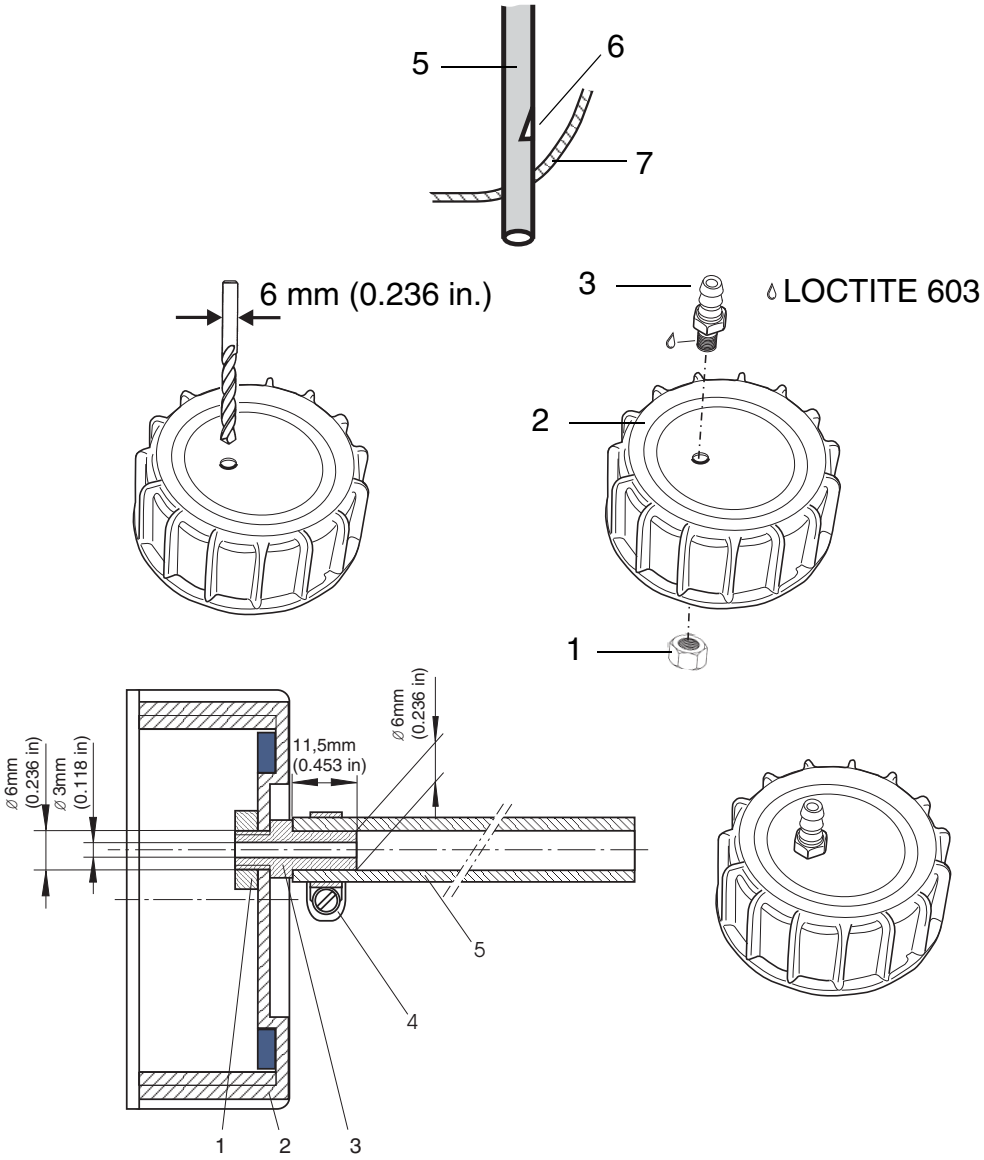

Part	Function
1	Nut M6
2	Cap
3	Hose nipple
4	Gear-type hose clamp
5	Hose
6	Bypass opening (slot)
7	Cowling

Fig. 11

09132,05033,09126

d06104.fm

4) General notes on the cooling system

General note

⚠WARNING Non-compliance can result in serious injuries or death! Certification according to the latest regulations, such as FAR or EASA, must be conducted by the aircraft or fuselage manufacturer.

Essential parts of the cooling system, such as radiator, etc., are available for this engine from BRP-Powertrain.

Radiator

See Fig. 12.

NOTICE The size and type of radiator should be adequate to transfer thermal energy of approx. 25 kW (24 BTU/s) (for ROTAX 912 A/F/UL) or approx. 28 kW (26.5 BTU/s) (for ROTAX 912 S/ULS) at take-off power.

In an installation as depicted with the radiator (1) in a higher position than the standard supplied expansion tank, a water accumulator (2) has to be fitted instead of the expansion tank. Additionally a suitable expansion tank (3) has to be installed at the highest point of the cooling circuit.

NOTE: Experience has shown that with good airflow, a radiator with an area of 500 cm² (77.5 in²) is required for troublefree operation.

Graphic

Radiator

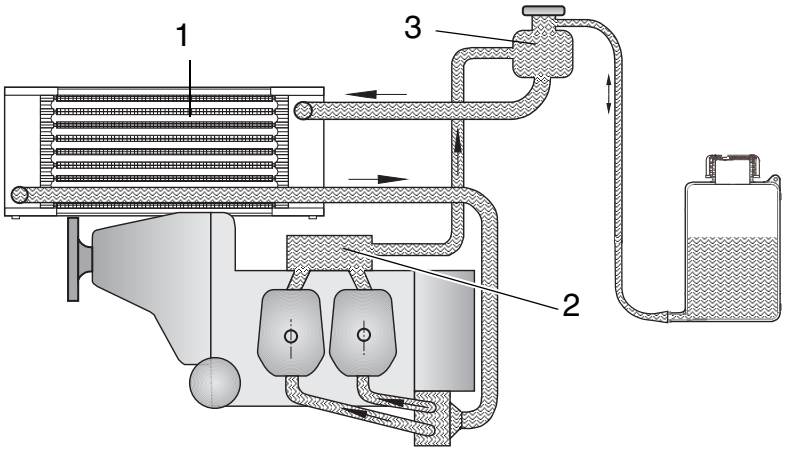

Part	Function
1	Radiator
2	Water accumulator
3	Expansion tank

Fig. 12 *08320*

Flow rate

The flow rate in the coolant circuit is approx. 60 l/min (15.85 USgal/min.) at 5800 rpm. At full throttle, an approximate value of around 0.75 m^3/s (28.59 cu.ft/sec) can be assumed for the required cooling air flow.

Flow resistance

The flow resistance of the coolant in the optional ROTAX radiator is correctly adjusted for the cooling system.

If using other radiators, check the flow rate and cooling capacity.

Installation of the radiator

No provision has been made for attachment of the radiator(s) on the engine (rubber mounts are recommended).

NOTICE

The radiator must be installed without distortion or stress and free of vibrations.
If a GENUINE-ROTAX radiator is not being installed, ensure sufficient cooling capacity.

4.1) Coolant capacity

Description	Capacity
4 cylinder heads	560 cm^3 / 0.020 cu.ft (without Suffix -01)
	400 cm^3 / 0.016 cu.ft (Suffix -01)
Coolant pump	100 cm^3 / 0.004 cu.ft
Expansion tank	250 cm^3 / 0.009 cu.ft
Overflow bottle	ca. 0,5 l / 0.13 USgal
2 m coolant hose (inner dia.Ø 18 mm)	500 cm^3 / 0.018 cu.ft
Total coolant quantity for engine	ca. 1,5 l / 0.4 USgal

4.2) Cooling air ducts (optional)

General note

Cooling air ducts are not required if the oil and coolant temperatures are within the prescribed operating limits. Otherwise following measurement must be performed for the first installation of an aircraft type (not in serial-production).

Hot day condition

See Fig. 13.

In contrast to the cylinder heads, the cylinders are ram air cooled. Plan the cooling air ducts according to installation requirement.

⚠ WARNING

Non-compliance can result in serious injuries or death! The cooling air ducts must be designed and built such that the operating temperatures are within the specified limits and maximum values are not exceeded. This must also apply to "**Hot day condition**".

Max. permitted cylinder wall temperature on hottest cylinder...200 °C (392 °F)

NOTE: If this temperature is exceeded, appropriate measures (e.g. cooling air ducts, modifications to cowling, etc.) must be taken to bring it within limits again.

NOTE: As long as the oil and coolant temperatures are within the operating limits, no cooling air ducts are necessary.

Graphic

Cooling air duct

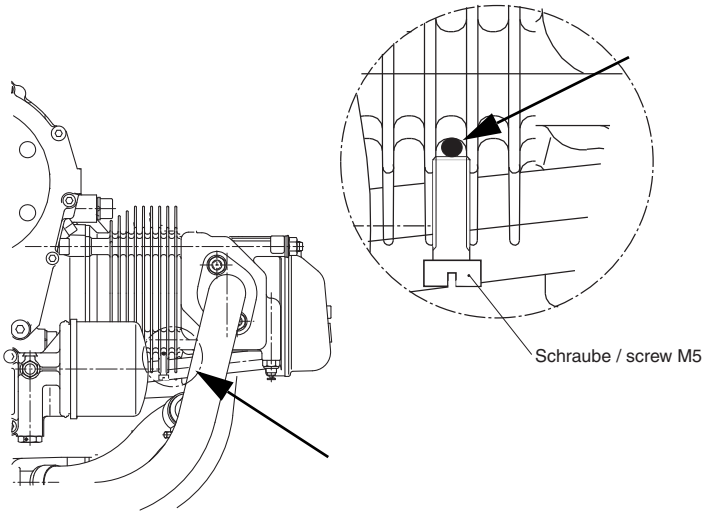

Fig. 13 02050

4.3) General notes on the cooling air ducts

Front installation

⚠ WARNING Non-compliance can result in serious injuries or death! Certification according to the latest regulations, such as FAR or EASA, must be conducted by the aircraft or fuselage manufacturer.

For front installation in a closed fuselage, ducting of cooling air to the cylinders is recommended. This removes the need for costly horizontal partitioning (baffles).

NOTE: It also means that the engine remains completely on the warm side of the engine compartment and is very easy to access. In special cases a separate cold air supply to the air filters must be provided.

BRP-Powertrain has developed a non-certified cooling air duct especially for this application.

Selecting cooling air ducts

The following recommendations should assist the aircraft or fuselage manufacturer in selecting suitable cooling air ducts.

Cooling capacity	The cooling air ducts must be designed such that they transfer thermal energy of approx. 6 kW (5.7 BTU/s) at take-off performance.
Cross section of air duct	Cross section of air duct under the airflow baffle min. 100 cm^2 (15.50 in^2).
Material	Glass fibre reinforced plastic or heat and fire resistant material.
Attachment options	Formlocking on engine block and mounting above the cylinder and the crankcase. NOTE: If formlocking attachment is not sufficient, additional attachment is possible using two M8 threaded lugs on the top of the engine block.

NOTICE The stated maximum permissible loads (per screw) are valid only if using the minimum specified thread length, and must never be exceeded.

Thread height 18 mm (0.71 in.)).

Permissible loads (per screw)

	x-axis	y-axis	z-axis
Attachment points	-300 mm (-11.81 in.)	-30 mm (-1.18 in.)	-14 mm (-0.55 in.)
	-300 mm (-11.81 in.)	-30 mm (-1.18 in.)	-14 mm (-0.55 in.)

	Attachment points
Max. permissible force (safe load) in (N) on x, y and z axis	2000 N (449.62 lb-force)
Max. permissible bending moment (safe load) in (Nm) in x, y and z axis	50 Nm (36.89 lbft)
Min. length of thread (mm)	15 mm (0.59 in.)

4.4) Data for optional components of cooling system

Overflow bottle

See from Fig. 14 to Fig. 16

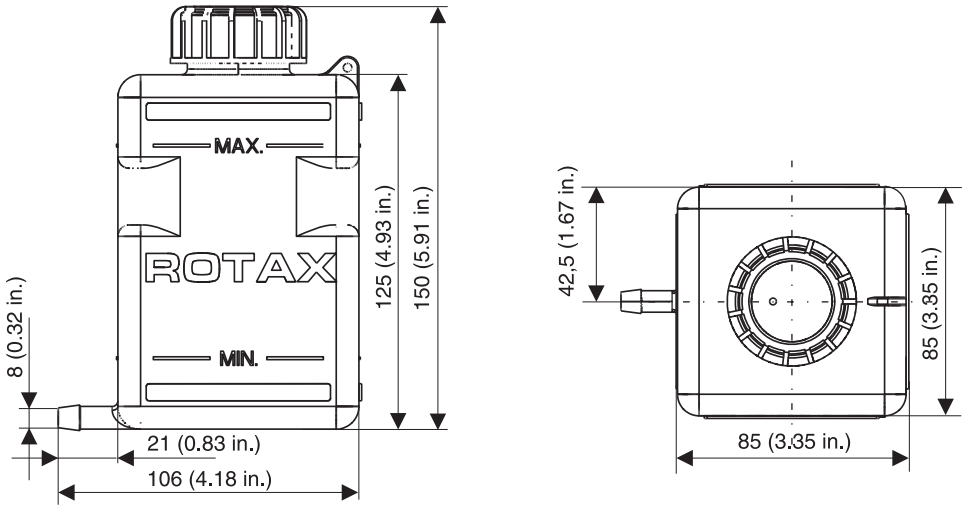

Fig. 14 *09148*

Radiator

Weight: see also chap. 72-00-00 section: 2.1)

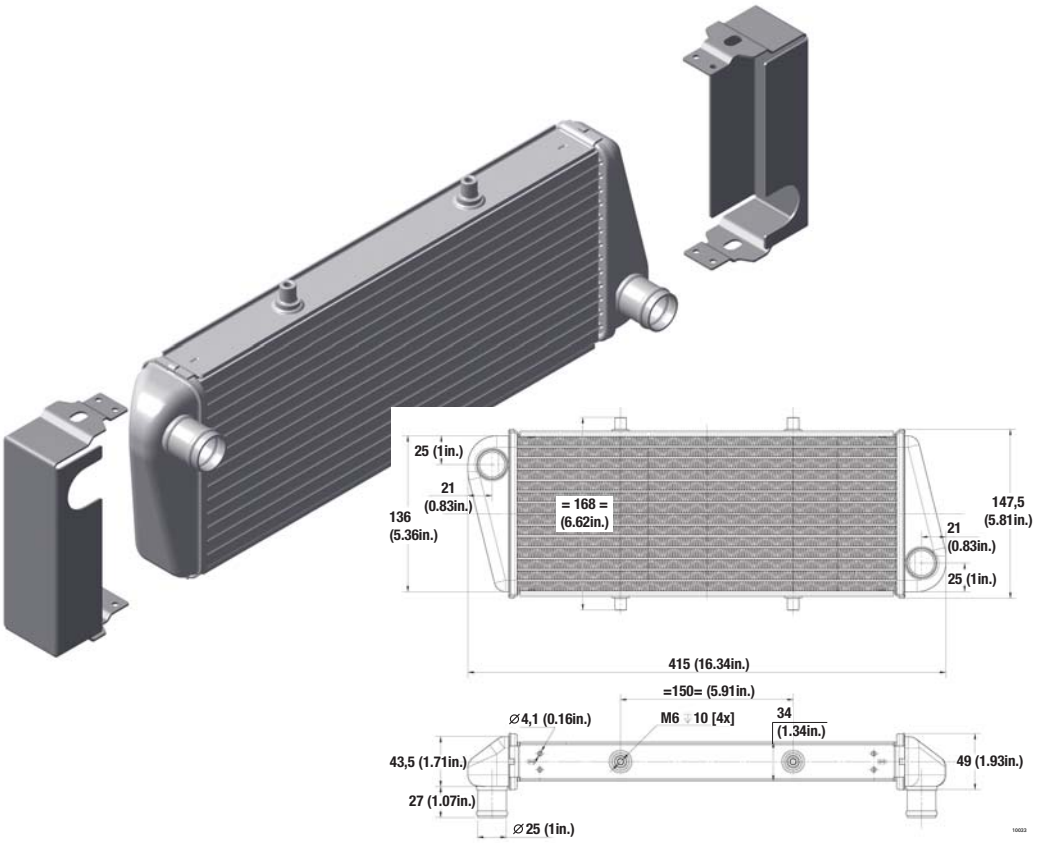

Fig. 15 *10033*

Cooling air baffle

Weight: see also chap. 72-00-00 section: 2.1).

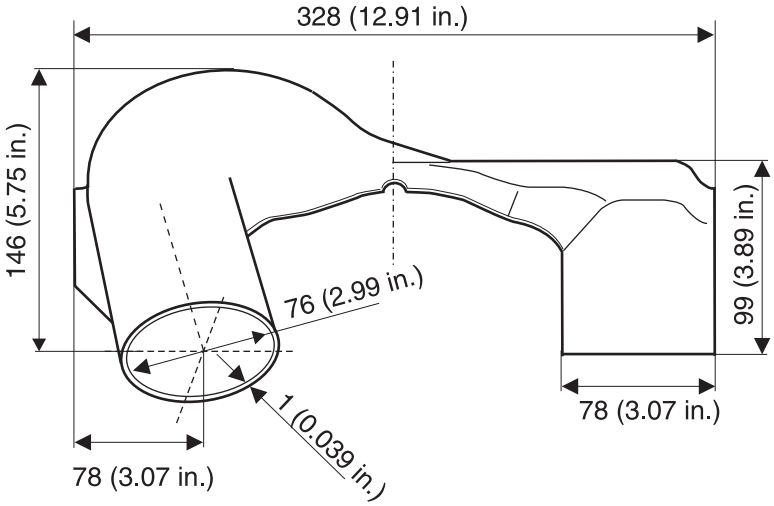

Fig. 16 *09165*

d06104.fm

Chapter: 76-00-00

ENGINE MANAGEMENT

Introduction

NOTICE Obey the manufacturers instructions!

Table of contents

This section of the Installation Manual describes the engine management of the aircraft engines.

Subject	Page
Connections for instrumentation	Page 3
Sensor for cylinder head temperature	Page 3
Sensor for coolant temperature (Suffix -01)	Page 3
Sensor for oil temperature	Page 6
Oil pressure sensor	Page 8
Mechanical rev counter (tach drive)	Page 10
Monitoring of the intake manifold pressure	Page 11
Air temperature in the airbox (optional)	Page 12

NOTES

1) Connections for instrumentation

General note

NOTICE These connections to be established in accordance to certification and/or national specifications.
The certification for connections and connection lines have to be conducted by the aircraft manufacturer to the latest requirements like FAR and EASA.

For notes regarding the electric rev counter consult the chap. Electric system.

1.1) Sensor for cylinder head temperature and coolant temperature

General note

See Fig. 1.

Depending on the cylinder head design (old or new version), there are different methods of measurement with either cylinder head temperature sensor (without Suffix -01) or coolant temperature sensor (Suffix -01).

1.1.1) Cylinder head temperature sensor (without Suffix -01)

Technical data

The temperature sensor (1) is directly fitted into cylinder head i.e. a direct temperature reading of the cylinder head material is taken.

Location	In the cylinder head of the cylinder 2 and 3
Connection	Spade terminal 6.3x0.8 DIN 46247
Grounding	Via engine block

Position

Position temperature sensor:

	Axes		
Cylinder head	x-axis	y-axis	z-axis
2	-200.0 mm (-7.88 in)	241.0 mm (9.49 in)	-157.0 mm (-6.18 in)
3	-387.0 mm (-15.24 in)	-241.0 mm (-9.49 in)	-157.0 mm (-6.18 in)

Graph resistance

Graph of sensor resistance over temperature:

See Fig. 1.

NOTICE The graph resistance over temperature has been determined, and is effective at the following conditions only:
Ambient temperature: 20 °C (68 °F)
Tolerance: Max ±10 %

Graphic Sensor for cylinder head temperature

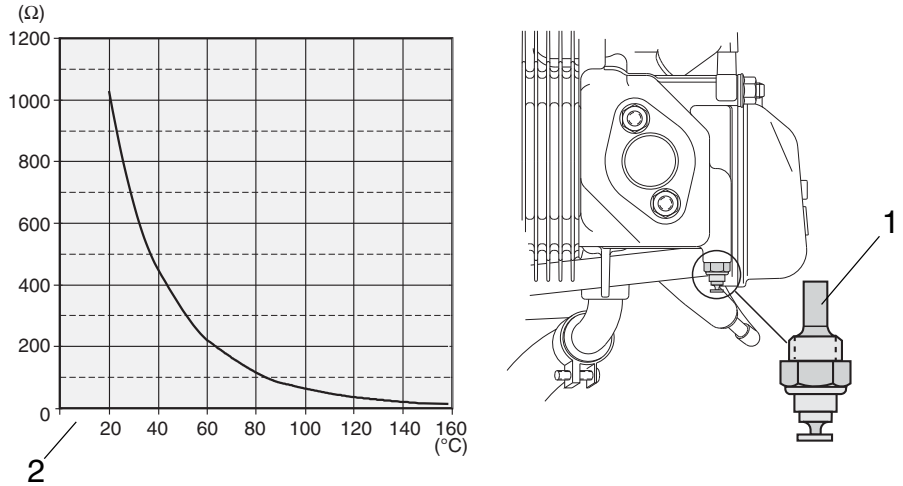

Part	Function
1	Sensor for cylinder head temperature
2	Graph resistance over temperature

Fig. 1 *00227, 00327*

1.1.2) Sensor for coolant temperature (Suffix -01)

General See Fig. 2.

The temperature sensor is directly fitted into cylinder head i.e. a direct temperature reading of the coolant is taken.

Technical data

Location	In the cylinder head of the cylinder 2 and 3
Connection	Spade terminal 6.3x0.8 DIN 46247
Grounding	Via engine block

Position

Position temperature sensor:

	Axes		
Cylinder head	x-axis	y-axis	z-axis
2	26.0 mm (1.02 in)	225.9 mm (8.90 in)	44.4 mm (1.74 in)
3	-173.0 mm (-6.81 in)	-225.9 mm (-8.90 in)	44.4 mm (1.74 in)

Graph resistance

Graph of sensor resistance over temperature:

See Fig. 2.

NOTICE The graph resistance over temperature has been determined, and is effective at the following conditions only:
Ambient temperature: 20 °C (68 °F)
Tolerance: Max ±10 %

Grafik

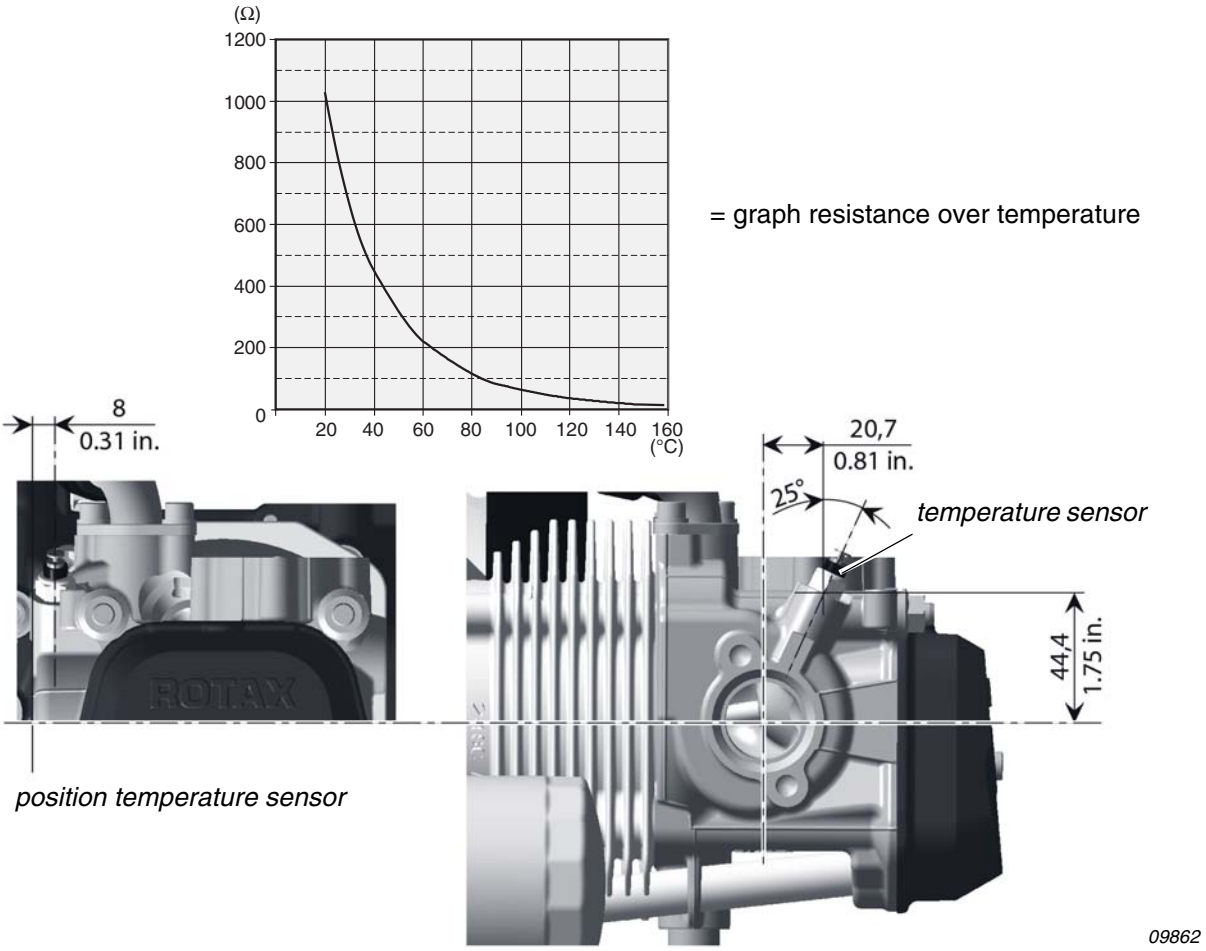

Fig. 2

1.2) Sensor for oil temperature

General note

See Fig. 3.

NOTICE Certification to the latest requirements such as FAR of EASA has to be conducted by the aircraft manufacturer.

BRP-Powertrain offers a non-certified temperature indicating instrument. Refer to Illustrated Parts Catalog, latest issue.

Marking

Marking (2): Marked with “TO“ (**T**emperature **O**el) on oil pump flange.

NOTICE To avoid any mix-up with indication wiring, mark this particular cable also with “TO“.

Position

Position of the temperature sensor (1) on the oil pump flange:

	Axes		
Point of support	x-axis	y-axis	z-axis
	-115.0 mm (-4.53 in)	46.0 mm (1.81 in)	-150.0 mm (-5.92 in)

Technical data

Anschlüsse für Öltemperaturgeber:

Location	Oil pump housing
Connection of sensor wiring	Spade terminal 6.3x0.8 DIN 46247
Grounding	Via engine block

Graph resistance

Graph of sensor resistance over temperature:

See Fig. 3.

NOTICE The graph resistance over temperature has been determined, and is effective at the following conditions only:
Ambient temperature: 20 °C (68 °F)
Tolerance: Max ±10 %

Graphic

Sensor for oil temperature

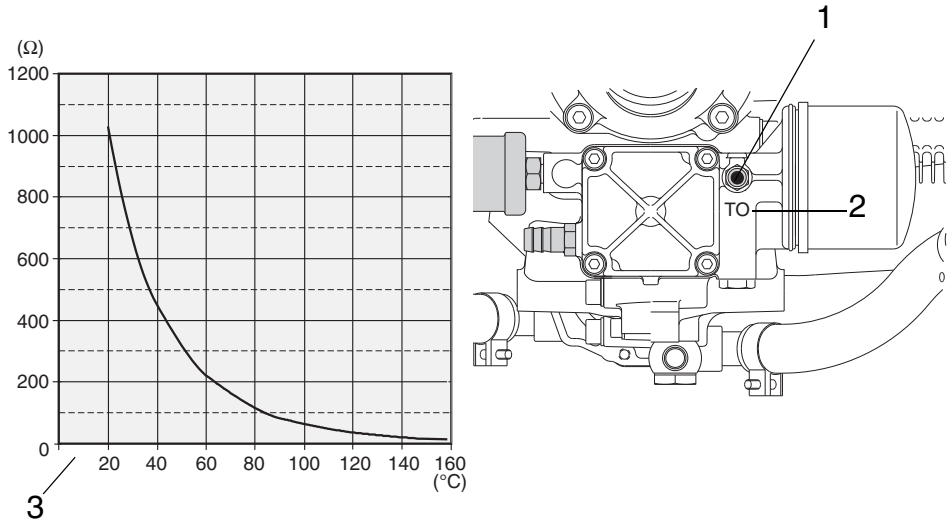

Part	Function
1	Sensor for oil temperature
2	TO marking
3	Graph resistance over temperature

Fig. 3 *00227, 00327*

1.3) Oil pressure sensor

General note

See Fig. 4.

NOTICE Certification to the latest requirements such as FAR of EASA has to be conducted by the aircraft manufacturer.

As the instruments need a separate power supply and a different design for the electrical oil pressure sensor, the resistance type instrument (type VDO), which was supplied by BRP-Powertrain up to now, is not suitable anymore. Suitable instruments are offered by various instrument manufacturers (e.g. ROAD or Aviasport).

Technical data

Oil pressure sensor:

Location	Oil pump housing
Wire gauge	Standard wire 0.5 mm^2 (AWG 20)
Cable length	3 m (118 in)
Operating temperature range	Min. -40 °C (-40 °F) Max. +125 °C (+257 °F)
Grounding	Via engine block/airframe ground
Tightening torque	15 Nm (133 in.lb) and LOCTITE 243

Output signal

In contrary to the oil pressure sensor offered up to now, which was providing the signal on the basis of a sensor resistance variation, the new oil pressure sensor (1) operates on basis of a current variation. This has to be taken into account for the selection of the appropriate cockpit instrument.

Wiring connection

Wiring connection for instrument:

NOTE: The sensor cable can be modified in its length according to the installation situation, e.g. shortened or extended. For extension an appropriate, commercially available cable can be used. A resistance cable or similar is not necessary.

The sensor cable is approx. 3 m (118 in) long and has 3 leads. The **Black** lead is not to be connected and has no function.

- The **Red** lead from the sensor has to be connected to the positive bus via a fuse or circuit breaker.
- The **White** lead (output signal) has to be connected directly to the instrument.

See also the relevant instructions of the instrument supplier/aircraft manufacturer for correct connection and wiring.

Graph current over pressure

See Fig. 4.

NOTICE The graph current over pressure (2) has been determined, and is effectiva at the following conditions only:
Ambient temperature: 20 °C (68 °F)
Tolerance: Max ±3 %

Graphic

Oil pressure sensor

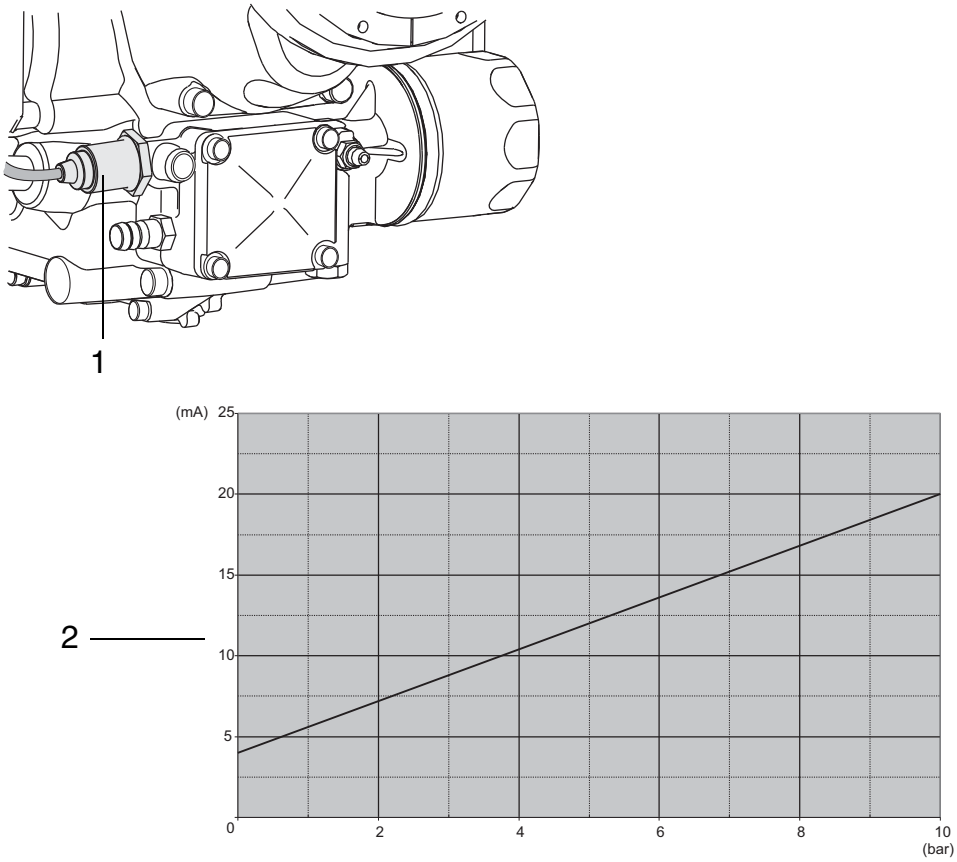

Part	Function
1	Oil pressure sensor
2	Graph current over pressure sensor

Fig. 4 *08379,08442*

d06105.fm

1.4) Mechanical rev counter (tach driver) (optional)

General note

See Fig. 5.

Technical data

Mechanical rev counter:

Location	Ignition housing (1)
Direction of rotation of the rev counter shaft (2)	Right (Clockwise)
Reduction ratio	i= 4 i.e. 1/4 of engine speed
Installation dimensions	See figures above

Position

Position mechanical rev counter:

	Axes		
point of engagement P4	x-axis	y-axis	z-axis
	-465,0 mm (-18.31 in)	87,0 mm (3.43 in)	-160,0 mm (-6.3 in)

Graphic

Mechanical rev counter

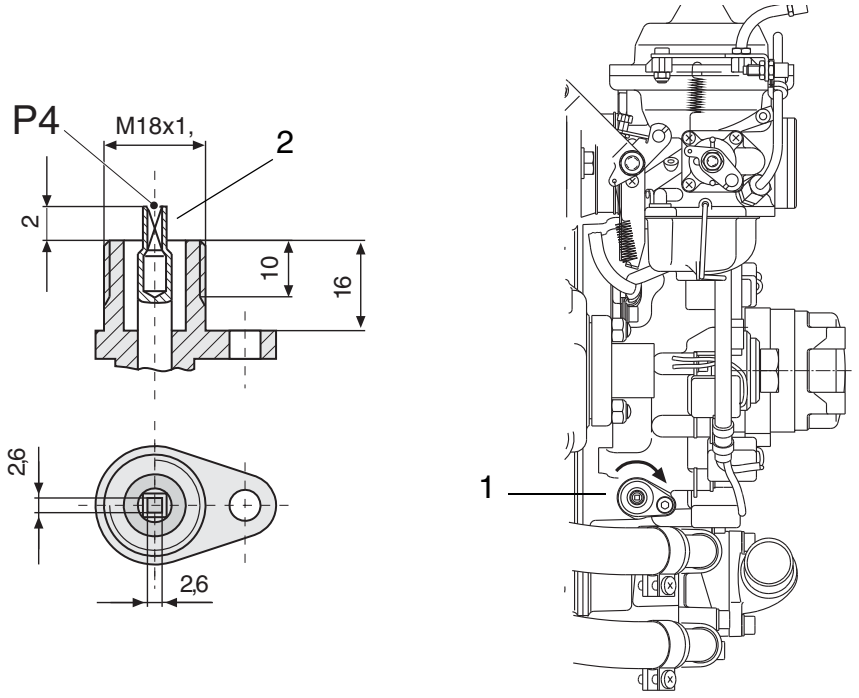

Part	Function
1	Ignition housing
2	Rev counter shaft

Fig. 5

00560, 00562

d06105.fm

2) Monitoring of the intake manifold pressure

General note

See Fig. 6.

NOTICE Utilize the total slip-on length on all joints. Secure hose by suitable screw clamps or crimp connection.

Connection nipple

Connection nipple (1) to measure manifold pressure:

Outside dia.	6 mm (1/4“)
Slip-on length	Max. 17 mm (11/16“)

NOTICE Protective covering to be utilized for transport and at engine installation only. If connection for pressure reading is not employed it has to suitably plugged. New style compensating tubes have plugged this connection by a screw M3.5x6 (2).

NOTICE Flawless operation of the indicating instrument needs the installations of a water trap between engine and instrument for fuel condensate.

Graphic

Monitoring of the intake manifold pressure

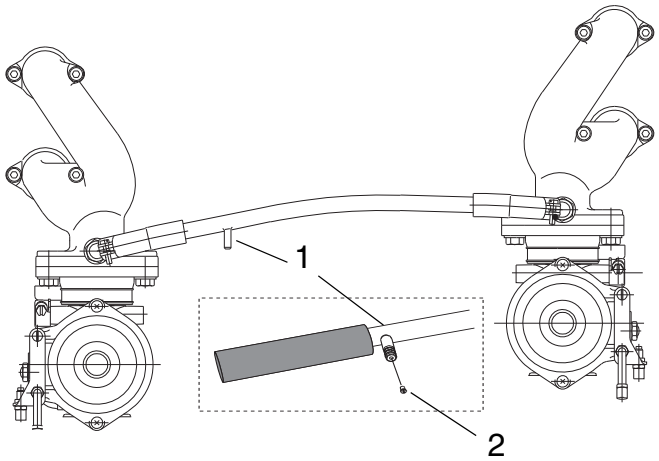

Part	Function
1	Connection nipple
2	Screw M3.5x6

Fig. 6 02051

d06105.fm

2.1) Air temperature in the airbox (optional)

General note

See Fig. 7.

To take air temperature readings in the airbox a connection is provided. This connection is closed on the standard engine by a plug screw.

Plug screw

Connection:

Thread	M6
Thread length	approx. 9 mm (3/8“)

Graphic

Airbox

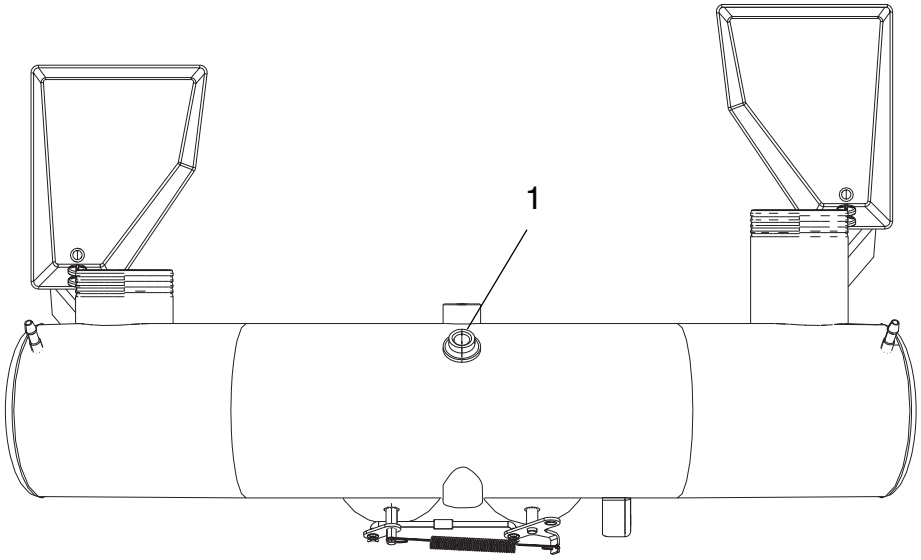

Part	Function
1	Plug screw

Fig. 7 *08647*

Chapter: 78-00-00

EXHAUST SYSTEM

General note

See Fig. 1.

⚠ WARNING

Non-compliance can result in serious injuries or death! Connect drainage lines, otherwise emerging fuel from a possible leakage could drip onto the exhaust system. RISK OF FIRE!

NOTICE

The exhaust system must be designed by the aircraft or fuselage manufacturer such that the permissible loads and bending moments on the points of attachment are not exceeded. The exhaust system may require additional support.

Table of contents

This section of the Installation Manual contains information on the exhaust system of the aircraft engines.

Subject	Page
General notes on the exhaust system	Page 3
Exhaust system requirements Technical data	Page 5 Page 5
Attaching of the exhaust system	Page 7
Operating limits Data for optional components of exhaust system	Page 9 Page 10

Overview Exhaust system

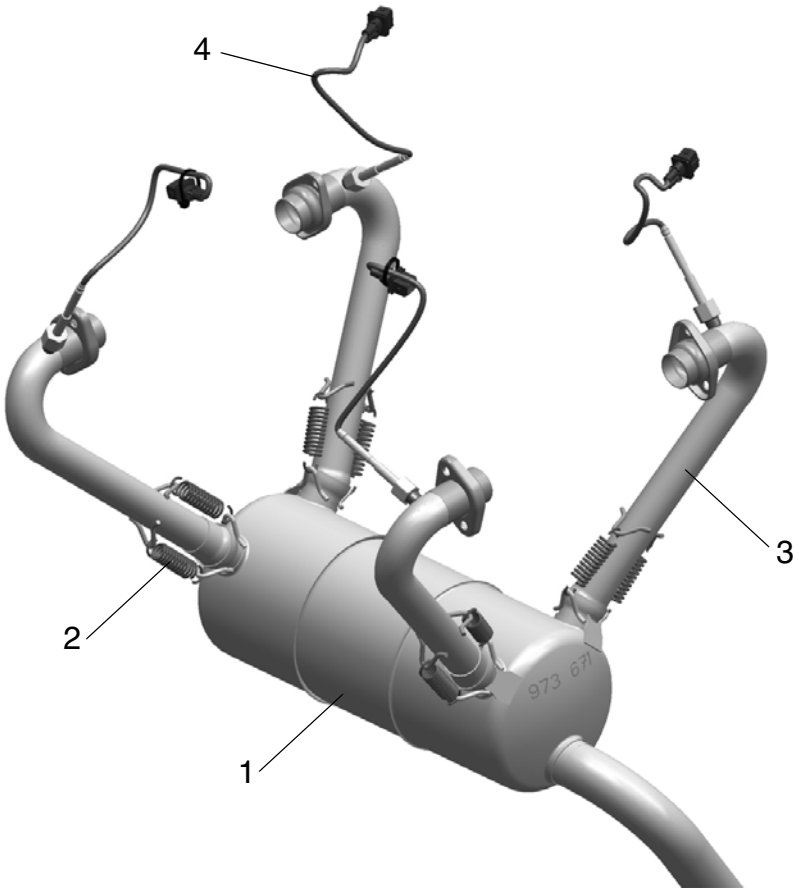

Part	Function
1	Muffler
2	Tension spring
3	Exhaust tube
4	EGT temperature sensor

Fig. 1 *06303*

1) General notes on the exhaust system

Certification

An exhaust system especially designed for universal application has been developed by BRP-Powertrain. Certification according to the latest regulations, such as FAR or EASA, must be conducted by the aircraft or fuselage manufacturer.

NOTICE Vibrations due to improper installation and maintenance is the most common reason for damage of the exhaust system.

1.1) The following recommendations should help the aircraft or fuselage manufacturer to select a suitable exhaust system.

Damping element

The ideal is a common transversal damping element serving all 4 cylinders, positioned under the engine.

NOTE: Equal length of pipes from the cylinder to damping element is recommended for better tuning.

Distribution of the exhaust system

Distribution of the exhaust system into 2 separate systems is not recommended. Individual mufflers on either side cause power loss and increased engine noise.

Ball joints

The 4 ball joints must be used to avoid damage due to vibration.

NOTICE Be aware that locked up stresses cause cracks!

All ball joints have to be greased regularly with heat resistant lubricant (e.g. LOCTITE ANTISEIZE) to avoid gripping and seizing of the joints.

Vibration

NOTICE Appropriate to the installation a vibration damping support for the exhaust system has to be provided on the airframe manufacturers side.

Springs to be secured with safety wire to prevent FOD! See Fig. 2.

The sketch illustrates a possibility how to interconnect the exhaust springs to prevent the vibration of these springs and thus premature wear.

Graphic Exhaust spring.

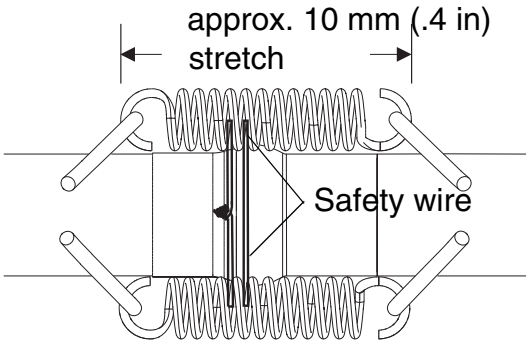

It is also recommended to fill the springs with high heat silicone for additional damping of vibrations.

Fig. 2 *08326*

2) Exhaust system requirements

General note

NOTICE Install heat shields in required areas (fuel, oil, coolant hoses or tubes) and/or on the electronic components. Because of the high temperatures, provide suitable protection against accidental contact.

NOTICE Secure exhaust system by suitable means according to installation requirements (Lockwire, heat-resistant silicone to dampen the exhaust spring etc.).

2.1) Technical data

See Fig. 3.

- Average radius of exhaust manifold: at least 40 mm (1.57 in.)
- Inner diameter of manifold pipe: at least 28 mm (1.10 in.)
- Volume of damping element: approx. 5 l (1.32 USgal)
- Back pressure at maximum power: max. 0.2 bar (2.9 psi) measured in each case approx. 100 mm (3.94 in.) beyond the end of the exhaust flange)

2.2) If a GENUINE-ROTAX exhaust is not used

General note

The four prefitted exhaust sockets with exhaust flange and lock nuts must be used.

Exhaust sockets material: X6CrNiTi 1810 (DIN 1.4541)

Tightening torque of M8 lock nuts: 15 Nm (133 in.lb).

NOTE: The exhaust flange does not touch the cylinder head.

Graphic

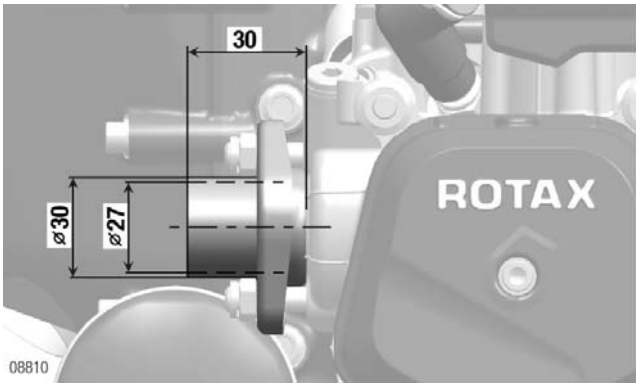

Fig. 3 *08810*

NOTES

3) Attaching of the exhaust system

General note

See the following graphic.

The shape and configuration of the exhaust system is essentially determined by the free space available in the aircraft.

Two M8x23 studs are provided on each cylinder for attaching the exhaust system.

Location of the studs

NOTE: All dimensions from zero reference point (P).

	Coordinates		
Location	**x axis mm/in**	**y axis mm/in**	**z axis mm/in**
Cylinder 1	-160 mm (-6.3 in)	-196 mm (-7.72 in)	-82 mm (-3.23 in)
	-160 mm (-6.3 in)	-212 mm (-8.35 in)	-113 mm (-4.45 in)
Cylinder 2	-192 mm (-7.56 in)	196 mm (7.72 in)	-82 mm (-3.23 in)
	-192 mm (-7.56 in)	212 mm (8.35 in)	-113 mm (-4.45 in)
Cylinder 3	-408 mm (-16.06 in)	-196 mm (-7.72 in)	-82 mm (-3.23 in)
	-408 mm (-16.06 in)	-212 mm (-8.35 in)	-113 mm (-4.45 in)
Cylinder 4	-438 mm (-17.24 in)	196 mm (7.72 in)	-82 mm (-3.23 in)
	-438 mm (-17.24 in)	212 mm (8.35 in)	-113 mm (-4.45 in)

	Attachment points
Max. permissible forces (safe load) in (N/lb-force) on x, y and z axis	1000 N/224.81 lbf
Max. permissible bending moment (safe load) in (Nm) on x, y and z axis	40 Nm/30 ft.lb

Graphic Exhaust system assy.

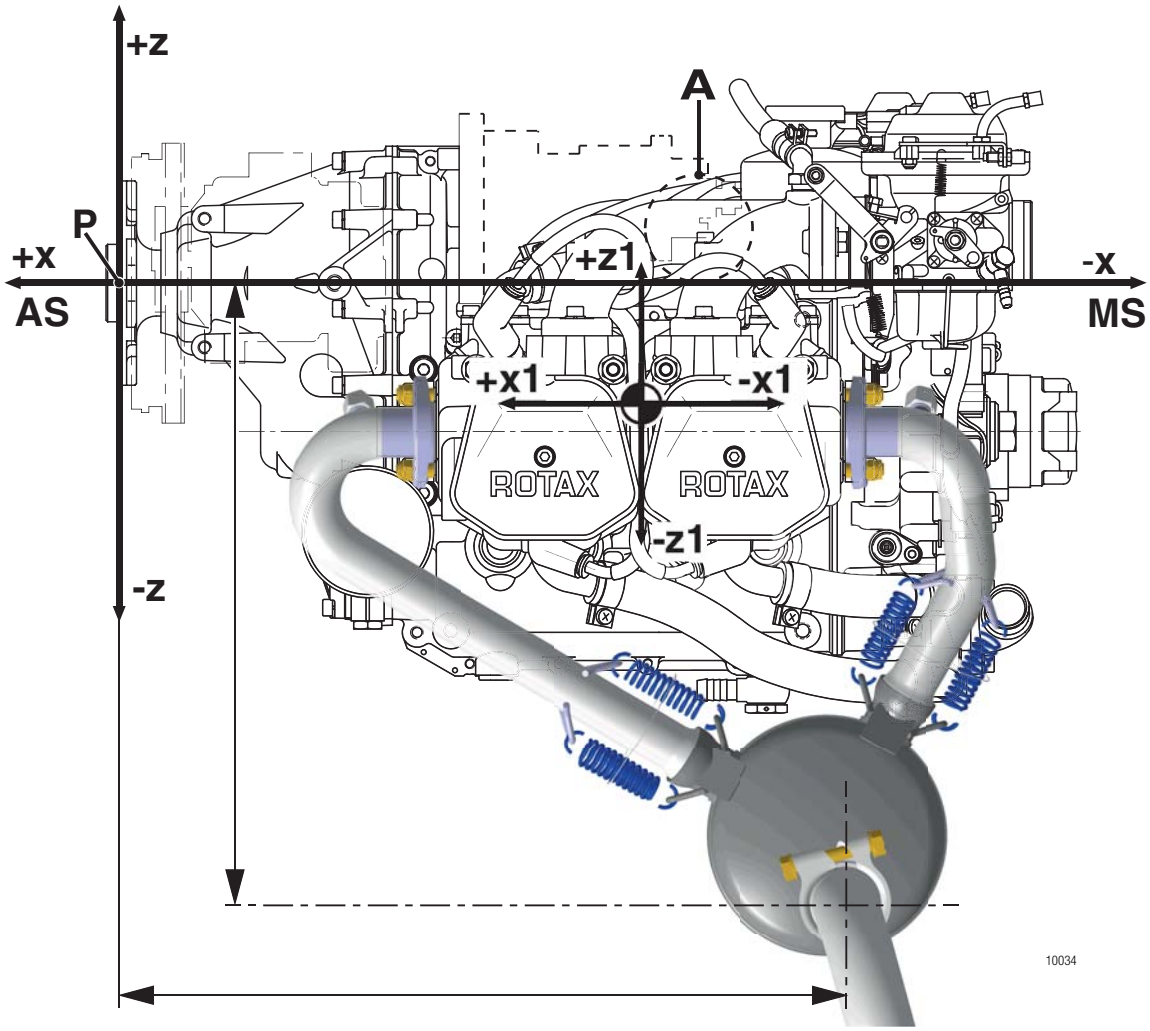

d06106.fm

4) Operating limits

Safety notes

See Fig. 4.

⚠ WARNING Non-compliance can result in serious injuries or death! The exhaust system must be designed and built such that the permissible operating temperatures are maintained and the max. exhaust gas temperatures are not exceeded.

NOTICE The performance specifications relate to ISA (15 °C) (59 °F)) conditions and are only achieved if the engine is equipped with an unmodified GENUINE-ROTAX exhaust system and airbox.

Readings of EGT

The exhaust gas temperatures (EGT) must be measured at the initial engine installation in an aircraft and verified in the course of test flights.

Readings of EGT taken approx. 100 mm (3.93 in) from exhaust flange connections.

Graphic

Readings of EGT

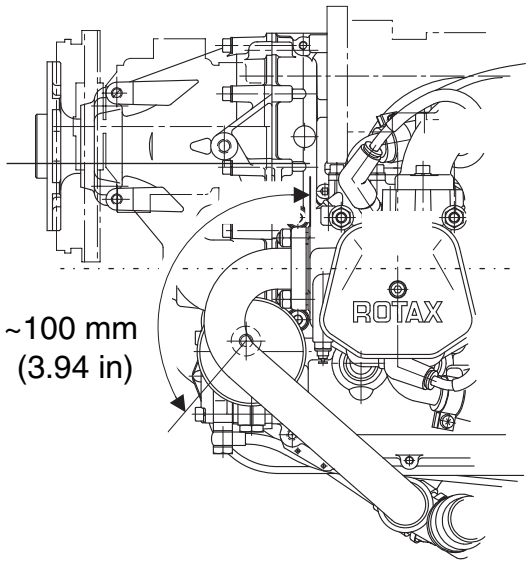

Fig. 4 *07131*

Values Exhaust gas temperature (EGT):
(both ignition circuits active)

- Nominal exhaust gas temperature:	800 °C (1470 °F)
	max. 850 °C (1560 °F)
- At take-off:	max. 880 °C (1616 °F)

4.1) Data for optional components of exhaust system

Weight See also chap. 72-00-00.

Graphic Exhaust elbow

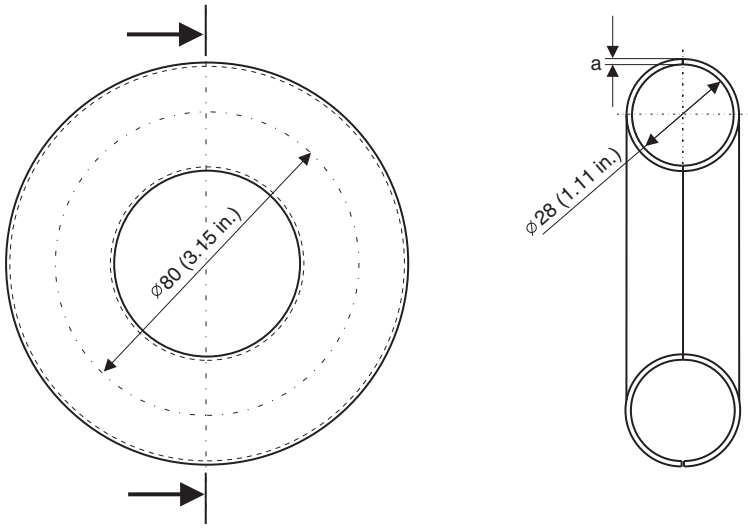

Material/thickness: X 15 CrNiSi20-12 (DIN 1.4828) (stainless steel) a = 1.5 mm (0.06 in).

Fig. 5 *09164*

d06106.fm

Graphic Muffler assy.

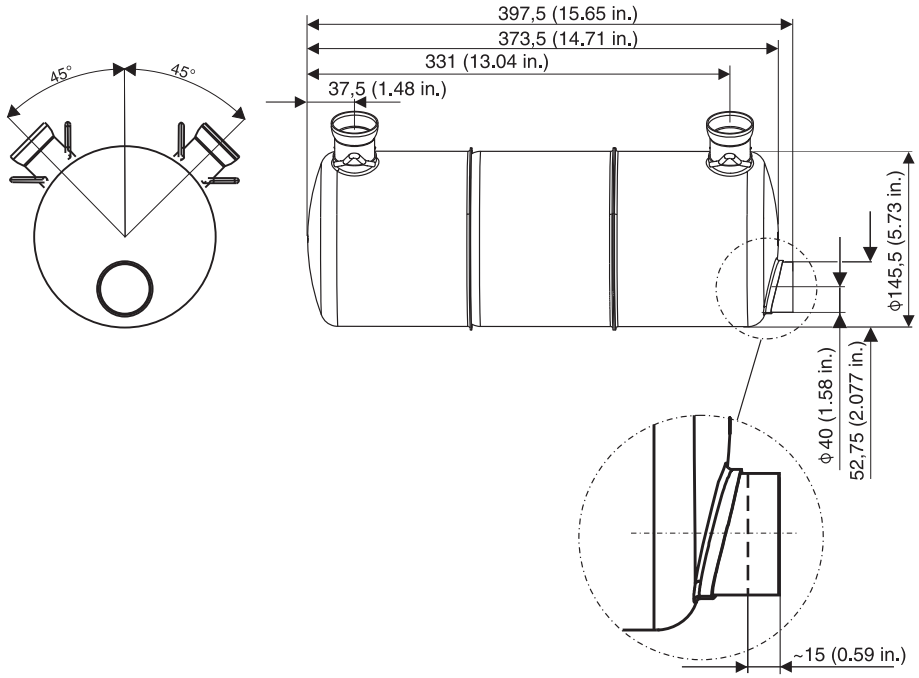

Material/thickness: X 6CrNiTi 189 (DIN 1.4541) (stainless steel) a = 1 mm (0.04 in).

Fig. 6 *09159*

Graphic Exhaust elbox (tailpipe)

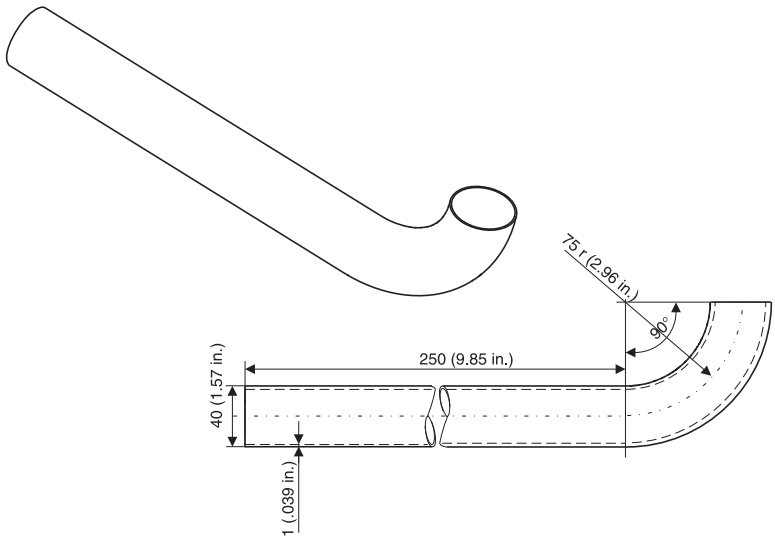

Material/thickness: X 5CrNi 189 (DIN 1.4301) (stainless steel) a = 1 mm (0.04 in).

Fig. 7 *09153*

d06106.fm

Graphic Ball joint, male

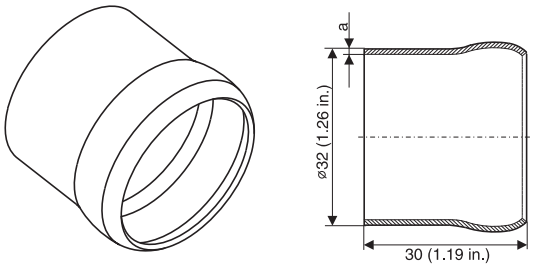

Material/-thickness: X 15CrNiSi 20, 12 (DIN 1.4828) (stainless steel) a = 1 mm (0.04 in).

Fig. 8 *09166*

Graphic Exhaust tube

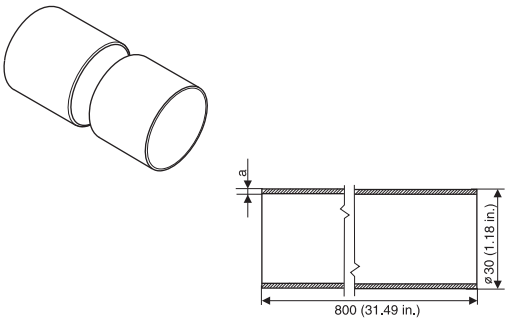

Material/-stärke: X 15CrNiSi 20, 12 (DIN 1.4828) (stainless steel) a = 1 mm (0.04 in).

Fig. 9 *09167*

Kapitel: 79-00-00

LUBRICATION SYSTEM

General note

See Fig. 1.

The ROTAX 912 Series is fitted with a dry sump forced lubrication system with a main oil pump with integrated pressure regulator and oil pressure sensor.

Table of contents

This section of the Installation Manual describes the system, operating limits and requirements for the lubrication system.

Subject	Page
Lubrication system (oil system)	Page 3
System description	Page 3
Operating limits	Page 4
Checking the oil circuit	Page 5
Measuring of the vacuum	Page 7
Oil and purging line requirements	Page 9
Connecting sizes and position of connections	Page 11
Oil circuit	Page 11
Oil tank	Page 15
Permissible position and location of the oil tank	Page 18
General notes on the oil cooler	Page 21
Permissible position and location of the oil cooler	Page 21
Capacity	Page 22
Purging the lubrication system	Page 23
Checking the hydraulic valve tappet for correct purging	Page 26
Replacement of components	Page 27
Data for optional components of lubrication system	Page 29
Oil cooler	Page 29
Variants of connectors	Page 29

NOTES

1) Lubrication system (oil system)

1.1) System description

Drive

See Fig. 1.

NOTE: The oil pump is driven by the camshaft.

The main oil pump sucks the engine oil from oil tank (1) via the oil cooler (4) and forces it through the oil filter to the individual points of lubrication (also lubricates the propeller governor).

The surplus oil emerging from the points of lubrication accumulates on the bottom of the crankcase and is forced back to the oil tank by the crankcase blow-by gases.

Purging

NOTE: The oil circuit is vented via nipple in the oil tank.

Connections

⚠ WARNING Non-compliance can result in serious injuries or death!
The oil cooler and its connections must be certified according to the latest regulations, such as FAR and EASA, by the aircraft or fuselage manufacturer.

Only the following connections need to be established to complete the lubrication system (oil system):

	Oil circuit, engine (main oil pump)
Connections from	Oil tank (outlet) to oil cooler
	Oil cooler to oil pump (inlet)
	Oil return to oil tank (inlet)
	Oil tank to purging line

NOTE: An oil tank is included with the standard engine version. No provision has been made for attachment of an oil cooler on the engine.

Graphic Oil system

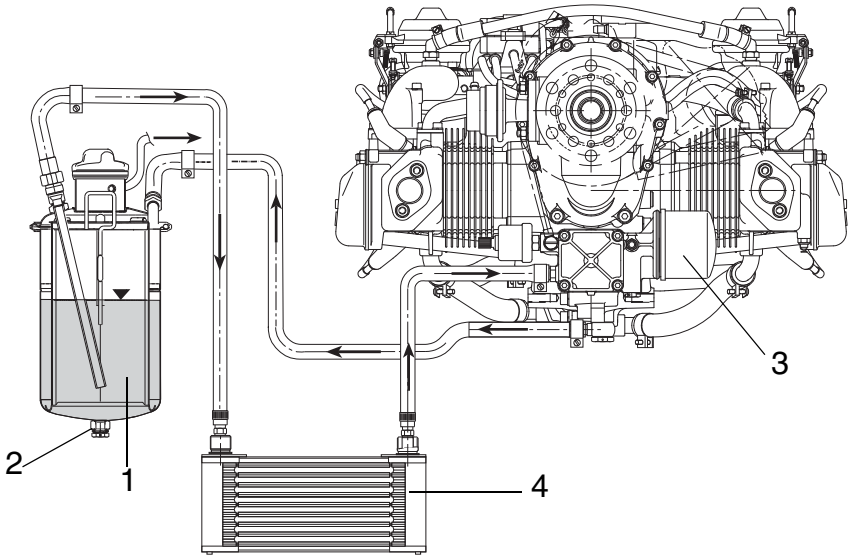

Part	Function
1	Oil tank
2	Oil drain screw
3	Oil filter
4	Oil cooler

Fig. 1 *08650*

1.2) Operating limits

General note

⚠ WARNING Non-compliance can result in serious injuries or death! The lubrication system must be designed such that the permissible operating temperatures and maximum values are not exceeded.

Operation limits	Manual
Oil pressure	See OM 912 Series, section. 2.1
Oil temperature	See OM 912 Series, section. 2.1

⚠ WARNING Non-compliance can result in serious injuries or death! At operation below nominal temperature, formation of condensate in the oil system might negatively affect oil quality.

Low temperatures

NOTE: When operating at low temperatures, installation of an oil thermostat, parallel to the oil cooler is highly recommended.

⚠ WARNING Non-compliance can result in serious injuries or death!
If an oil thermostat is being used and the ambient temperature is low, there is a possibility that the oil may congeal briefly when in a steep descent flight. Pay extra attention to the oil pressure and oil temperature during these abnormal conditions. If necessary, revert to a cruising or climb situation.

Advantages: safe oil pressure after cold start, prevention of fuel and water accumulation in the oil.

See SL-912-011 “Use of an oil thermostat“, latest issue.

1.3) Checking the oil circuit

General note

NOTE: The required pressure gauges and connection parts are not included in the BRP-Powertrain delivery.

To check the oil circuit for correct function, the following readings have to be taken with the engine running:

Measurement of crankcase pressure

See Fig. 2.

Measurement of the mean crankcase pressure at full throttle, this ensures correct oil return from crankcase (blow-by gas).

NOTICE Do not remove the magnetic plug for prolonged periods nor during flight operations.

A pressure sensor (1) (pressure gauge with liquid damping) can be fitted instead of the magnetic plug (2) or the crankshaft locking screw (3). The magnetic plug (2) or the crankshaft locking screw (3) is removed and the pressure sensor (1) is fitted.

Graphic Measurement of crankcase pressure

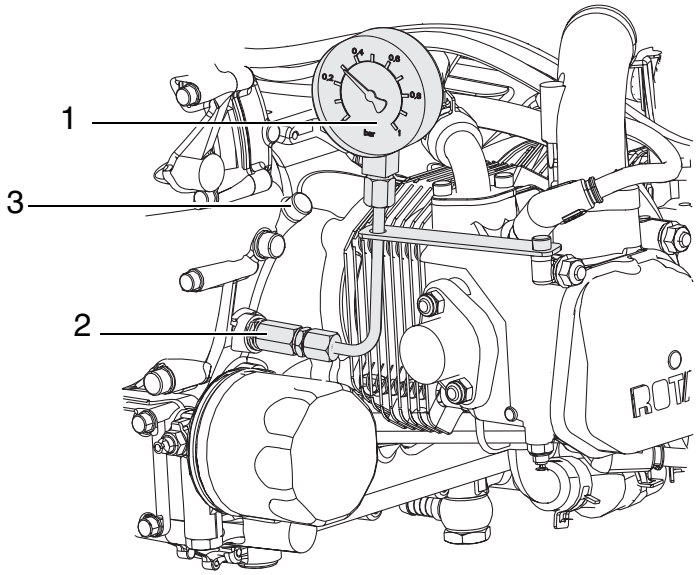

Part	Function
1	Pressure indicator
2	Magnetic plug
3	Crankshaft locking screw

Fig. 2 09161

Magnetic plug

NOTE: The thread for the magnetic plug (2) must be M12x1.5 (metric) and M8 for the crankshaft locking screw (3) (use always new gasket).

Pressure values

The pressure in the crankcase at (full throttle) must not exceed the prevailing ambient pressure by more than 0.45 bar (6.53 psi) at 90 °C (194 °F) oil temperature.

⚠ WARNING Non-compliance can result in serious injuries or death! If the readings exceed the pressure limits, then the flow resistance in the oil return line from oil sump to oil tank is too high in the current engine installation (contamination, restrictions of cross-section, etc.). This condition is unsafe and must be rectified immediately.

If crankcase pressure and measuring pressure of the vacuum readings and all operational data (flight attitude, temperatures, etc.) are within the specified limits, then it can be assumed that the oil circuit is working correctly.

d04927.fm

1.4) Measuring of the vacuum

Measuring of the vacuum

See Fig. 3.

Measure the vacuum in the suction oil line (1) - from the oil tank via the oil cooler to the engine oil pump - at a distance of max. 100 mm (4 in.) from the oil pump suction connector (2).

At full throttle, the indicated vacuum (3) upstream of the oil pump must not be less than 0.3 bar (4.35 psi), otherwise the oil hose (1) could collapse and block the oil supply to the engine.

⚠ WARNING

Non-compliance can result in serious injuries or death!
The vacuum (3) (pressure gauge with liquid damping) must be verified over the complete engine operation range. If the oil is cold, the flow resistance increases, which means that not enough oil will flow on the suction side.

Graphic Measuring of the vacuum

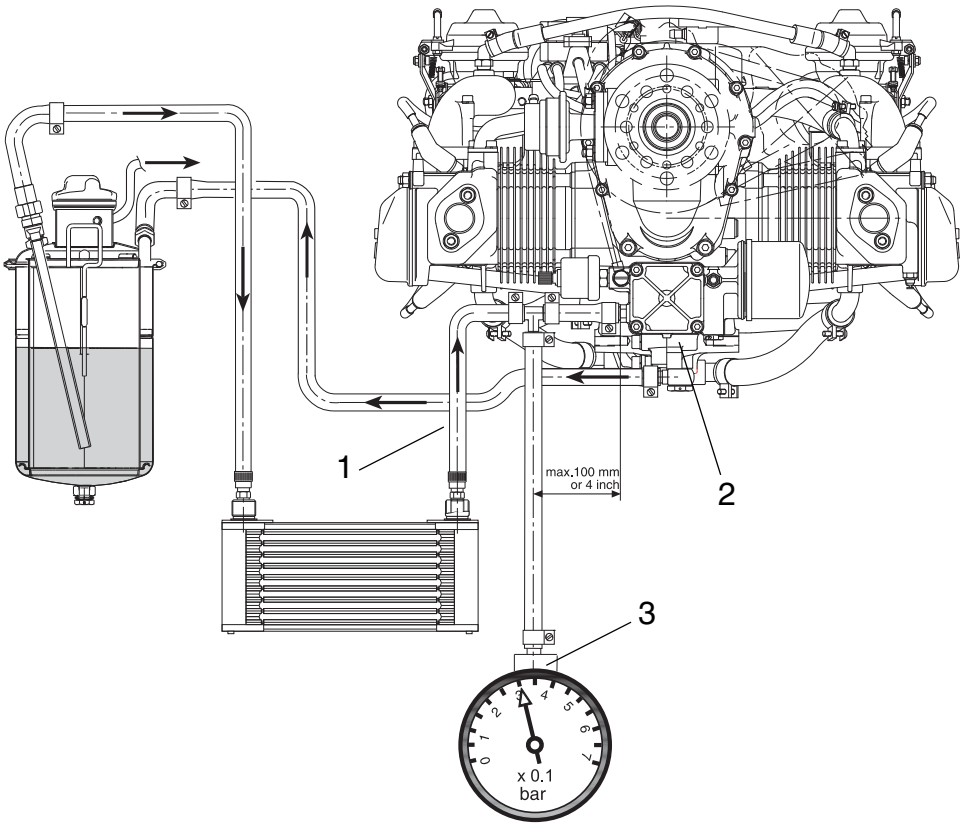

Part	Function
1	Suction oil line
2	Oil pump
3	Pressure gauge

Fig. 3 *08324*

1.5) Oil and purging line requirements

Oil lines

Oil circuit, engine (main oil pump)

- Temperature durability: min. 140 °C (284 °F)
- Pressure durability: min. 10 bar (73 psi.)
- Bending radius: min. 70 mm* (2.76 in.)

  * unless otherwise stated by the hose manufacturer
- Minimum inner dia. of oil lines in relation to total length

  up to 1 m (39.37 in.) inner diameter minimum 11 mm (0.43 in.)

  up to 2 m (78.74 in.) inner diameter minimum 12 mm (0.47 in.)

  up to 3 m (118.11 in.) inner diameter minimum 13 mm (0.51 in.)
- Length of individual oil line: max. 3 m (9.84 ft.)

Purging line

Purging line of oil tank

See Fig. 4.

- Route the line without kinks and avoid sharp bends.

NOTE: Water is a by-product of the combustion of fuel. Most of this water will dissipate from the combustion chamber with the exhaust gases.

A small amount will reach the crankcase and must be disposed of through the purging line.

- The purging line must be routed in a continuous decline or furnished with a drain bore at its lowest point to drain any condensate.
- The purging line must be protected from any kind of ice formation from condensation, e.g. insulation protection or routing in a hose with hot air flow and furnishing the vent line with a bypass opening (1) before the cowling outlet (2).

Graphic Purging line

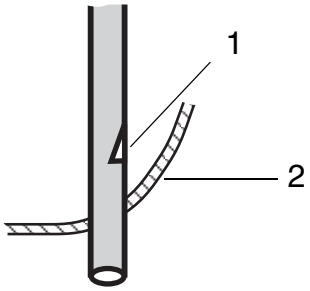

Part	Function
1	Bypass opening
2	Outlet through the cowling

Fig. 4 *04874*

2) Connecting sizes and position of connections

General note

NOTICE Utilize the full slip-on length for all connections. Secure hoses with suitable screw clamps or crimp connections..

NOTE: The oil line connections are optionally available as UNF threads (AN-8).

2.1) Oil circuit (engine)

General note

See Fig. 5.

Depending on engine configuration, the oil feed line connectors may vary:

- 912 A/F/S: Thread M18 - optional UNF-thread (AN-8)
- 912 UL/ULS: Inlet nipple - optional M18 or UNF-thread (AN-8)

Oil pump (inlet)

Connection variant 1:

Oil pump (inlet)	
Thread	M18x1,5x11
Tightening torque of inlet line	25 Nm (18.5 ft.lb)

NOTE: Suitable for use of a swivel joint.

Graphic

Oil pump-inlet

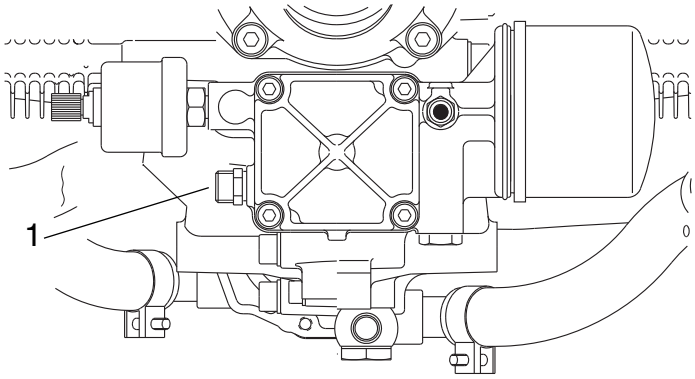

Part	Function
1	Oil pump (inlet)

Fig. 5 09123

d04927.fm

Oil pump (inlet nipple)

Connection variant 2:

Oil pump (inlet)	
Inlet nipple (2) outside dia	13.2 mm (0.52 in)
Slip-on length	Max. 21 mm (0.83 in)

Graphic

Oil pump-inlet nipple

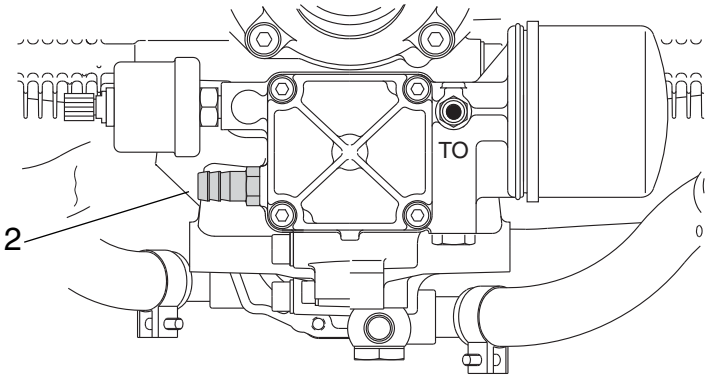

Part	Function
2	Inlet nipple

Fig. 6 *08633*

Oil pump (inlet)

Connection variant 3:

Oil pump (inlet)	
Thread (3)	3/4-16 UNF (AN-8)
Tightening torque of inlet line	25 Nm (18.5 ft.lb)

Graphic

Oil pump-inlet

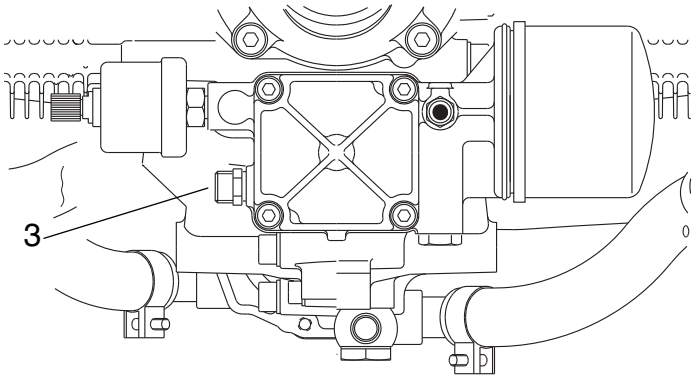

Part	Function
3	Oil pump (inlet)

Fig. 7 *08633*

d04927.fm

Oil return

See Fig. 8

NOTICE

The engine design is for a conventional, non-aerobatic, tractor or pusher configuration with the oil return port in the optimum position. Assuming these points are taken into consideration, the engine will be properly lubricated in all flight profiles. Aircraft that are not conventional (e.g. airships, gyrocopters, dive brake equipped aircraft, etc.) that require engine load at steep inclination angles may have special lubrication requirements.

Select the appropriate connection for the oil return line according to the propeller configuration and oil system layout.

- Position **1** for tractor or position
- Position **2** for pusher configuration

Connector option

Connector option (1), (2) and (5). See Fig. 8.

Option 1: Connection with slip-on connection.

Connection with slip-on connection (1)	
Hose nipple (3)	10 DIN 7642
Outside dia.	13.5 mm (.53 in)
Slip-on length	Max. 24 mm (max. .94 in)
Tightening torque of banjo bolt (4) M16x1.5x28.	30 Nm (22 ft.lb)

Option 2 and 3

Option 2 and 3: Connection with adaptor (2) or (5).

Connection with adaptor (2)	
Thread	3/4-16 UNF (AN-8)
Tightening torque of oil return line.	25 Nm (18.5 ft.lb)
Tightening torque of screw connection (2) M16x1.5.	25 Nm (18.5 ft.lb)

Connection with screw connection (5)	
Thread	3/4-16 UNF (AN-8)
Tightening torquet of oil return line.	25 Nm (18.5 ft.lb)
Tightening torque of banjo bolt (4) M16x1.5x28.	30 Nm (22 ft.lb)

Graphic Connection

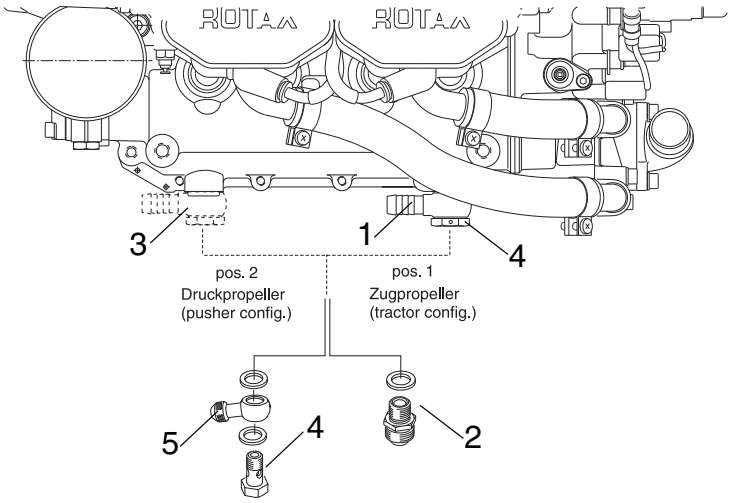

Part	Function
1	Slip-on connection
2	Adaptor 3/4-16 UNF (AN-8)
3	Hose nipple 10 DIN 7642
4	Banjo bolt M16x1.5x28
5	Screw connection

Fig. 8 *08634*

d04927.fm

2.2) Oil tank

Connection

See Fig. 9 and Fig. 10.

NOTICE Only use the oil tank provided in the scope of delivery, as its design has changed compared with older tanks.

NOTE: Optional extra:
Nipple either straight or with 90° elbow. Metric M18x1.5 or UNF 3/4-16 thread

NOTICE Check what type of thread or connection there is on the supplied oil tank.

Connections for oil circuit (engine)

Graphic

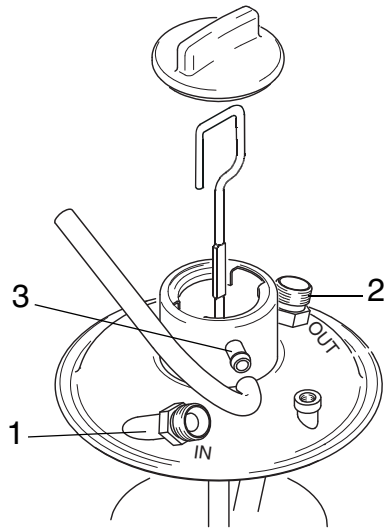

Part	Function
1	Oil feed line
2	Oil outlet
3	Purging nipple

Fig. 9 08246

d04927.fm

UNF-thread

- Oil feed line and outlet have UNF thread (AN-8) (optional):

Screw connection (optional)	
Thread	3/4-16 UNF (AN-8)
Tightening torque of oil inlet and outlet	25 Nm (18.5 ft.lb)

NOTICE

The oil tank cover is also marked with the designations
IN- oil return line from crankcase
OUT- outlet to oil cooler/oil pump.

Purging nipple

Purging nipple:

Purging nipple	
Outer dia.	8 mm (.31 in)
Slip-on length	Max. 15 mm (.59 in)

Bent socket 90° optional

part no. 956580

Bent socket 90° / M18x1.5	
Outer dia.	12 mm (0.47 in.)
Slip-on length	max. 24 mm (0.94 in.)
Tightening torque	25 Nm (18.44 ft.lb.)

Nipple optional

part no. 956610

Nipple with cap nut / straight	
Outer dia.	12 mm (0.47 in.)
Slip-on length	max. 24 mm (0.94 in.)
Tightening torque	25 Nm (18.44 ft.lb.)

Graphic Oil tank

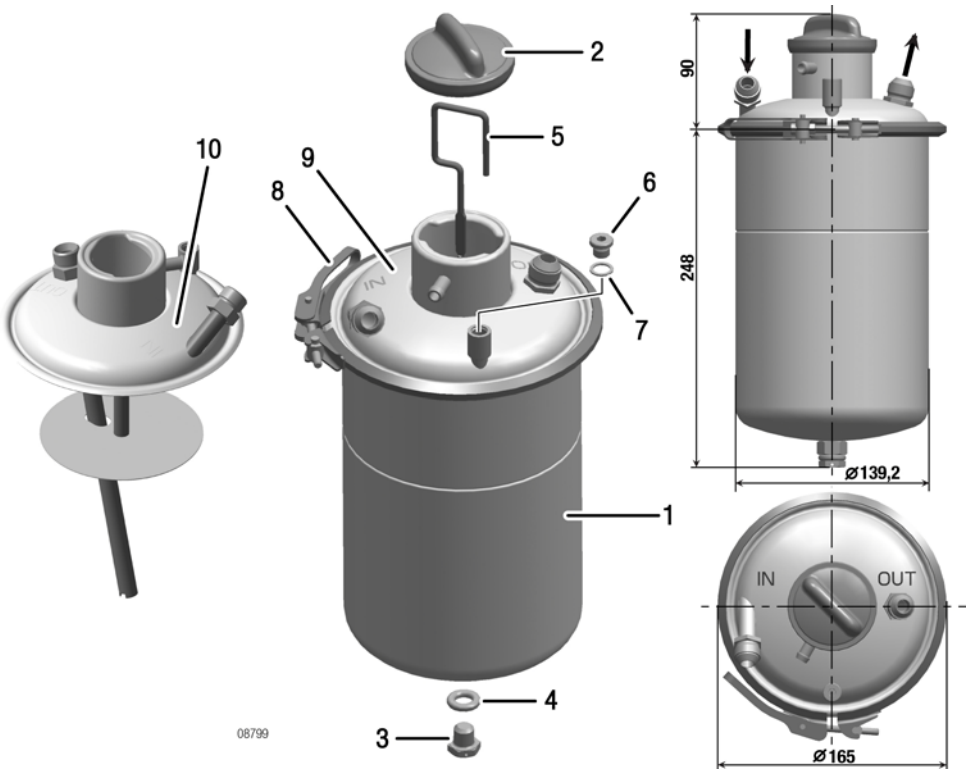

Part	Function
1	Oil tank
2	Bayonet cap
3	M12x12 hex. screw
4	C12x18 gasket ring
5	Oil dipstick
6	M10x1 plug screw
7	A10x14 gasket ring
8	Profile clamp 163
9	Oil tank cover assy. (UNF 3/4-16)
10	Oil tank cover assy. (metric M18x1.5)

Fig. 10 *08799*

NOTICE If the lines are connected incorrectly, the engine will not be lubricated and the engine will be damaged very quickly!

2.3) Permissible position and location of the oil tank

Position and location

See Fig. 11.

- The longitudinal axis z3 must be parallel to z-axis of the system of coordinates.

Permissible deviation from parallel: ±10°

NOTE: This applies to both planes..

⚠ WARNING Non-compliance can result in serious injuries or death! If the oil tank is located higher, oil might trickle through bearing clearances into the crankcase during longer periods of engine stop. If fitted too low it might damage the oil circuit.

- The oil tank (1) must be positioned on its z-axis such that the normal oil level (2) is always between 0 and -400 mm (-15.75 in) on the y-axis.

NOTE: If the profile clamp of the oil tank is 360 mm (14.17 in.) below the propeller shaft, then the oil in the oil tank is at the same level as the oil pump. This is the ideal position for the oil tank.

- Install the oil tank free of vibrations and not directly to the engine.
- Bayonet cap (3) and oil drain screw (4) must be easily accessible.

Graphic Position and location of the oil tank and oil cooler

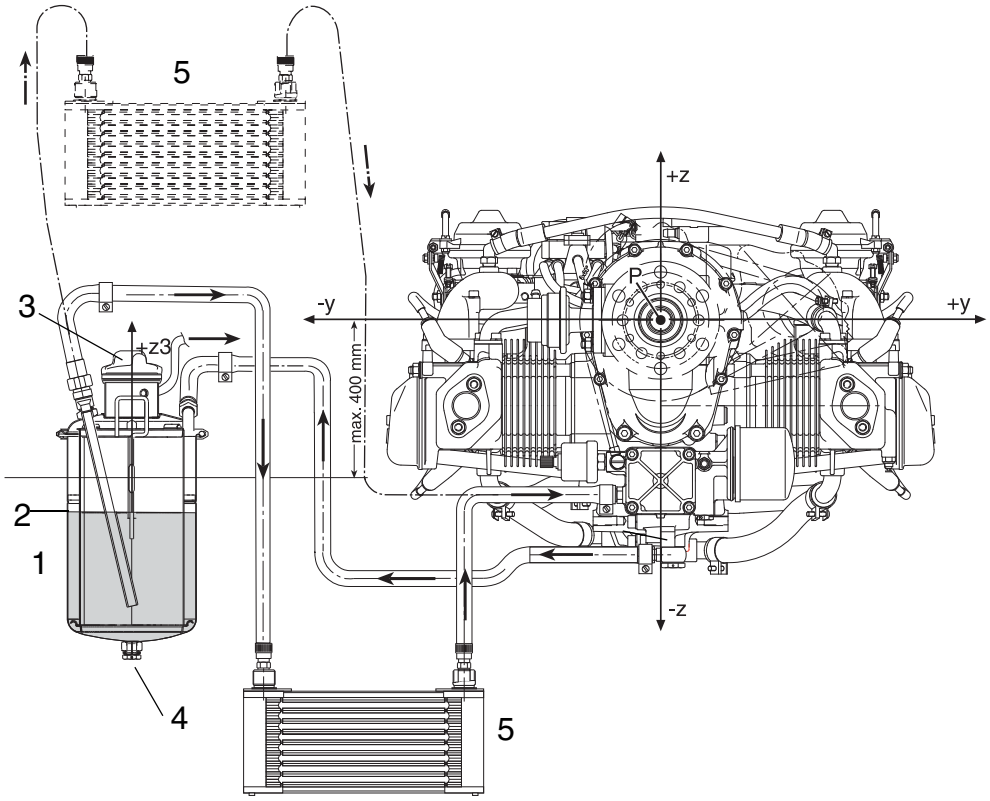

Part	Function
1	Oil tank
2	Oil level
3	Bayonet cap
4	Oil drain screw
5	Oil cooler

Fig. 11 *09162*

NOTES

3) General notes on oil cooler

General note

An oil cooler is available for this engine from BRP-Powertrain (see Illustrated Parts Catalog).

⚠ WARNING

Non-compliance can result in serious injuries or death!
Certification according to the latest regulations, such as FAR or EASA, must be conducted by the aircraft or fuselage manufacturer.

NOTICE

The oil cooler must be designed to dissipate approx. 10 kW (7.58 BTU/s) of thermal energy at take-off performance.

NOTICE

The oil cooler must not restrict oil flow. Test system as per chap. 79-00-00 section 1.3.

NOTE: Experience has shown that an oil cooler of at least 160 cm^2 (25 in^2) is required, provided that air flow is adequate.

3.1) Permissible position and location of the oil cooler

Installation

See Fig. 11.

⚠ WARNING

Non-compliance can result in serious injuries or death!
The oil cooler must be designed and installed such that the permissible operating temperatures are maintained and that these do no exceed or fall below the maximum values.
This must also apply to "hot day conditions".
If need be, take appropriate measures such as changing the size of the oil cooler, partially covering the cooler, etc.

- The oil cooler should always be installed below the engine oil pump.

NOTICE

The oil cooler must be installed with the radiator caps pointing upwards i.e. in positive direction on the z-axis.

- If this position is not practical, also install the oil cooler with the radiator caps pointing upwards, i.e. in positive direction on the z-axis.

NOTICE This will prevent unintentional draining of the oil cooler during longer periods of engine stop.

3.2) Capacity

Oil tank

- Capacity without oil cooler and connecting lines min. 3 l (0.8 USgal) depending on the respective installation.

Volume of oil tank	
Up to the MIN.-mark	2.5 l (0.66 US gal)
Up to the MAX.-mark	3.0 l (0.8 US gal)

- Perform oil level check and add oil if necessary.

3.3) Purging the lubrication system

Safety

See Fig. 12.

⚠ WARNING Risk of burns and scalds.
Hot engine parts.
Always allow engine to cool down to ambient temperature before starting work..

Introduction

Ensure that oil lines are connected correctly and secured and that the oil cooler (if fitted) is in the suction line (1) between the oil tank and the oil pump. Verify that the oil tank is filled up to the maximum level (to the top of the flat portion of the dipstick). Additional oil (up to 0.5 litre (0.13 USgal)) may be added to the tank for the purpose of this procedure.

Instruction

The following work procedures must be carried out:

NOTICE Incorrectly connected oil lines to the oil tank or to the engine will result in severe engine damage.

Step	Procedure
1	Disconnect oil return line (2) from the oil tank.
2	Place the free end (3) of the return line into a suitable container (4) below the engine.
3	Plug open connection (5) on oil tank with suitable air tight cap.
4	Remove the spark plug connectors.
5	For easier rotation of engine remove one spark plug from each cylinder. **NOTICE** Prevent any foreign objects entering through spark plug hole.
6	Using a compressed air line, pressurise the oil tank through its purging connection (6) (on the neck of the tank). Adjust the compressor outlet regulator so that the air line pressure is between 0.4 bar (5.8 psi) and 1 bar (14.5 psi). Do not exceed 1 bar (14.5 psi).

⚠ WARNING Non-compliance can result in serious injuries or death!
Do not remove the oil tank cover before ensuring that air pressure has been completely released from the tank.

NOTE: The bayonet cap is not pressure-tight, some air can escape.

The pressure in the oil tank has to be maintained during the following steps.

NOTICE The oil tank may empty and as a result introduce air into the oil system. Pay attention to the oil level and fill tank as required.

NOTICE Do not use the starter for this purpose. Fit propeller and use it to turn the engine.

7	Turn the engine by hand in direction of normal rotation until the first pressure indication appears on the oil pressure gauge. Normally this will take approx. 20 turns. Depending on installation it may take up to 60 turns.
8	Stop the pressurisation.
9	Open the cap (5) for the oil return line on the oil tank and reconnect the engine oil return line (2) to the tank. **NOTICE** Ensure that the suction oil line (1) and oil return lines (2) are connected to the proper fittings on the oil tank. If the oil lines from the engine to the oil tank are incorrectly connected, severe engine damage may result.
10	Refit the spark plug. Restore aircraft to original operating condition.
11	Residual oil may have accumulated in the crankcase. Return it to the oil tank by following the oil level check procedure in the relevant Operators Manual.
12	Fill the oil in the tank up to the full mark on the dipstick.

NOTICE Carefully check all lubrication system connections, lines and clamps for leaks and tightness.

ENVIRONMENT NOTE

Protect their environment. Observe to bury no oil!
Dispose of oil in an environmentally friendly manner.

Graphic Lubrication system.

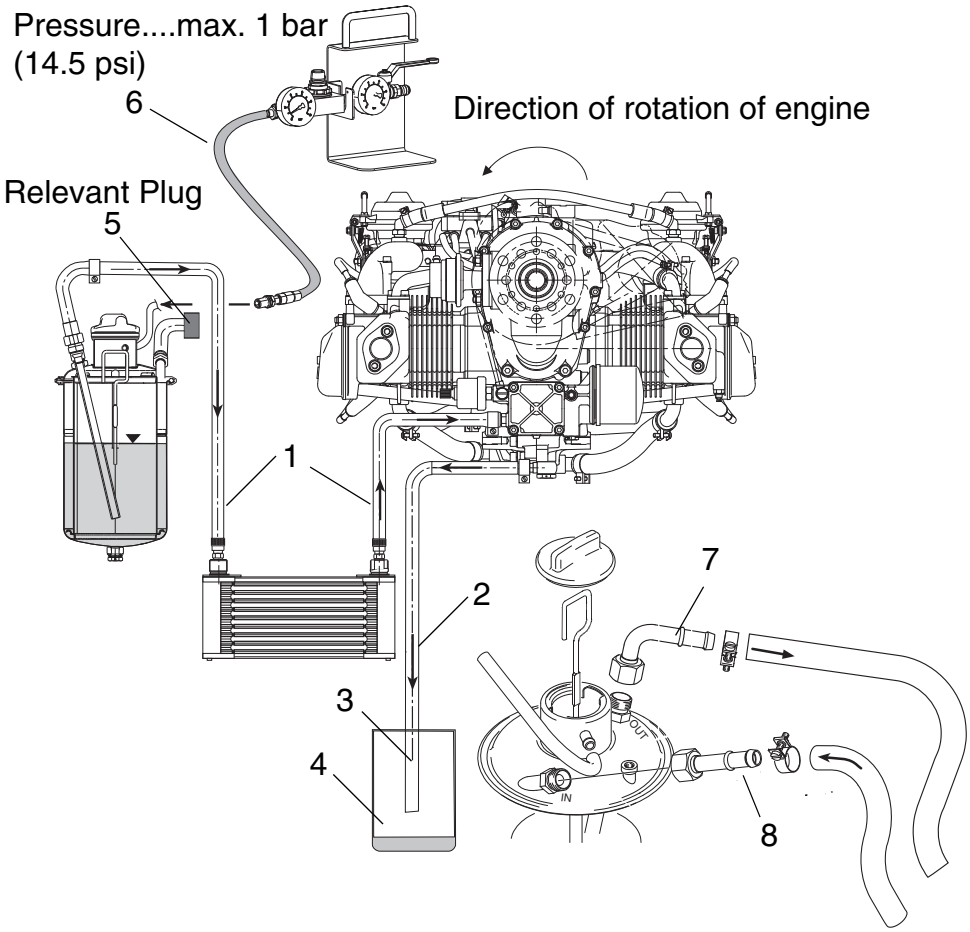

Part	Function
1	Suction line
2	Oil return line
3	Free end
4	Tank
5	Plug
6	Purging connection
7	To oil pump
8	Return from engine

Fig. 12 *09163,05448*

d04927.fm

3.4) Checking the hydraulic valve tappet for correct purging

General note

See Fig. 13.

⚠WARNING

Risk of burns and scalds.
Hot engine parts.
Always allow engine to cool down to ambient temperature before starting work.

The following check procedure describes the correct method for purging the hydraulic valve tappet.

Instruction

The following work procedures must be carried out:

Step	Procedure
1	Remove valve cover on cylinder 1.
2	Turn crankshaft in direction of normal rotation so that cylinder 1 is set to **top dead centre** ignition (both valves are closed).
3	Push down the rocker arm on the push-rod side with a force (F) of around 70 N (15.74 lbf) for about 3 seconds. You can using a belt tester, for example, to check approximately how much force is being exerted. Repeat on other rocker arms.
4	Check the size of the gap between the rocker arm and the valve contact surfaces. Max. permitted gap 0.5 mm (0.02 in.). ***NOTICE*** If it is possible to push the hydraulic valve tappet further than this limit, an additional engine run for about 5 min. at 3500 rpm, after refitting the valve covers, is required. In order to vent the hydraulic valve tappet, this process can be repeated another 2 times.
5	Repeat on all other cylinders.

Graphic Hydraulic valve tappet

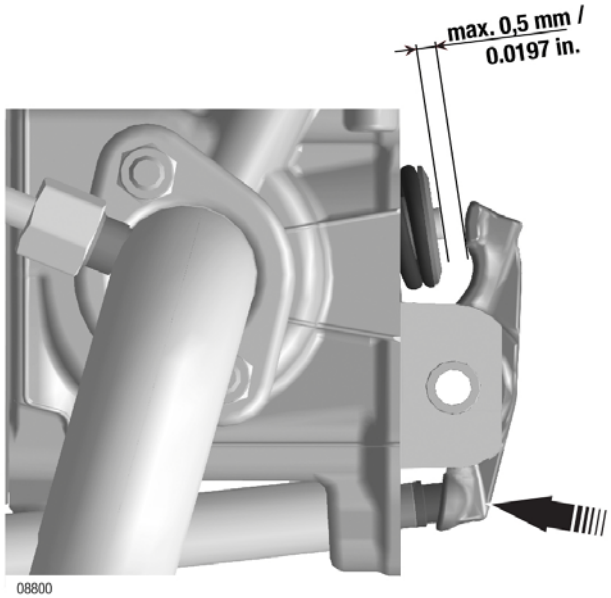

Fig. 13 *08800*

3.5) Replacement of components

General note If an hydraulic valve tappet still malfunctions after several engine runs, it must be replaced and the valve spring support must be inspected for wear.

Work procedures All work has to be performed in accordance with the relevant Maintenance Manual.

NOTES

4) Data for optional components of lubrication system

4.1) Oil cooler

General note See Fig. 14.

Weight See also chap. 72-00-00 section: weight.

4.1.1) Variants of connectors

General note

NOTICE Counter hold screw sockets when securing the oil lines.

UNF screw socket

UNF screw socket	
Thread	3/4-16 UNF (AN-8)
Tightening torque	22 Nm (16.23 ft.lb) and LOCTITE 648
Tightening torque of oil feed line and outlet	25 Nm (18.5 ft.lb)

Nipple 13.2/9.2

Nipple	
Outer dia.	13.2 mm (0.52 in)
Slip-on length	max. 21 mm (0.83 in)
Tightening torque	22 Nm (16.23 ft.lb) and LOCTITE 243

Metric screw socket

NOTICE Counter hold screw sockets when securing the oil lines.

Metric screw socket	
Thread	M18x1,5
Tightening torque	22 Nm (16.23 ft.lb) and LOCTITE 648
Tightening torque of oil feed line and outlet, bent socket or hose nipple	25 Nm (18.5 ft.lb)

Angular tube

Angular tube (90°)	
Outer dia.	13.2 mm (0.52 in)
Slip-on length	max. 21 mm (0.83 in)
Tightening torque	22 Nm (16.23 ft.lb) and LOCTITE 648

Bent socket

Bent socket 90°	
Outer dia.	12 mm (0.47 in)
Slip-on length	max. 24 mm (max. 0.94 in)
Tightening torque	25 Nm (18.5 ft.lb)

Hose nipple with cap nut (straight nipple)

Hose nipple with union nut	
Outer dia.	12 mm (0.47 in)
Slip-on length	max. 24 mm (max. 0.94 in)
Tightening torque	25 Nm (18.5 ft.lb)

Graphic Connection variants

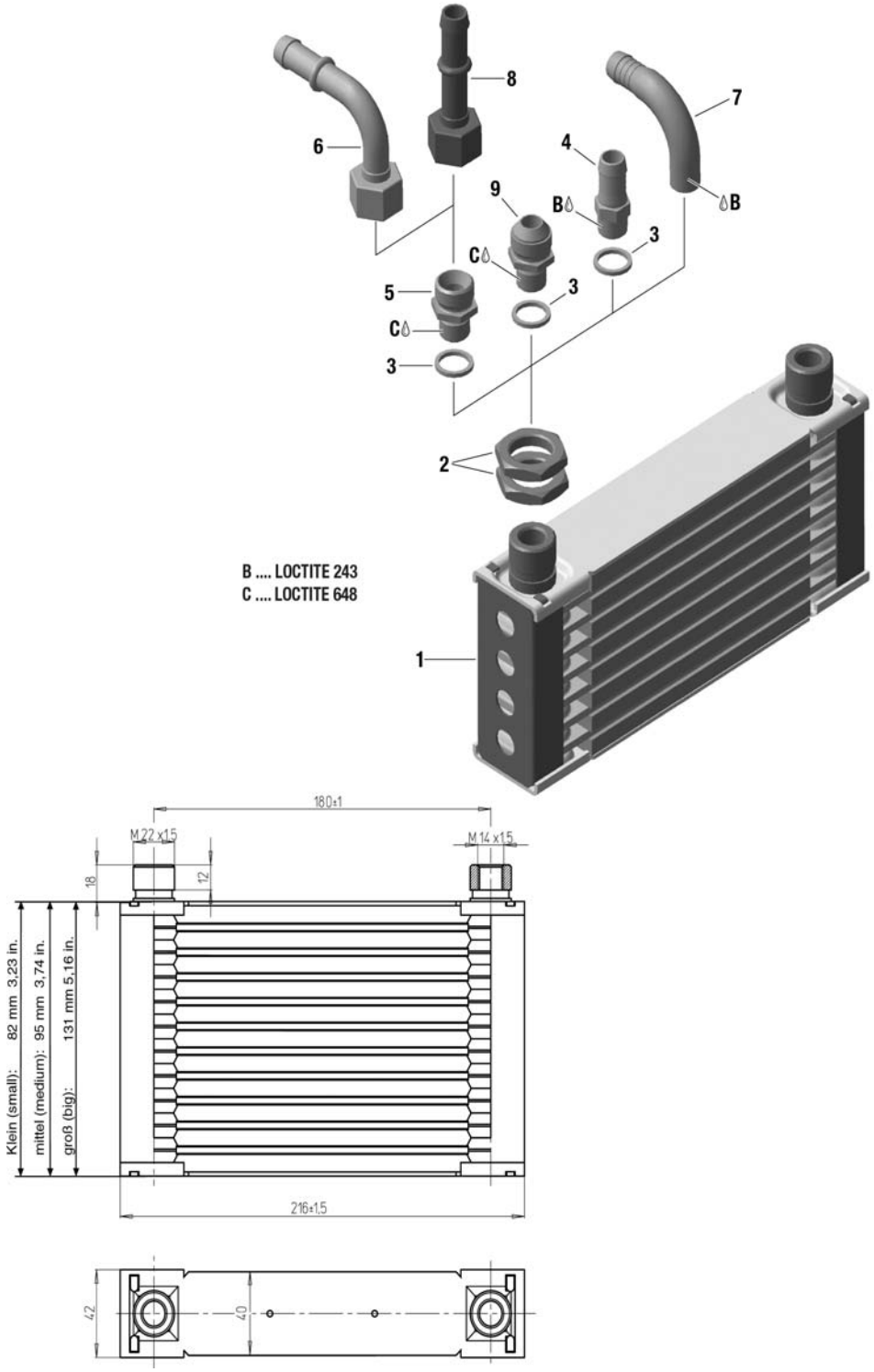

d04927.fm

Part	Function
1	Oil cooler
2	M22x1.5 hex. nut
3	Gasket ring 14.2/18/2
4	Nipple 13.2/9.5
5	M18x1.5/M14x1.5 screw socket
6	Bent socket assy.
7	M14x1.5 angular tube
8	Hose nipple with cap nut
9	3/4-16 UNF/M14x1.5 screw socket

Fig. 14 *08900*

Chapter: 80-00-00

ELECTRIC STARTER

General note

⚠ WARNING

Non-compliance can result in serious injuries or death!
When working on the electric starter assy., there is a risk of short circuit and electrical fault.
All installation work on the electric starter assy. must be carried out with engine switched off and the battery (negative terminal) disconnected.
Ignition, main switches must be set to OFF.

Table of contents

This section of the Installation Manual contains the electric starter of the aircraft engine.

Subject	Page
Electric starter	Page 3
Power supply wires from starter relay to the electric starter	Page 3
Starter relay assy. technical data	Page 4

Overview Electric starter

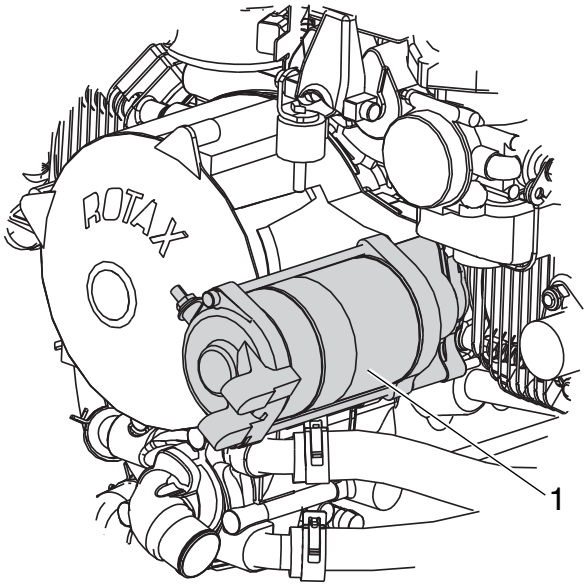

Part	Function
1	Electric starter

Fig. 1 *05900*

1) Electric starter

General note

NOTICE Suitable for short starting periods only.

NOTICE Max. 80 °C (176 °F) ambient temperature by the electric starter housing. Activate starter for max. 10 sec. (without interruption), followed by a cooling period of 2 minutes!

1.1) Power supply wires from starter relay to the electric starter

Cross section

At least 16 mm² (2.48 in²).

Output

0.7 kW (0.9 kW optional)

Connection

See Fig. 2.

Plus terminal (2): M6 screw connection (tightening torque 4 Nm (36 in.lb)) suitable for cable terminals according to DIN 46225 (MIL-T-7928; PIDG or equivalent).

Graphic

Connection

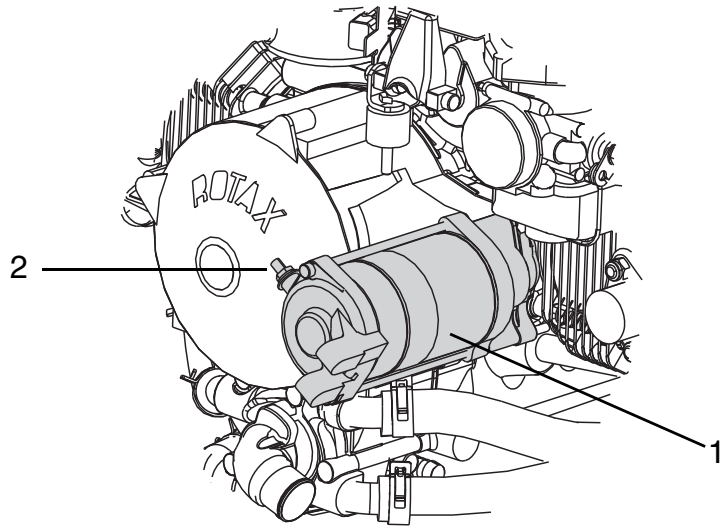

Part	Function
1	Electric starter
2	Plus terminal

Fig. 2 00545

Grounding

Grounding cable via engine block.

1.2) Starter relay assy. technical data

General note	See Fig. 3. **NOTICE** Activation of starter relay limited to short duration. The duty cycle over an interval of 4 minutes is 25%.
Nominal voltage	- 12 V/DC
Control voltage	- Min. 6 V - Max. 18 V
Switching current	- Max. 75 A 8 (permanent) - Max. 300 A/1 sec. (short duration)
Ambient temperature range	Ambient temperature range: - Min. -40 °C (-40 °F) - Max. +100 °C (212 °F)
Weight	See chap. 72-00-00 section: Technical data.
Connections	**Main current connections (1):** M6 screw connection (tightening torque 4 Nm (36 in.lb.)) suitable for cable terminals according to DIN 46225 (MIL-T-7928; PIDG or equivalent). **Control wiring (2):** 6.3x0.8 plug connector suitable for Faston connector (female) according to DIN 46247 (MIL-T-7928; (PIDG) or equivalent).

Graphic Starter relay

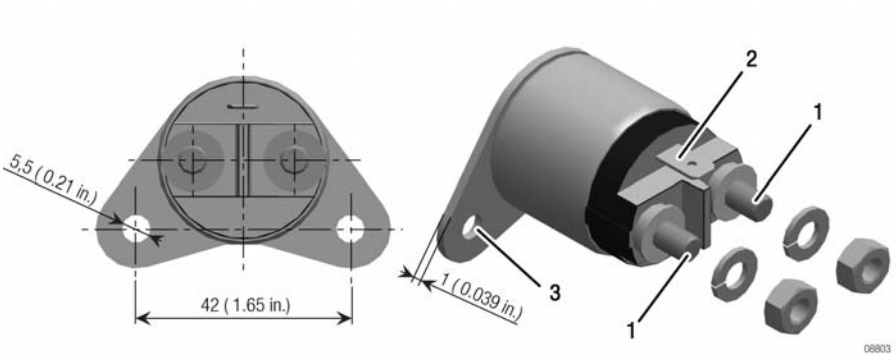

Part	Function
1	Main current connections
2	Control wiring
3	Ground

Fig. 3

NOTES

ROTAX®
AIRCRAFT ENGINES

www.abm.at

Motornummer / Engine serial no.

Flugzeugtype / Type of aircraft

Flugzeugkennzeichen / Aircraft registration no.

ROTAX® Vertriebspartner ROTAX® authorized distributor

WWW.FLYROTAX.COM

® and TM are trademarks of BRP-Powertrain GmbH & Co KG. © 2011 BRP-Powertrain GmbH & Co KG. All rights reserved