ROTAX® AIRCRAFT ENGINES

MAINTENANCE MANUAL

(HEAVY MAINTENANCE) FOR ROTAX® ENGINE TYPE 912 AND 914 SERIES

ref. no.: MMH-912 / MMH-914 | part no.: 899603

picture l./r.: ROTAX® 912 ULS / ROTAX® 914 UL with options

⚠ WARNING

Before starting any maintenance work, please read the Maintenance Manual completely as it contains important safety relevant information.

These technical data and the information embodied therein are the property of BRP-Powertrain GmbH & Co KG, Austria, acc, BGBl 1984 no. 448, and shall not, without prior written permission of BRP-Powertrain GmbH & Co KG, be disclosed in whole or in part to third parties. This legend shall be included on any reproduction of these data, in whole or in part.

Copyright 2015 © - all rights reserved.

ROTAX® is a trade mark of BRP-Powertrain GmbH & Co KG. In the following document the short form of BRP-Powertrain GmbH & Co KG = BRP-Powertrain is used.

Other product names in this documentation are used purely for ease of identification and may be trademarks of the respective company or owner.

Approval of translation has been done to best knowledge and judgement - in any case the original text in German language is authoritative.

SECTION 00

INTRODUCTION

1) Table of contents

SECTION 00
INTRODUCTION

1) Table of contents ..... 00-00-00 / 3
2) List of chapters ..... 00-00-00 / 5
3) Index ..... 00-00-00 / 7
4) List of the valid pages ..... 00-00-00 / 11
5) Table of amendments ..... 00-00-00 / 19
6) General note ..... 00-00-00 / 23
7) Safety notice ..... 00-00-00 / 25
   7.1) Repeating symbols ..... 00-00-00 / 25
8) Technical documentation ..... 00-00-00 / 27
   8.1) Filling in the dimension sheets ..... 00-00-00 / 27
   8.2) List of abbreviations ..... 00-00-00 / 28
9) Classification of parts for maintenance/repair ..... 00-00-00 / 29
   9.1) Determination of actual wear [%] ..... 00-00-00 / 32
10) Maintenance ..... 00-00-00 / 35
   10.1) Trouble shooting ..... 00-00-00 / 35
   10.2) Tightening torques ..... 00-00-00 / 35
   10.3) Consumable materials ..... 00-00-00 / 36
   10.4) Auxiliary tools ..... 00-00-00 / 39
   10.5) Measuring tools ..... 00-00-00 / 41
   10.6) Special tools and devices ..... 00-00-00 / 42

d02620

NOTES

d02620

2) List of chapters

INTRODUCTION 00
POWER PLANT 71
ENGINE 72
FUEL SYSTEM 73
IGNITION SYSTEM 74
COOLING SYSTEM 75
ENGINE CONTROL 76
EXHAUST SYSTEM AND TURBOCHARGER .. 78
LUBRICATION SYSTEM 79
ELECTRIC STARTER 80

d02620

NOTES

d02620

3) Index

A

Airbox temperature 76-00-00 / 9
Alternators 74-00-00 / 3
Auxiliary tools 00-00-00 / 37

B

Boost pressure display 73-00-00 / 16
Bowden cable 78-00-00 / 19

C

Carburetor assembly 73-00-00 / 53
Carburetor disassembly 73-00-00 / 19
Carburetor heat systems 73-00-00 / 16
Carburetor individual components 73-00-00 / 23, 73-00-00 / 24
Carburetor socket assembly 73-00-00 / 53
Carburetor socket disassembly 73-00-00 / 17, 73-00-00 / 19
Carburetor synchronization 73-00-00 / 33
Caution lamps inspection 76-00-00 / 34
Charging coil 74-00-00 / 14
Choke 73-00-00 / 31
Classification of parts 00-00-00 / 29
Cleaning agents 00-00-00 / 38
Communication program 76-00-00 / 13
Components 71-00-00 / 5
Compressor pressure ratio 76-00-00 / 10
Constant depression carburetor 73-00-00 / 12, 73-00-00 / 21
Consumable materials 00-00-00 / 36
Coolant hoses fitting 75-00-00 / 14
Cooling air duct 75-00-00 / 14
Cut-in speed 74-00-00 / 18
Cyl. head assembly 72-00-00 / 73, 72-00-00
Cyl. head temperature sensor 75-00-00 / 15
Cylinder designation 71-00-00 / 5
Cylinder head disassembly 72-00-00 / 57
Cylinder head fitting 72-00-00 / 92
Cylinder head removal 72-00-00 / 55
Cylinders assembly 72-00-00 / 86
Cylinders inspection 72-00-00 / 81
Cylinders removal 72-00-00 / 75

D

Description of design 71-00-00 / 3
Diaphragms 73-00-00 / 25
Disc spring pretension 72-00-00 / 51
Drain plug 79-00-00 / 10
Drip tray disassembly 73-00-00 / 17
Dual ignition coil 74-00-00 / 17

E

Electric starter 80-00-00 / 3
Electric starter installation 80-00-00 / 12
Electric starter dismantling 80-00-00 / 5
Electric starter inspection 80-00-00 / 9
Electric starter diassembly 80-00-00 / 11
Electronic module 74-00-00 / 14
Engine components 71-00-00 / 12
Engine views 71-00-00 / 5
Exhaust gas temperature display 78-00-00 / 5
Exhaust system assembly 78-00-00 / 15
Exhaust system inspection 78-00-00 / 11
Exhaust system disassembly 78-00-00 / 7
Exhaust turbocharger 78-00-00 / 3

F

Filter oil 00-00-00 / 36
Float bracket 73-00-00 / 28
Float housing 73-00-00 / 27
Float needle valve inspection 73-00-00 / 30
Floats 73-00-00 / 27
Fly wheel hub 72-00-00 / 9, 74-00-00 / 49
Fuel filter 73-00-00 / 7
Fuel handling 73-00-00 / 15
Fuel lines 73-00-00 / 40, 73-00-00 / 43
Fuel lines assembly 73-00-00 / 55, 73-00-00 / 58
Fuel lines disassembly 73-00-00 / 17, 73-00-00 / 19
Fuel pressure 73-00-00 / 35, 37
Fuel pressure regulator 73-00-00 / 44
Fuel pump 73-00-00 / 45, 73-00-00 / 47

G

Gear set inspection 72-00-00 / 44
Gearbox configurations 72-00-00 / 5
Gearbox parts inspection 72-00-00 / 39
Governor 72-00-00 / 7
Governor drive removal 72-00-00 / 33

H

Heat conduction compound 00-00-00 / 37
Hose clamps 75-00-00 / 14
Hourmeter 72-00-00 / 8
Hydraulic valve tappets 72-00-00 / 83

I

Idle speed adjustment 73-00-00 / 33
Ignition 74-00-00 / 3, 74-00-00 / 6
Ignition cables 74-00-00 / 9
Ignition check 74-00-00 / 21
Ignition circuits inspection 74-00-00 / 21
Ignition electric set reassembly 74-00-00 / 41

d04774

Ignition electric set fitting 74-00-00 / 43
Ignition electric set removal 74-00-00 / 35
Ignition housing 72-00-00 / 14
Ignition housing inspection 72-00-00 / 11
Ignition housing removal 72-00-00 / 11
Ignition timing 74-00-00 / 19
Instruments 79-00-00 / 10
Intake air temperature sensor inspection 76-00-00 / 42
Intake manifold fitting 73-00-00 / 60
Intermediate gear 72-00-00 / 20

L

List of valid pages 00-00-00 / 11
Lithiumbase grease 00-00-00 / 34
Loctite 00-00-00 / 36
Lubrication system purging 79-00-00 / 26

M

Magnetic plug 79-00-00 / 10
Main oil pump 79-00-00 / 3, 79-00-00 / 5
Measuring tools 00-00-00 / 39
Molycote 00-00-00 / 36
Multimeter 00-00-00 / 41
Multipurpose grease 00-00-00 / 35

O

Oil circuit 79-00-00 / 5
Oil cooler 79-00-00 / 25
Oil lines 79-00-00 / 25
Oil pressure sensor 79-00-00 / 27
Oil pump disassembly 79-00-00 / 14
Oil pump 79-00-00 / 11
Oil pump checking 79-00-00 / 15
Oil pump reassembly 79-00-00 / 18, 79-00-00 / 19
Oil pump removal 79-00-00 / 11
Oil sump 79-00-00 / 21
Oil tank 79-00-00 / 22
Oil temperature display 79-00-00 / 10
Oil temperature sensor 79-00-00 / 26
Operating fluids 71-00-00 / 11
Operating limits 71-00-00 / 11
Orange caution lamp 76-00-00 / 11
Oscilloscope 00-00-00 / 41
Output connections on the TCU for lamps 76-00-00 / 11
Overspeeding 76-00-00 / 8

P

PC interface 76-00-00 / 12
Piston rings inspection 72-00-00 / 79
Pistons fitting 72-00-00 / 86
Pistons inspection 72-00-00 / 77
Pistons removal 72-00-00 / 75
Pitting 72-00-00 / 45, 72-00-00 / 47
Position finding 78-00-00 / 20
Preservation 71-00-00 / 18, 71-00-00 / 19
Preservation oil 00-00-00 / 37
Pressure connecting lines 73-00-00 / 10, 73-00-00 / 49
Pressure measurement system 71-00-00 / 22, 79-00-00 / 26
Pressure sensors inspection 76-00-00 / 44
Propeller gearbox 72-00-00 / 5, 72-00-00 / 22, 80-00-00 / 3
Propeller gearbox diassembly 72-00-00 / 28
Propeller gearbox reassembly 72-00-00 / 49
Propeller gearbox installation 72-00-00 / 53
Propeller shaft removal 72-00-00 / 30
Pushrods 72-00-00 / 85

R

Red boost lamp 76-00-00 / 11
Return to service 71-00-00 / 18
Rev counter inspection 74-00-00 / 55
Rev counter drive 72-00-00 / 21
Rev counter, mechanical 72-00-00 / 8
Roller bearings for F2 removal 72-00-00 / 24
Roller bearings for F3 removal 72-00-00 / 26
Roller bearings for F4 removal 72-00-00 / 27
Rotary seal 75-00-00 / 10

S

Servo motor 78-00-00 / 20
Silastic 00-00-00 / 36
Special tools 00-00-00 / 40
Sprag clutch 72-00-00 / 15
Sprag clutch dismantling 72-00-00 / 17
Sprag clutch installation 72-00-00 / 18
Sprag clutch removal 72-00-00 / 16
Spring, wastegate 78-00-00 / 19
Starting carburetor 73-00-00 / 31
Stator removal and refitting 74-00-00 / 48
Stroboscope 00-00-00 / 41
Suction pump 79-00-00 / 8
Surface damage 71-00-00 / 15
Return to service 00-00-00 / 25, 71-00-00 / 17, 71-00-00 / 18
Rev counter inspection 74-00-00 / 53
Rev counter drive 72-00-00 / 21
Rev counter, mechanical 72-00-00 / 8

d04774

T

Table of amendments 00-00-00 / 19
Target pressure reduction 76-00-00 / 8
TCU inspection 76-00-00 / 32
Technical data 71-00-00 / 11, 71-00-00 / 15
Temperature measuring system 71-00-00 / 22, 75-00-00 / 15, 79-00-00 / 26
Three-way solenoid valve 76-00-00 / 53
Throttle potentiometer calibration 76-00-00 / 31
Throttle potentiometer inspection 76-00-00 / 37
Tightening torques 00-00-00 / 35
Trigger coil kit 74-00-00 / 13
Trigger coil kit replacement 74-00-00 / 46
Trigger coils arrangement 74-00-00 / 8
Turbocharger assembly 78-00-00 / 15
Turbocharger disassembly 78-00-00 / 7
Turbocharger inspection 78-00-00 / 11
Turbo control unit 76-00-00 / 32
Type description 71-00-00 / 4

V

Vacuum pump 72-00-00 / 7, 72-00-00 / 10
Vacuum pump drive removal 72-00-00 / 32
Valve guide 72-00-00 / 62
Valve lapping paste 00-00-00 / 36
Valve seats 72-00-00 / 63
Valves 72-00-00 / 64

W

Water pump removal 75-00-00 / 6
Water pump housing 75-00-00 / 7, 75-00-00 / 13
Water pump housing inspection 75-00-00 / 7
Water pump shaft 75-00-00 / 9
Weights 71-00-00 / 11, 71-00-00 / 12
Wiring diagrams 74-00-00 / 24
Wiring harness inspection 76-00-00 / 35

d04774

NOTES

d02620

4) List of the valid pages

02708

Chapter	Page	Date
	Cover page	
00-00-00	1	05 01 2007
	2	05 01 2007
	3	05 01 2007
	4	05 01 2007
	5	05 01 2007
	6	05 01 2007
	7	10 01 2010
	8	10 01 2010
	9	10 01 2010
	10	05 01 2007
	11	02 01 2015
	12	02 01 2015
	13	02 01 2015
	14	02 01 2015
	15	02 01 2015
	16	02 01 2015
	17	05 01 2007
	18	05 01 2007
	19	10 01 2010
	20	02 01 2015
	21	02 01 2015
	22	10 01 2010
	23	10 01 2010
	24	10 01 2010
	25	10 01 2010
	26	10 01 2010
	27	10 01 2010
	28	10 01 2010
	29	10 01 2010
	30	10 01 2010
	31	10 01 2010
	32	10 01 2010
	33	10 01 2010
	34	10 01 2010
	35	10 01 2010
	36	02 01 2015
	37	02 01 2015
	38	02 01 2015
	39	10 01 2010
	40	10 01 2010
	41	10 01 2010
	42	10 01 2010
	43	02 01 2015
	44	10 01 2010
	45	10 01 2010
	46	10 01 2010
	47	10 01 2010
	48	10 01 2010
71-00-00	1	05 01 2007
	2	05 01 2007
	3	05 01 2007
	4	05 01 2007
	5	05 01 2007
	6	05 01 2007
	7	05 01 2007
	8	05 01 2007
	9	05 01 2007
	10	05 01 2007
	11	05 01 2007
	12	10 01 2010
	13	02 01 2015
	14	10 01 2010
	15	05 01 2007
	16	05 01 2007
	17	02 01 2015
	18	10 01 2010
	19	05 01 2007
	20	10 01 2010
	21	05 01 2007
	22	05 01 2007
72-00-00	1	10 01 2010
	2	07 01 2008
	3	07 01 2008
	4	05 01 2007
	5	05 01 2007
	6	05 01 2007
	7	05 01 2007
	8	02 01 2015
	9	10 01 2010
	10	10 01 2010
	11	05 01 2007
	12	10 01 2010
	13	05 01 2007
	14	10 01 2010
	15	05 01 2007

d05735

Chapter	Page	Date
	16	07 01 2008
	17	05 01 2007
	18	02 01 2015
	19	02 01 2015
	20	02 01 2015
	21	05 01 2007
	22	02 01 2015
	23	01 01 2008
	24	10 01 2010
	24A	10 01 2010
	24B	10 01 2010
	25	10 01 2010
	26	10 01 2010
	27	10 01 2010
	28	10 01 2010
	29	10 01 2010
	30	10 01 2010
	31	05 01 2007
	32	10 01 2010
	33	10 01 2010
	34	10 01 2010
	35	10 01 2010
	36	02 01 2015
	37	05 01 2007
	38	02 01 2015
	39	05 01 2007
	40	10 01 2010
	41	05 01 2007
	42	10 01 2010
	43	05 01 2007
	44	07 01 2008
	45	07 01 2008
	46	07 01 2008
	47	05 01 2007
	48	05 01 2007
	49	02 01 2015
	50	02 01 2015
	51	07 01 2008
	52	10 01 2010
	53	02 01 2015
	54	10 01 2010
	55	10 01 2010
	56	05 01 2007

Chapter	Page	Date
	57	07 01 2008
	58	10 01 2010
	59	10 01 2010
	60	05 01 2007
	61	07 01 2008
	62	05 01 2007
	63	10 01 2010
	64	05 01 2007
	65	05 01 2007
	66	01 01 2008
	67	02 01 2015
	68	02 01 2015
	69	02 01 2015
	70	05 01 2007
	71	05 01 2007
	72	05 01 2007
	73	05 01 2007
	74	05 01 2007
	75	05 01 2007
	76	05 01 2007
	77	05 01 2007
	78	05 01 2007
	79	07 01 2008
	80	10 01 2010
	81	02 01 2015
	82	02 01 2015
	83	10 01 2010
	84	10 01 2010
	85	05 01 2007
	86	10 01 2010
	87	05 01 2007
	88	10 01 2010
	89	05 01 2007
	90	07 01 2008
	91	05 01 2007
	92	02 01 2015
	93	02 01 2015
	94	05 01 2007
	95	07 01 2008
	96	05 01 2007
	97	02 01 2015
	98	10 01 2010
	99	05 01 2007

d05735

Chapter	Page	Date
	100	05 01 2007
	|| 101	02 01 2015
	102	07 01 2008
	|| 103	02 01 2015
	104	05 01 2007
	105	05 01 2007
	106	10 01 2010
	|| 107	02 01 2015
	108	10 01 2010
	109	05 01 2007
	110	05 01 2007
	|| 111	02 01 2015
	112	05 01 2007
	113	05 01 2007
	|| 114	02 01 2015
	|| 115	02 01 2015
	116	05 01 2007
	|| 117	02 01 2015
	118	05 01 2007
73-00-00	1	10 01 2010
	2	07 01 2008
	3	05 01 2007
	4	05 01 2007
	5	05 01 2007
	6	10 01 2010
	7	10 01 2010
	8	05 01 2007
	9	05 01 2007
	10	05 01 2007
	11	05 01 2007
	12	05 01 2007
	13	05 01 2007
	14	05 01 2007
	15	10 01 2010
	16	10 01 2010
	|| 17	02 01 2015
	18	10 01 2010
	19	10 01 2010
	20	07 01 2008
	21	07 01 2008
	|| 22	02 01 2015
	|| 23	02 01 2015
	24	10 01 2010

Chapter	Page	Date
	25	07 01 2008
	26	07 01 2008
	|| 27	02 01 2015
	28	07 01 2008
	29	10 01 2010
	|| 30	02 01 2015
	|| 31	02 01 2015
	32	07 01 2008
	33	07 01 2008
	34	07 01 2008
	35	07 01 2008
	36	07 01 2008
	37	07 01 2008
	|| 38	02 01 2015
	39	07 01 2008
	40	07 01 2008
	41	07 01 2008
	42	07 01 2008
	|| 43	02 01 2015
	| 44	02 01 2015
	| 45	02 01 2015
	| 46	10 01 2010
	| 47	07 01 2008
	| 48	07 01 2008
	| 49	07 01 2008
	| 50	07 01 2008
	| 51	02 01 2015
	| 52	02 01 2015
	| 53	07 01 2008
	| 54	10 01 2010
	| 55	07 01 2008
	| 56	07 01 2008
	| 57	07 01 2008
	| 58	07 01 2008
	| 59	07 01 2008
	| 60	07 01 2008
	| 61	02 01 2015
	| 62	02 01 2015
	|| 63	02 01 2015
	64	07 01 2008
	65	07 01 2008
	|| 66	02 01 2015

d05735

Chapter	Page	Date
74-00-00	1	10 01 2010
	2	07 01 2008
	|| 3	02 01 2015
	4	05 01 2007
	5	05 01 2007
	|| 6	02 01 2015
	7	05 01 2007
	8	05 01 2007
	9	05 01 2007
	10	05 01 2007
	11	05 01 2007
	|| 12	02 01 2015
	13	05 01 2007
	14	05 01 2007
	15	05 01 2007
	16	07 01 2008
	17	10 01 2010
	18	07 01 2008
	19	05 01 2007
	20	05 01 2007
	21	05 01 2007
	|| 22	02 01 2015
	23	05 01 2007
	24	05 01 2007
	25	10 01 2010
	26	05 01 2007
	27	10 01 2010
	28	05 01 2007
	|| 29	02 01 2015
	30	05 01 2007
	31	10 01 2010
	32	05 01 2007
	|| 33	02 01 2015
	34	05 01 2007
	35	05 01 2007
	36	05 01 2007
	37	05 01 2007
	38	05 01 2007
	39	05 01 2007
	|| 40	02 01 2015
	|| 41	02 01 2015
	|| 42	02 01 2015
	43	05 01 2007
	|| 44	02 01 2015
	45	05 01 2007
	|| 46	02 01 2015
	|| 47	02 01 2015
	48	05 01 2007
	|| 49	02 01 2015
	50	07 01 2008
	|| 51	02 01 2015
	52	05 01 2007
	53	05 01 2007
	|| 54	02 01 2015
	|| 55	02 01 2015
	56	05 01 2007
	57	07 01 2008
	58	07 01 2008
	59	07 01 2008
	60	07 01 2008
	|| 61	02 01 2015
	|| 62	02 01 2015
	|| 63	02 01 2015
	64	05 01 2007
75-00-00	1	07 01 2008
	2	05 01 2007
	3	05 01 2007
	|| 4	02 01 2015
	5	05 01 2007
	6	05 01 2007
	7	05 01 2007
	8	05 01 2007
	9	05 01 2007
	10	05 01 2007
	11	07 01 2008
	12	05 01 2007
	13	05 01 2007
	14	10 01 2010
	15	10 01 2010
	16	10 01 2010
	|| 17	02 01 2015
	|| 18	02 01 2015
	19	05 01 2007
	20	05 01 2007

d05735

Chapter	Page	Date
76-00-00	1	05 01 2007
	2	07 01 2008
	3	05 01 2007
	4	05 01 2007
	5	05 01 2007
	6	05 01 2007
	7	05 01 2007
	8	05 01 2007
	9	05 01 2007
	10	05 01 2007
	11	05 01 2007
	12	05 01 2007
	13	05 01 2007
	14	05 01 2007
	15	05 01 2007
	16	05 01 2007
	17	05 01 2007
	18	05 01 2007
	19	05 01 2007
	20	05 01 2007
	21	05 01 2007
	22	05 01 2007
	23	05 01 2007
	24	05 01 2007
	25	05 01 2007
	26	05 01 2007
	27	05 01 2007
	28	05 01 2007
	29	05 01 2007
	30	05 01 2007
	31	05 01 2007
	32	05 01 2007
	33	05 01 2007
	34	05 01 2007
	35	07 01 2008
	36	07 01 2008
	37	05 01 2007
	38	05 01 2007
	39	01 01 2008
	40	05 01 2007
	41	05 01 2007
			42	02 01 2015
	43	05 01 2007
	44	05 01 2007
	45	05 01 2007
	46	05 01 2007
	47	05 01 2007
	48	05 01 2007
	49	05 01 2007
	50	05 01 2007
	51	05 01 2007
	52	05 01 2007
	53	07 01 2008
	54	07 01 2008
	55	07 01 2008
	56	07 01 2008
	57	07 01 2008
	58	07 01 2008
			59	02 01 2015
	60	07 01 2008
78-00-00	1	10 01 2010
	2	05 01 2007
			3	02 01 2015
	4	10 01 2010
	5	10 01 2010
	6	05 01 2007
	7	05 01 2007
	8	05 01 2007
	9	05 01 2007
			10	02 01 2015
			11	02 01 2015
	12	07 01 2008
	13	07 01 2008
	14	07 01 2008
	15	07 01 2008
	16	07 01 2008
	17	07 01 2008
	18	07 01 2008
	19	10 01 2010
			20	02 01 2015
	21	07 01 2008
	22	07 01 2008
			23	02 01 2015
	24	07 01 2008
79-00-00	|| 1	02 01 2015
	2	05 01 2007

d05735

Chapter	Page	Date
	3	05 01 2007
	4	05 01 2007
	5	05 01 2007
	6	10 01 2010
	7	05 01 2007
	8	10 01 2010
	9	02 01 2015
	10	10 01 2010
	11	02 01 2015
	12	02 01 2015
	13	02 01 2015
	14	02 01 2015
	15	05 01 2007
	16	05 01 2007
	17	05 01 2007
	18	02 01 2015
	19	02 01 2015
	20	02 01 2015
	21	10 01 2010
	22	05 01 2007
	23	05 01 2007
	24	05 01 2007
	25	05 01 2007
	26	02 01 2015
	27	02 01 2015
	28	02 01 2015
	29	02 01 2015
	30	02 01 2015
	31	02 01 2015
	32	02 01 2015
80-00-00	1	07 01 2008
	2	05 01 2007
	3	05 01 2007
	4	05 01 2007
	5	02 01 2015
	6	02 01 2015
	7	05 01 2007
	8	05 01 2007
	9	05 01 2007
	10	05 01 2007
	11	10 01 2010
	12	02 01 2015
	13	02 01 2015
	14	02 01 2015
	Rear page	

d05735

NOTES

d02620

NOTES

d02620

5) Table of amendments

***Approval**

The technical content of this document is approved under the authority of

DOA Nr. EASA.21J.048.

08215

Ser. No.	Section	Pages	Date of correction	Sign of acceptance	Date of accept. of resp. authority	Date of implemen-tation	Sign/ Signature
0	00-00-00	all	05 01 2007	DOA*			
0	71-00-00	all	05 01 2007	DOA*			
0	72-00-00	all	05 01 2007	DOA*			
0	73-00-00	all	05 01 2007	DOA*			
0	74-00-00	all	05 01 2007	DOA*			
0	75-00-00	all	05 01 2007	DOA*			
0	76-00-00	all	05 01 2007	DOA*			
0	78-00-00	all	05 01 2007	DOA*			
0	79-00-00	all	05 01 2007	DOA*			
0	80-00-00	all	05 01 2007	DOA*			
1	00-00-00	11-13, 15,19, 34-36	01 01 2008	DOA*			
1	72-00-00	22, 23, 28,	01 01 2008	DOA*			
		51-54, 66	01 01 2008	DOA*			
1	73-00-00	1, 2, 17, 18, 25, 26,	01 01 2008	DOA*			
		53, 54, 55, 58	01 01 2008	DOA*			
1	76-00-00	39	01 01 2008	DOA*			
2	00-00-00	7-9,11-16, 19,33	07 01 2008	DOA*			
2	72-00-00	2, 3,8,16, 24-27,35	07 01 2008	DOA*			
		38, 40,44-46,	07 01 2008	DOA*			
		49-53, 57, 58, 61,	07 01 2008	DOA*			
		79, 83,90,95,102	07 01 2008	DOA*			
		111,114,115	07 01 2008	DOA*			
2	73-00-00	1,2,16-60	07 01 2008	DOA*			
2	74-00-00	2, 16,46, 47, 49,	07 01 2008	DOA*			
		50, 57-60,62	07 01 2008	DOA*			
2	75-00-00	1,11,14,15,17,18	07 01 2008	DOA*			
2	76-00-00	2,35,36,53-60	07 01 2008	DOA*			
2	78-00-00	1,11-24	07 01 2008	DOA*			
2	79-00-00	18,19,27	07 01 2008	DOA*			
2	80-00-00	1,13,14	07 01 2008	DOA*			
3	00-00-00	7-9, 11-16,19-48	10 01 2010	DOA*			
3	71-00-00	12-14,18, 20	10 01 2010	DOA*			

d04774

02709_2

Ser. No.	Section	Pages	Date of correction	Sign of acceptance	Date of accept. of resp. authority	Date of implemen-tation	Sign/Sig nature
3	72-00-00	1,8-10,14,18-19,22, 34-30,33-34,42,52-55, 59,63,69,81,83-84,96 92-93,98,106,108,111	10 01 2010	DOA*			
3	73-00-00	1,6-7,15-19,23,27,29-30,45-46,51,54	10 01 2010	DOA*			
3	74-00-00	6,25,27,29,31,33,62	10 01 2010	DOA*			
3	75-00-00	1,14-18	10 01 2010	DOA*			
3	76-00-00	59	10 01 2010	DOA*			
3	78-00-00	1,3-5,19,23	10 01 2010	DOA*			
3	79-00-00	6,8,10,19-21,27	10 01 2010	DOA*			
3	80-00-00	11,14	10 01 2010	DOA*			
4	00-00-00	11-16,20-21,36-38,43	02 01 2015	DOA*			
4	71-00-00	13,17	02 01 2015	DOA*			
4	72-00-00	8,18,19,20,22,36,38, 49,50,53,67,68,69,81, 82,92,93,97,101,103, 107, 111,114,115,117	02 01 2015	DOA*			
4	73-00-00	17,22,23,27,30,31,38, 43-63,66	02 01 2015	DOA*			
4	74-00-00	3,6,12,22,29,33,40-42,44,46,47,49,51,54, 55,61-63	02 01 2015	DOA*			
4	75-00-00	4,17,18	02 01 2015	DOA*			
4	76-00-00	42,59	02 01 2015	DOA*			
4	78-00-00	3,10,11,20,23	02 01 2015	DOA*			
4	79-00-00	1,9,11-14,18-20,26-32	02 01 2015	DOA*			
4	80-00-00	5,6,12-14	02 01 2015	DOA*			

d05735

5.1) Summary of amendments

Summary of the relevant amendments in this context, but without requirement on completness.

Ser. No.	Section	Pages	Date of correction	Comment
4	00-00-00	11-16,20,21,36-38, 43	02 01 2015	effective pages selected, consumable materials changed/deleted/added.
4	71-00-00	13,17	02 01 2015	information about the ignition timing changed.
4	72-00-00	8,18-20,22,36,38, 49,50,53,67-69,81, 82,92,93,97,101, 103,107,111,114 115,117	02 01 2015	correction of text, LOCTITE from 221 to 603 changed, Dowel pin from 8x20 to 6x20 changed, Reference to inspection tool changed, Fig 72-75 changed, NOTICE at cylinder head fitting, Change of tightening angle from 180° to 120°, piston/cylinder/intermediate gear of electric starter /sprag clutch: wear limits changed.
4	73-00-00	17,22,23,27,30,31, 38,43-63,66	02 01 2015	information to Fig 73-15/2, float brackets-spacing: change of text, Fig73-28 changed, fuel pump (912+914): change of text+graphics, NOTICE+ +NOTES added.
4	74-00-00	3,6,12,22,29,33,40-42,44,46,47,51,54, 55, 61-63	02 01 2015	Fig 74-1+20+22+25+28+29+33 changed, wording from “resistance spark plug..” to “spark plug..“ changed, wear limits+form sheet changed.
4	75-00-00	4,17,18	02 01 2015	cylinder head temperature sensor: additional text.
4	76-00-00	42,59	02 01 2015	form sheets changed.
4	78-00-00	3,10,11,20,23	02 01 2015	exhaust system (912): change of text, Fig 78-3+ 13 changed, wear limit (TC03) corrected.
4	79-00-00	1,9,11-14,18-20 26-32	02 01 2015	LOC.515 changed to LOC.5910, tightening torque at oil pump cover changed (from 133 to 90 in.lb -oiled thread), Fig 79-19 changed.
4	80-00-00	5,6,12- 14	02 01 2015	graphic+wear limits changed.

d05735

NOTES

d04774

6) General note

We are pleased you decided to purchase a ROTAX aircraft engine.

This section describes the maintenance of all engines in the 912/914 Series.

◆ NOTE: The 912/914 Series includes the following engines:

- 912 A
- 912 F
- 912 S
- 912 UL
- 912 ULS
- 912 ULSFR
- 914 F
- 914 UL

Before carrying out maintenance work on the engine, please read the Maintenance Manual (Heavy Maintenance) carefully. See also the latest revision of the corresponding Maintenance Manual (Line Maintenance) for the respective engine type 912 Series or 914 Series.

If any passages of this Manual are not clearly understood or if you have any questions, please contact an authorized distributor or Service Center for ROTAX aircraft engines.

d04774

NOTES

d02620

7) Safety notice

Although the mere reading of such information does not eliminate the hazard, your understanding and application of the information will promote correct use.

The information and components/system descriptions contained in this Maintenance Manual are correct at the time of publication. BRP-Rotax maintains a policy of continuous improvement of its products, without, however, incurring any obligation to install them on its products previously manufactured.

BRP-Rotax reserves the right to discontinue or alter any specification, design, detail, model or equipment, at any time and without incurring obligation.

The illustrations in this Maintenance Manual show the typical construction. They may not correspond to every detail or the exact shape of the actual parts, but show parts which have the same or similar function.

Specifications are given in the SI metric system with the USA equivalent in parenthesis.

7.1) Repeating symbols

This Manual uses the following symbols to emphasize particular information. These indications are important and must be respected.

▲ **WARNING:** **identifies an instruction which, if not followed, may cause serious injury including the possibility of death.**

■ **CAUTION:** **Denotes an instruction which, if not followed, may severely damage the engine or other component.**

◆ **NOTE:** **Indicates supplementary information which may be needed to fully complete or understand an instruction.**

|| A revision bar outside of the page margin indicates a change to text or graphic.

XXX In various illustrations, this symbol indicates the location of the serial number on a component.

4 In the illustrations concerned, this symbol indicates the position of the serial component number (e.g. on crankshafts, camshafts).

VT06 In the illustrations concerned, a fourdigit combination of letters and numbers indicates a control point which needs to be checked. See the corresponding dimension sheets for the correct value.

d04774

NOTES

d04774

8) Technical documentation

See also the corresponding Maintenance Manual (Line Maintenance) for the respective engine type 912 Series or 914 Series.

8.1) Filling in the dimension sheets

See Fig. 00-1

All measurements must be entered in the corresponding dimension sheets as shown.

Fig. 00-1 shows the correct procedure for filling in the dimension sheets attached after each section.

■ CAUTION: If the engine is overhauled / repaired before the end of the TBO, the 50% specified values (3) for wear limits do not apply and must be calculated separately in accordance with Section 9 “Classification of parts for maintenance”.

- Look up the desired control point code (1) in the illustration in the specified section.

Fig. 00-1

07538

Description	Code	Reading new		wear limit	wear limit		Readings			
		min	max	100%	50%					
Piston										
							Cyl. 1	Cyl. 2	Cyl. 3	Cyl. 4
Piston red 79,5 mm / 3,1 in.	PI01	79,4980 3,1294	79,5020 3,1300	79,3900 3,1256	79,4390 3,1275	actual				
						renewed				

1 4 5 6 7

- The maximum limits for wear are divided into two columns, maximum wear 100% (2) and 50% wear (3).
- Field (4) gives the maximum permissible values in [mm], field (5) in [inches].
- The respective actual value must be entered in the corresponding box (6) in [mm] or [inches].
- The actual value for any part which has been replaced is entered in the corresponding field (7) in [mm] or [inches].

d04774

Dimensional check of parts

See Fig. 00-2

Take readings of all parts listed in the dimension sheets.

Enter the respective actual value in the dimension sheets attached directly after each section.

■ CAUTION: Where measurement values are taken in hundredths of a millimeter or more precisely, the temperature of the part must be 20 to 25 °C (68 to 77 °F).

Fig. 00-2

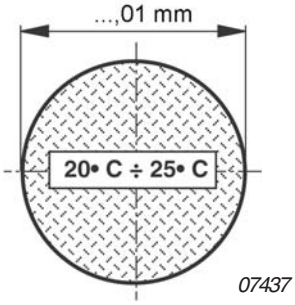

8.2) List of abbreviations

The following table shows the abbreviations used for the control points.

Abbreviations for control points

Abbreviation	Description
AL	**al**ternator
CA	**ca**mshaft
CC	**c**rank**c**ase
CH	**c**ylinder **h**ead
CR	**c**on**r**od
CS	**c**rank**s**haft
CY	**cy**linder
EL	**el**ectric
ES	**e**lectric **s**tarter
EX	**ex**haust
GB	**g**ear**b**ox
GO	**go**vernor
OP	**o**il **p**ump
PI	**pi**ston
PP	**p**iston **p**in
ST	**st**ator
TC	**t**urbo **c**harger
VT	**v**alve **t**rain
WP	**w**ater **p**ump

08216

d04774

9) Classification of parts for maintenance/repair

See Figs. 00-3 and 00-4.

As for an overhaul, parts for maintenance/repair must be classified. They are classified either as **"parts usable"** or as **"parts to be replaced"**.

The classification is made on the basis of the following criteria:

– **Hours of operation** (decisive are the total operating hours of the part / engine or hours since the last overhaul)

– Determined (measured) **actual dimension** of the respective parts.

– See Figs. 00-3 and 00-4 for the classification of such parts.

Proceed as follows:

– Determine wear as a percentage of the wear tolerance

(see the dimension sheets attached directly after each section for the wear limit (100%) of the part in question).

– Determine the hours of operation for the part in question (see Log book etc.)

d04774

For engines of Series 912:

Fig. *00-3*

08677

TSN [h] (Time Since New) from	to	max. permissible wear for repair [%] TBO 1500 - 912 Series	max. permissible wear for repair [%] TBO 2000 - 912 Series
0	50	4	4
51	100	12	12
101	150	18	18
151	200	24	24
201	250	30	30
251	300	36	36
301	350	42	42
351	400	46	46
401	450	52	52
451	500	56	56
501	550	60	60
551	600	62	62
601	700	68	67
701	800	73	72
801	900	78	76
901	1000	82	80
1001	1100	87	83
1101	1200	90	87
1201	1300	93	90
1301	1400	96	92
1401	1500	100	94
1501	1600		96
1601	1700		98
1701	1800		98
1801	1900		99
1901	2000		100

d04774

For engines of Series 914:

Fig. *00-4*

08679

TSN [h] (Time Since New) from	to	max. permissible wear for repair [%] TBO 1200 - 914 Series	max. permissible wear for repair [%] TBO 2000 - 914 Series
0	50	6	4
51	100	14	12
101	150	24	18
151	200	30	24
201	250	36	30
251	300	44	36
301	350	50	42
351	400	54	46
401	450	60	52
451	500	64	56
501	550	68	60
551	600	72	62
601	700	76	67
701	800	82	72
801	900	87	76
901	1000	91	80
1001	1100	95	83
1101	1200	100	87
1201	1300		90
1301	1400		92
1401	1500		94
1501	1600		96
1601	1700		98
1701	1800		98
1801	1900		99
1901	2000		100

d04774

9.1) Determination of actual wear [%]

See Figs. 00-5, 00-6 and 00-7.

Determine actual dimension **F** of the part in question.

For new dimension (max) **B** and wear limit **C,** see the corresponding section ´Wear limits“ (e. g. 74-00-00 sec. 4).

Fig. 00-5
08217

$$\text{Actual wear} = \frac{\{\text{Actual dimension (F)} - \text{New dimension max. (B)}\} \times 100}{\{\text{Wear limit (C)} - \text{New dimension max. (B)}\}} \quad [\%]$$

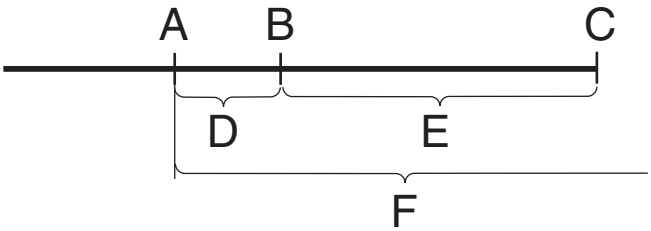

Fig. 00-6
07531

The **actual wear** in [%] is determined with the following formula:

Legend:

A New dimension (min)

B New dimension (max)

C Wear limit

D New dimension tolerance

E Wear tolerance

F Actual dimension

d04774

■ CAUTION: New dimension (max) **B** is always the dimension which is closest to wear limit **C**.

Fig. 00-7

Actual wear [%] is **greater** than or **equal** to the **max. permissible wear** [%] calculated from the table	Parts must be replaced
Actual wear [%] is **smaller** than the **max. permissible wear** [%] calculated from the table	Parts can be used again

08219

Procedure for classification of "On Condition Parts" at maintenance/ repair:

◆ NOTE: A negative result means that the actual dimension **F** is within the new dimension tolerance **D**.

Example for engines of Series 914:

Hours of operation indicated 300 h.

The determined percentage of maximum permissible wear calculated is **46.6 %**.

New dimension (max)	**B** = 28.03 mm (1.1035 in.)
Wear limit	**C** = 28.10 mm (1.1062 in.)
Actual dimension	**F** = 28.07 mm (1.1051 in.)
Actual wear	**57.1 %**

▲ WARNING: The part must be replaced (i.e. this part is excessively worn for only 300 hours of operation).

d04774

NOTES

10) Maintenance

The following sections describe maintenance procedure for engines of the 912/914 Series above and beyond the maintenance and special checks, see corresponding Maintenance Manual (Line Maintenance) for the respective engine type, 912 Series or 914 Series, and the systems descriptions given hitherto. The description is subdivided into subsections and descriptions of the function of the various systems.

Some overlapping maintenance instructions are treated as generally valid information at the beginning of this chapter.

10.1) Trouble shooting

In the Operators Manual, possible problems as well as feasible remedies are listed. At the same time, brief reference is made to the necessary remedial action.

See the respective sections in the Operators Manual for the corresponding engine type in the 912/914 Series.

10.2) Tightening torques

In general, all screw connections on ROTAX engines must be tightened using a torque wrench.

If not specified otherwise for a component, tighten screw connections to the following torque:

M4	:	4	Nm (35 in.lb)
M5	:	6	Nm (55 in.lb)
M6	:	10	Nm (90 in.lb)
M8	:	24	Nm (17.7 ft.lb)
M10	:	35	Nm (25.8 ft.lb)

■ CAUTION: If not specified otherwise, the threads are not lubricated when fastened.

◆ NOTE: Adhere to the tightening torques specified see also indications in the Illustrated Parts Catalog.

d04774

10.3) Consumable materials

▲ WARNING: Use only the specified or **technically equivalent** materials for all maintenance work.

The materials listed have undergone longterm testing and are suitable for all operating conditions indicated by the manufacturer.

▲ WARNING: When handling chemicals, comply with all the customary regulations and specifications of the producer, including the expiry date.

◆ NOTE: Consider the curing time of the sealing surface compound as stated by the manufacturers' instructions.

No.	part no.	description, application	Qty.
1	897651	**LOCTITE 243 blue,** medium duty screw locking agent	10 ml
2	899789	**LOCTITE 603 green,** oil tolerant retaining compound, heavy-duty	10 ml
3	297434	**LOCTITE Anti-Seize 8151,** for the prevention of fretting corrosion	50 g
4	297433	**MOLYKOTE G-N,** lubricant	100 g
5	897330	**Lithium-base grease,** to avoid leakage current	250 g
6	897870	**Filter oil,** for optimum filter efficiency and moisture protection	14.8 ml
7	297368	**SILASTIC 732** multipurpose onecomponent siliconbased sealing compound	310 ml
8	899788	**LOCTITE 648 green,** high temperature screw locking agent	5 ml
9	898351	**KLUEBER Isoflex Topas 5910** Long-term grease	0.5 kg
10	899791	**LOCTITE 5910** flange sealant provides flexibility and adhesion	50 ml
11	n.a.	**LOCTITE 7063** for degreasing and cleaning surfaces	as required
12	897186	**SILICONE HEAT CONDUCTION COMPOUND** Application of the heat conduction compound will reduce heat transfer resistance. The greaselike, temperature-	150 g

d05735

resistant silicon compound fills cavities between components and cooling elements (e.g: spark plug - cylinder head), which otherwise do not contribute to heat conduction.

13 n.a. Multipurpose grease LZ

Generally usable, neutrally colored multipurpose grease, water resistant and highly adherent. Usable for temperatures from -35 °C to +120 °C (-31 °F to 248 °F) and can be subjected to high mechanical loads.

14 n.a. Preservation oil

This special oil has excellent penetrating capabilities and reaches even tiny gaps, it's highly effective additives protect against corrosion of metal surfaces.

15 n.a. Flexible web for surface finishing 3M Scotch-Brite Multi . Flex - very fine or ultra fine

Is sold by the meter and used for manual removal of smaller rust spots or oxidation, especially for optimum ground connections. It is particularly suitable for removing LOCTITE from surfaces or threads to make them metallic clean. Before re-applying LOCTITE, clean surfaces with nitrothinner or degreasing agent (CASTROL ZA 30 or OMV - SOFT SOL). When using solvents, observe the safety regulations for persons and the environment.

16 n.a. MS4 / DC4 Dow Corning # 4

Electrical insulating compound for protection of electrical connections.

17 898570 Locking paint

seals screws ..... 20 ml

18 n.a. Cleaning agent

▲ WARNING: Use only approved cleaning agents (e.g. varsol, etc.) for cleaning metal parts.

Do not use lyebased cold cleaners or degreasing agents. Do not clean coolant and oil hoses with aggressive solutions. Clean off residues of sealing compound with sealant remover.

d05735

Soak combustion chamber, piston and cylinder head with cleaning agent and remove combustion residues with a bronze brush. CASTROL “Clenvex 2000” has proved very effective. It is a solvent - cold cleaner, free of halogen, on the basis of selected fuel fractions and is biodegradable.

Never use caustic or corrosive cleaning agents.

|| **19 n.a.** **Valve lapping paste**

This paste, produced by various manufacturers, is a fine granulate lapping paste for manual lapping of valve seats and valves. The paste is usually available in 3 different granulate sizes. Use as per manufacturer’s instructions.

|| **20 n.a.** **MICRONORM abrasive**

This abrasive is suitable for local and gradual very fine treatment of steel parts with rust film (propeller shaft). The MICRONORM abrasive contains no harmful substances, is approved by the competent authorities and guarantees optimum cleaning. The granulates used are of sizes 40 to 60 μ . The achievable surface roughness is between 0.5 and 1 μ, which corresponds to ultrafine machining of surfaces.

d05735

10.4) Auxiliary tools

- compression tester or 2 pressure gauges with calibrated orifice, adapter for dial gauge in spark plug thread
- valve spring mounting pliers
- step punch for valve guide
- adjustable reamer 6.5 to 7.5 mm (0.256 to 0.295 in.)
- valve seat machining device, valve lapping paste,
- gearbox support plate
- stud extraction tool
- scraper, very fine emery cloth, grinding tool, cover sheet, adhesive tape
- cleaning agent, approved cleaners, funnel, graphite marker.
- magnetic particle tester DEUTROFLUX, series UHW, or equivalent. See 72-00-00 sec. 5.1.1.

  These testers are suitable for complete combined magnetic particle crack inspection of all ferromagnetic materials. For this purpose **an A.C. field circulation** can be combined with a **shifted phase A.C. circulation** . The two magnetizing methods are independent from each other and can be applied separately.

  To achieve the direction changes of the magnetic field vector necessary for indication of cracks in any direction, the alternating currents serving as the current supply for the different methods of magnetizing are dephased by 120° to each other:

  a) current circulation for indication of longitudinal cracks

  b) field circulation for indication of transverse cracks

  c) auxiliary circulation for indication of axial and radial cracks on parts with bores right through by using an electric auxiliary conductor (copper bar).

  Measure tangential field intensity with field intensity tester Deutrometer 3870 or with an equivalent field intensity tester. The target value is 10 - 50 A/cm. If cracks are detected then the affected part must be replaced. Clean and demagnetize the part. The maximum remaining magnetism must not exceed 1.2 A/cm.

  The inner bore of the propeller shaft is excluded from magnetic particle crack inspection.

■ CAUTION: Observe the manufacturers instructions.

d04774

- Disassembly device for propeller gearbox.

  Fig. 00-8 shows one possible tensioning device for the disassembly of the propeller gearbox. The dimensions given are only intended for easier orientation and are not binding.

Fig. 00-8

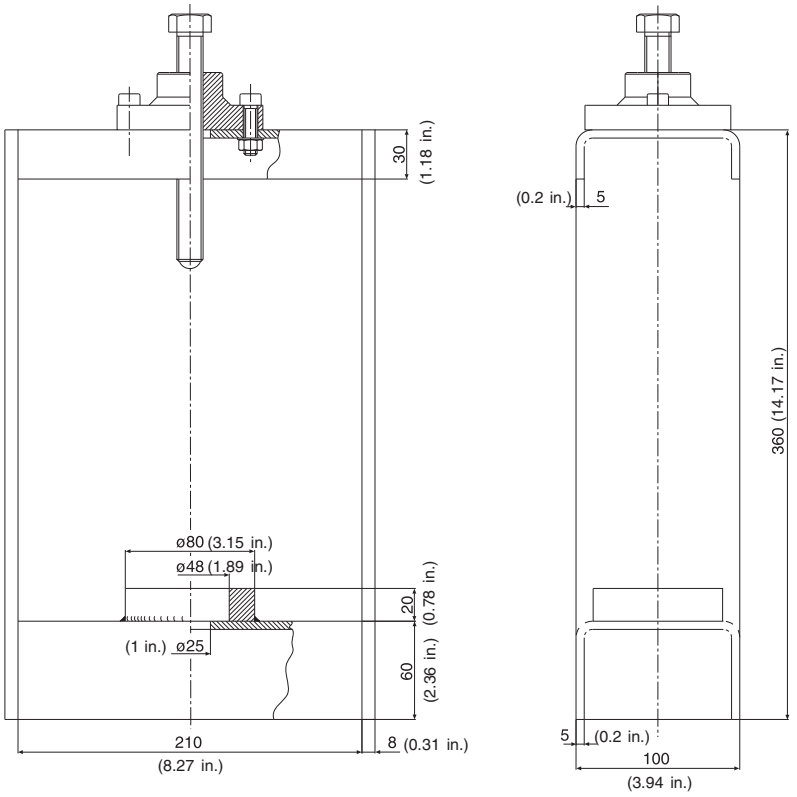

07525

d04774

10.5) Measuring tools

Calliper rule, dial gauge indicator, micrometer, inner micrometer, inner fine measuring device, feeler gauge, spring scale up to 50 kp (500 N)(112.5 lbf).

Stroboscope:	BOSCH 0 684 100 308 or equivalent. Supply voltage 8 to 15 V. Flash triggering via inductive clampon pickup. Flashing frequency 4500 rpm.
Multimeter:	FLUKE series 70, series 80 or equivalent.
	Electronic, 3 1/2 digit indication.
	Current range 10 A.
	Direct voltage range 200 V minimum.
	Resistance range 200 Ω to 2 MΩ
	Acoustic continuity tester.
Oscilloscope:	TEKTRONIX 2225 or equivalent
	2 channels
	Analog
	Sensitivity 5 mV to 5V/div
	Frequency limit 50 MHz

■ CAUTION: When using these instruments, observe the manufacturer's instructions.

d04774

10.6) Special tools and devices

See Figs. 00-9, 00-10 and 00-11.

The following tools and devices are also listed in the Illustrated Parts Catalog.

Fig. No.	Part No.	Description, application	Number
1	276282	spark plug wrench a/f 16	1
	276280	spark plug wrench a/f 18	1
2	977420	hand lever 8x130-10 for spark plug wrench	1
3	240880	thread bolt M8x50 for crankshaft locking	1
4	877890	Torx bit - T40 for magnetic plug	1
5	877110	guide sleeve for O-ring idle mixture screw and idle jet	1
6	876510	insertion jig for oil seal (12x30x7), water pump shaft	1
7	877258	insertion jig for rotary seal	1
8	877270	insertion jig assy. for oil seal 32x52x7 crankshaft magneto side	1
9	877802	circlip installation tool assy., for assembly of piston pin circlips	1
10	877650	insertion jig	1
11 - 12	877091	piston pin extractor assy. for assembly and disassembly of the piston pin	1
12	877155	extracting nut M6 assy., for piston pin extractor	1
13	276332	insertion jig assy. for pressing out needle sleeve 22x28x12 and ball bearing 15x32x8, vacuum pump	1
14	877276	insertion jig assy. for oil seal 22x32x7, vacuum pump	1
15	877360	guide sleeve for oil seal 32x52x7, crankshaft, magneto side	1

d04774

Fig. No.	Part No.	Description, application	Number
16	877295	impeller wrench assy. ..... for water pump impeller	1
17	240381	hex. screw M6x12 ..... for float level gauge	1
17-18	877730	float level gauge assy., ... for check of float lever	1
19	877320	press-in ring ..... for ball bearing 35-72-17 propeller shaft, use together with pressin jig 876 518	1
20	877680	insertion jig with sleeve... ..... for oil seal 6x11x3/4,5 of rev counter housing	1
21	841875	hex. screw M16x120 ..... for puller	1
21- 22	877375	puller assy. ..... for fly wheel hub	1
23	877417	protection mushroom ..... for crankshaft, magneto side	1
24	877377	puller assy. ..... narrow configuration, for fly wheel hub	1
25- 27	877765	crankcase splitting tool	Z
28	877387	valve spring mounting device assy.	1
29	877380	valve spring mounting device assy.. ..... for removal of the valve springs	1
30	877790	adapter ring for removal of valve spring.	1
31	877570	tapping drill M18x1 ..... for cleaning of fine thread when replacing the coolant fitting	1
32	876967	piston ring retainer 84 mm (3.31 in.)	1
32	876978	piston ring retainer 79.5 mm (3.13 in.)	1
33	877440	socket wrench A/F 41x20 L	1
33- 34	877445	socket wrench assy. 41x12.5 ..... for hex. nut 41 a/f, crankshaft power take off side	1
34	877460	reducing socket wrench 3/4"-1/2"	1
35	877465	reduction socket 3/4"-1" ..... 1" to 3/4", for socket wrench 46 a/f	1
36	877450	insert S 46x20 L ..... for hex. nut 46 a/f, crankshaft magneto side	1

d05735

Fig. No.	Part No.	Description, application	Number
37	877315	graduated straightedge assy. for checking the plain bearing projection	1
38	876950	precision dial gauge	1
39	877710	dial gauge adapter assy.,	1
40	877300	aligning plate	1
41	877262	cylinder aligning tool for alignment of the cylinder	1
42	877620	oil filter wrench 80-110 for oil filter removal	1
43	877245	trestle adapter assy., for fixation of engine Type 914	1
44	877670	cutting tool	1
45	874230	fuel pressure gauge	1
46	877240	trestle adapter assy., for fixation of engine Type 912	1
47	877930	trestle support assy.	1
48	877840	hose clamp pliers for spring band hose clip 28	1
49	976140	dial gauge adapter assy. for checking valve seating	1
50	976210	measuring tool measuring fixture for checking valve springs	1
51	976995	check weight check weight for checking valve springs	Z
52	242660	distance nut M8x33 locking device for vacuum pump drive sleeve	1
53	876470	ring spanner a/f 10/13	1
54	876518	insertion jig for oil seal 40x55x7, gear cover	1
55	877660	puller assy., for gearbox	1
56- 57	877615	extractor assy., for propeller shaft, roller bearing 25x52x15 and oil seal 30x52x7	1
57	877580	pull-in spindle M24x1.5	1
58	276155	handle lever 12x250	1

d04774

Fig. No.	Part No.	Description, application	Number
59	842585	hex. nut M24x1.5 length 19	1
60	941180	stud M10x45/20 for roller bearing 25x52x15 and oil seal 30x52x7	1
61	877600	press-out mushroom for propeller shaft F3 and F4	1
62	877605	press-out mushroom for propeller shaft F2	1
63	877594	press-in insert for roller bearing 25x52x15 and oil seal 30x52x7, for F2	1
64	877590	press-in mushroom for roller bearing 25x52x15 and oil inlet flange, for F3	1
65	877560	pull-out plate for roller bearing 25x52x15, oil seal 30x52x7 and oil inlet cover	1
66	242091	hex. nut M10 for roller bearing 25x52x15, oil seal 30x52x7 and oil feed line cover	1
67	876885	mounting yoke to compress dog gear	1
68- 71	876489	puller assy., for ball bearing 15x32x8, needle sleeve 22x28x12, oil inlet flange and oil inlet cover	1
69	941730	hex. screw M6x80	1
70	827305	washer 6.2/18/2	1
71	242211	hex. nut M6	1
72	877597	press-in mushroom for ball bearing 15x32x8, vacuum pump and governor drive	1
73	877595	press-in mushroom for needle sleeve 22x28x12, vacuum pump and governor drive	1
n.d.	976380	mono hook circlip - puller for piston pin circlip	1
74	877690	check lever for removal of the rocker arms	1
75	877190	press-in device for pressing in the rev counter pinion	1
76	877500	pin release tool	1

d04774

Fig. 00-9

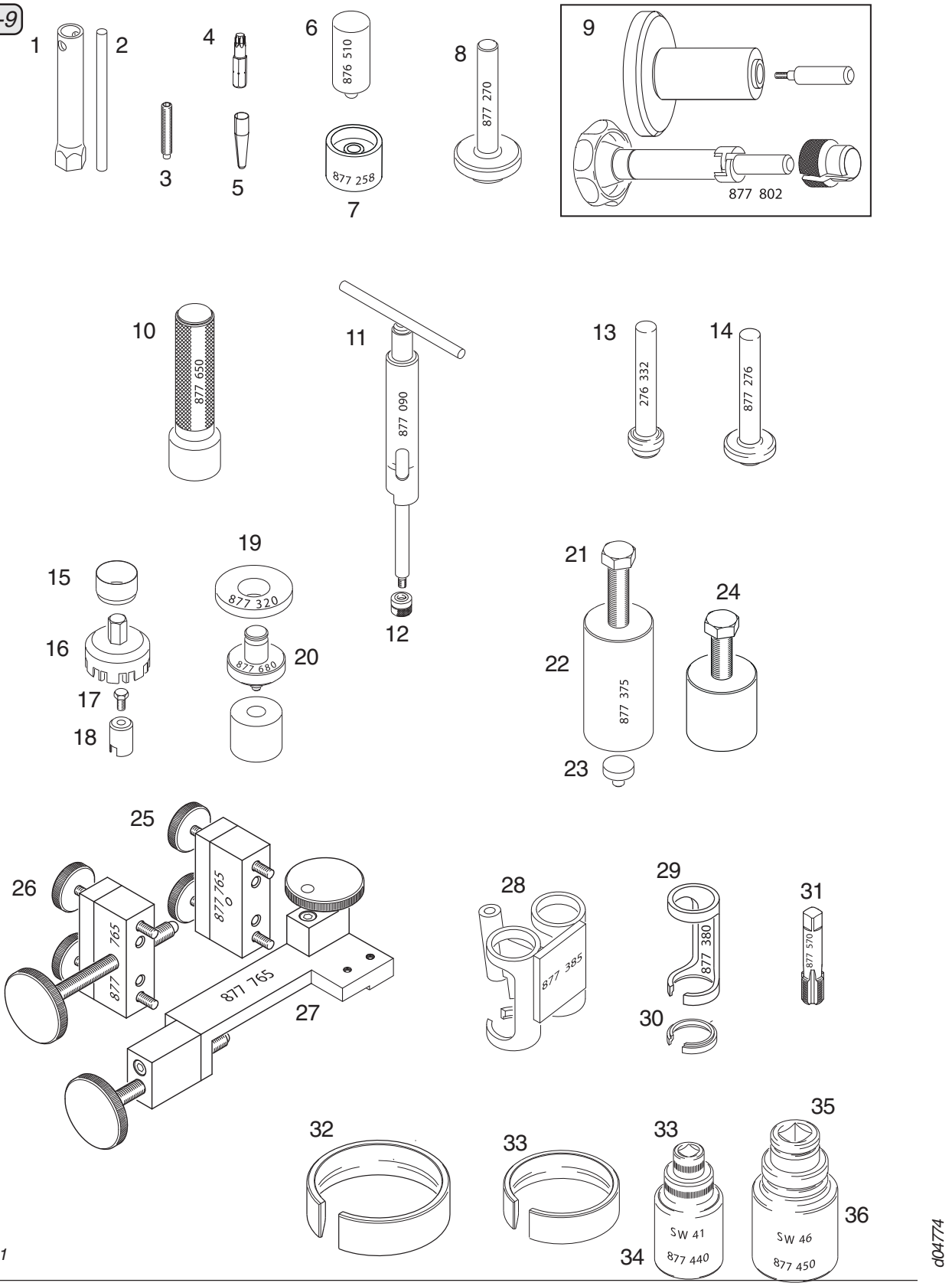
1
2
3
4
5
6
876 510
7
877 258
8
877 270
9
877 802
10
877 650
11
877 090
12
13
276 332
14
877 276
15
16
17
18
19
877 320
20
877 680
21
22
877 375
23
24
25
26
877 765
877 765
27
877 765
28
877 385
29
877 380
30
31
877 570
32
33
33
34
SW 41
877 440
35
36
SW 46
877 450
08201
d04774

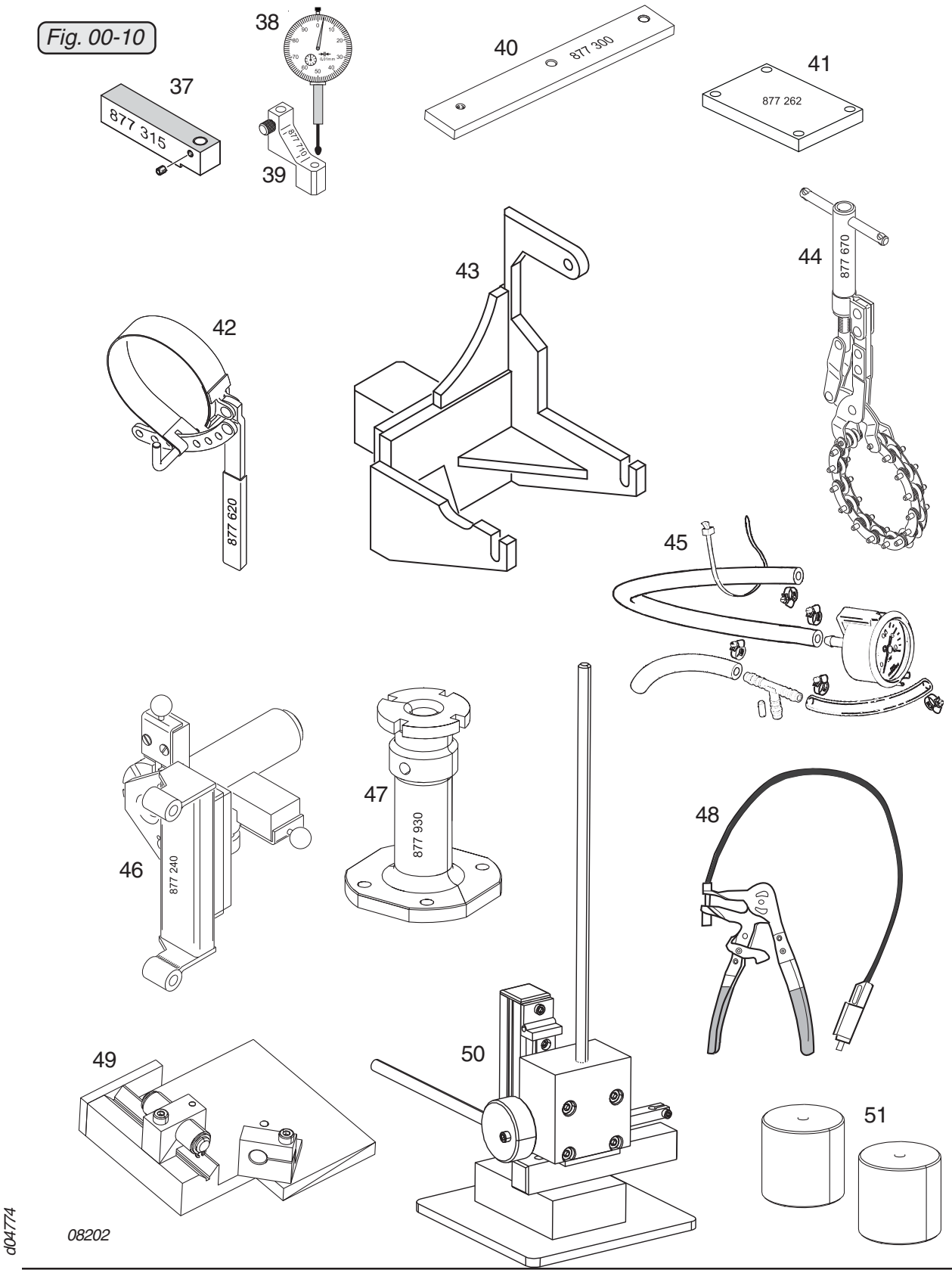
Fig. 00-10
37
877 315
38
39
877 191
40
877 300
41
877 262
42
877 620
43
44
877 670
45
46
877 240
47
877 930
48
49
50
51
08202
d04774

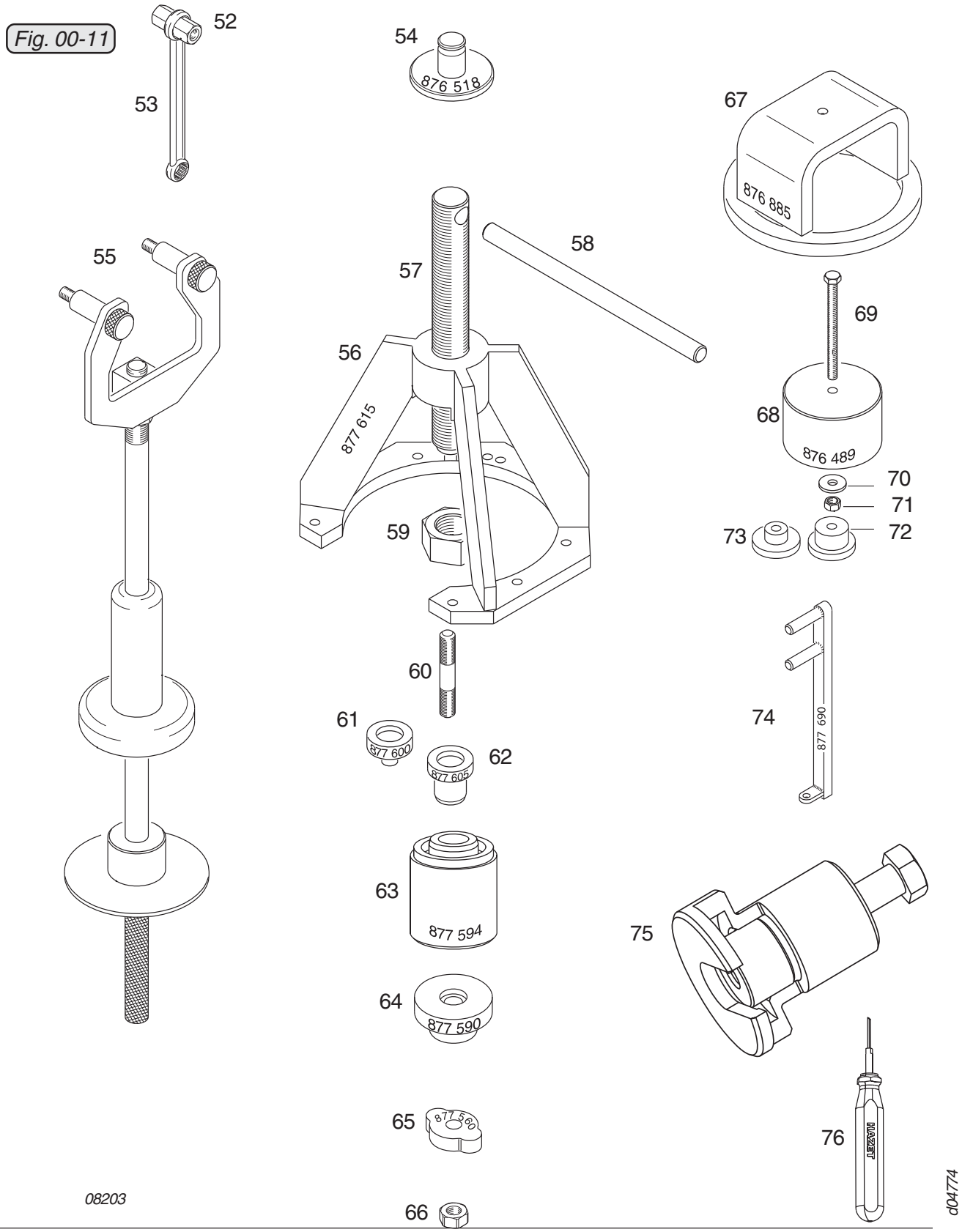
Fig. 00-11
52
53
54
876 518
55
57
58
56
877 615
59
60
61
877 600
62
877 605
63
877 594
64
877 590
65
877 580
66
67
876 885
69
68
876 489
70
71
72
73
74
877 690
75
76
HAZET
08203
d04774

SECTION 71

POWER PLANT

1) Table of contents

SECTION 71
POWER PLANT

1) Table of contents ..... 71-00-00 / 1
2) System description ..... 71-00-00 / 3
   2.1) Description of design ..... 71-00-00 / 3
   2.2) Type description ..... 71-00-00 / 4
   2.3) Engine components, engine views, cylinder designation and description of main axes ..... 71-00-00 / 5
3) Technical data ..... 71-00-00 / 11
   3.1) Operating limits ..... 71-00-00 / 11
   3.2) Operating fluids / Capacity ..... 71-00-00 / 11
   3.3) Weights ..... 71-00-00 / 11
   3.4) Engine / Components ..... 71-00-00 / 12
4) Treatment of corrosion and surface damage ..... 71-00-00 / 15
   4.1) Propeller shaft ..... 71-00-00 / 15
   4.2 Electric system ..... 71-00-00 / 15
5) Preservation and returning to service ..... 71-00-00 / 17
   5.1) Storage and preservation directives for a new engine ..... 71-00-00 / 17
   5.2) Preservation of an engine which has been in operation ..... 71-00-00 / 18
   5.3) Returning the engine to service ..... 71-00-00 / 18
6) Maintenance ..... 71-00-00 / 19
   6.1) Engine suspension frame ..... 71-00-00 / 19
      6.1.1) Engine suspension frame disassembly ..... 71-00-00 / 19
      6.1.2) Engine suspension frame inspection ..... 71-00-00 / 20
      6.1.3) Engine suspension frame assembly ..... 71-00-00 / 20
   6.2) Temperature- and pressure observation ..... 71-00-00 / 22

d02621

NOTES

d02621

2) System description

2.1) Description of design

All ROTAX engines of the 912/914 Series consist of several main components and additional aggregates which are described in the following sections.

On the 912 Series: 4-cylinder horizontally opposed 4 stroke engine with a central camshaft pushrods OHV.

On the 914 Series: 4-cylinder horizontally opposed 4 stroke engine with turbocharger and electronic control of boost pressure control (TCU = turbocharge control unit) and a central camshaft - push-rods OHV

Liquid cooled cylinder heads

Ram air cooled cylinders

Dry sump forced lubrication

Dual breakerless capacitor discharge ignition

2 constant depression carburetors

On the 912 Series: 1 mechanical fuel pump

On the 914 Series: 2 electric fuel pumps (12V DC)

Propeller drive via reduction gearbox with integrated mechanical shock absorber and overload clutch

◆ NOTE: The overload clutch is fitted **in serial production** on both certified aircraft and uncertified aircraft engines of configuration 3.

On the 914 Series: Stainless steel exhaust system

On the 912 Series: Individual parts of the exhaust system (optional), usually fitted by aircraft manufacturer

On the 912 Series: engine suspension frame, **optional**

On the 914 Series: engine suspension frame **in serial production**

Electric starter (12 V 0,6 kW / **optional**: 12 V 0.9 kW)

Integrated AC generator with ext. rectifier-regulator (12V 20A DC)

External alternator (12V 40A DC), **optional**

Vacuum pump: (only possible for Type 2 and Type 4), **optional**

Hydraulic constant speed propeller governor: (only for Type 3), **optional**

d02621

2.2) Type description

e.g. ROTAX 914 F 2

◆ NOTE: The type description is composed as follows:

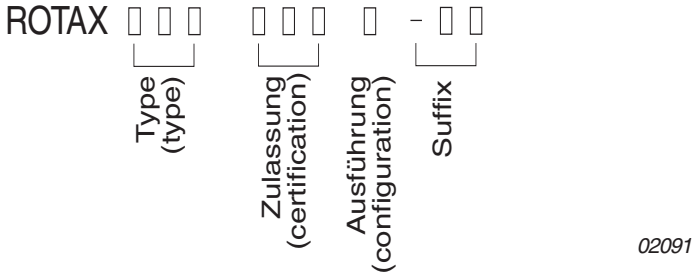

Type: **914** 4-cylinder horizontally opposed turbo engine

Certification: **F** certified in accordance with FAR/ JAR-E (TW10 - ACG)

UL noncertified aircraft engines

Series **2:** Propeller shaft with flange for fixed pitch propeller

3 : Propeller shaft with flange for variable pitch propeller and drive for hydraulic controlled constant speed propeller governor.

4 : Propeller shaft with flange for fixed pitch propeller but prepared for retro-fitting of hydraulic controlled constant speed propeller.

◆ NOTE: The propeller flange and hub are the same on all three gearbox versions.

◆ NOTE: For the exact type description, see the latest Operators Manual for your specific engine.

d02621

2.3) Engine components, engine views, cylinder designation and description of main axes

See Figs. 71-1 to 71-4 for engines of the 912 Series

See Figs. 71-5 to 71-9 for engines of the 914 Series

AS power take off side

MS magneto side

A points of attachment (for engine transport)

◔ center of gravity

P zero reference point for all dimensions

◆ NOTE: Allow ±1 mm (0.04 in.) on all stated dimensions as manufacturing tolerance

x,y,z axes for system of coordinates

Cyl. 1	cylinder 1	**Cyl. 3**	cylinder 3
Cyl. 2	cylinder 2	**Cyl. 4**	cylinder 4

d02621

912 Series

Fig. *71-1*

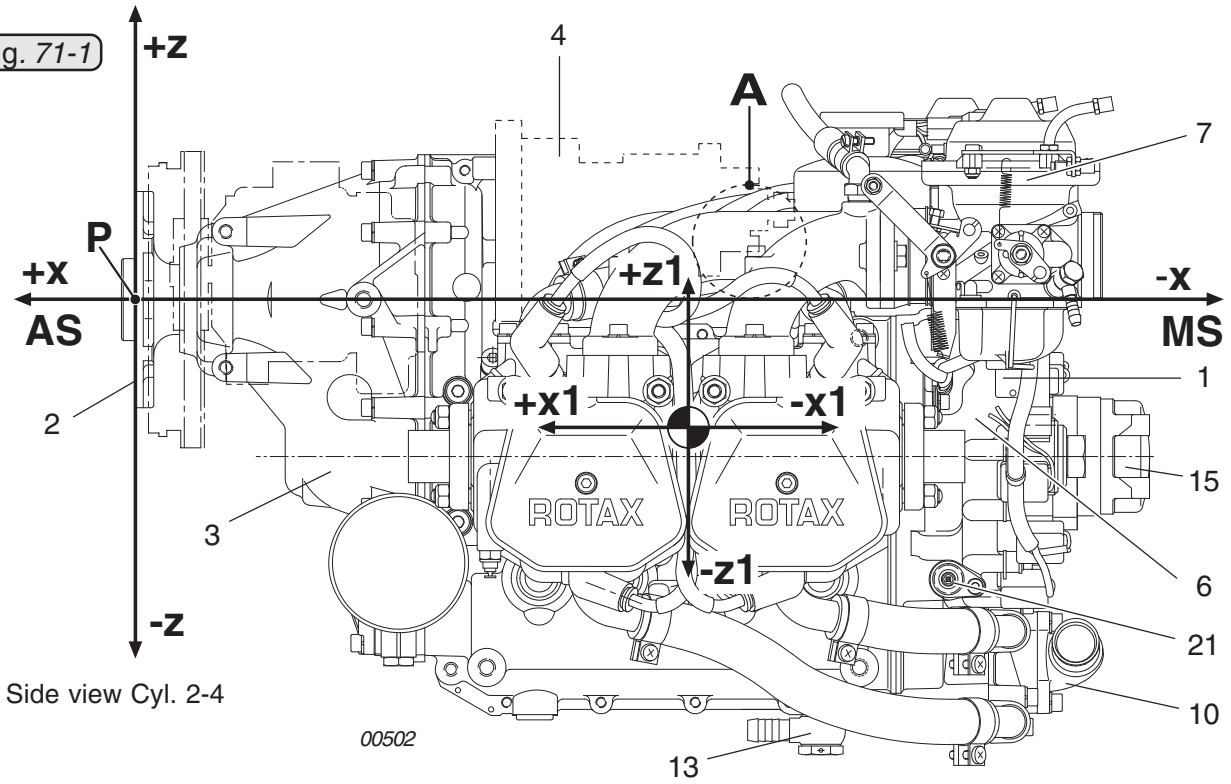

Side view Cyl. 2-4

(1) *Engine number*
(2) *Propeller flange*
(3) *Propeller gearbox*
(4) *Vacuum pump or hydraulically controlled constant speed propeller governor*
(5) *Intake manifold*
(6) *Ignition housing*
(7) *Constant depression carburetor*
(8) *Airbox (optional)*
(9) *Engine suspension frame (optional)*
(10) *Coolant pump*
(11) *Expansion tank*
(12) *Oil pump*
(13) *Connection for oil return line (engine)*
(14) *Oil filter*
(15) *Electric starter*
(16) *Electronic module*
(17) *Compensation tube*
(18) *Oil pressure sensor*
(19) *Oil temperature sensor*
(20) *2x sensor for cylinder head temperature*
(21) *Connection for mechanical rev counter*
(22) *Oil tank*
(23) *External alternator*
(24) *Magnetic plug*
(25) *Fuel pump*

d02621

912 Series

Fig. 71-2

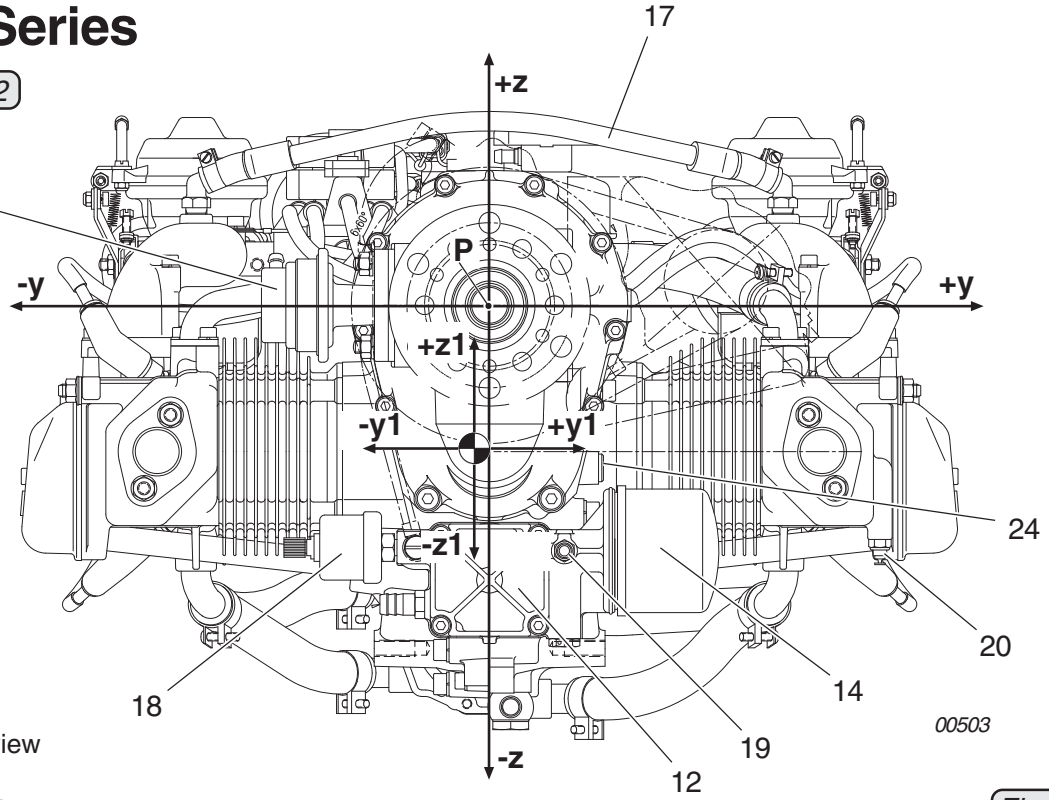

Front view

912 Series

Fig. 71-3

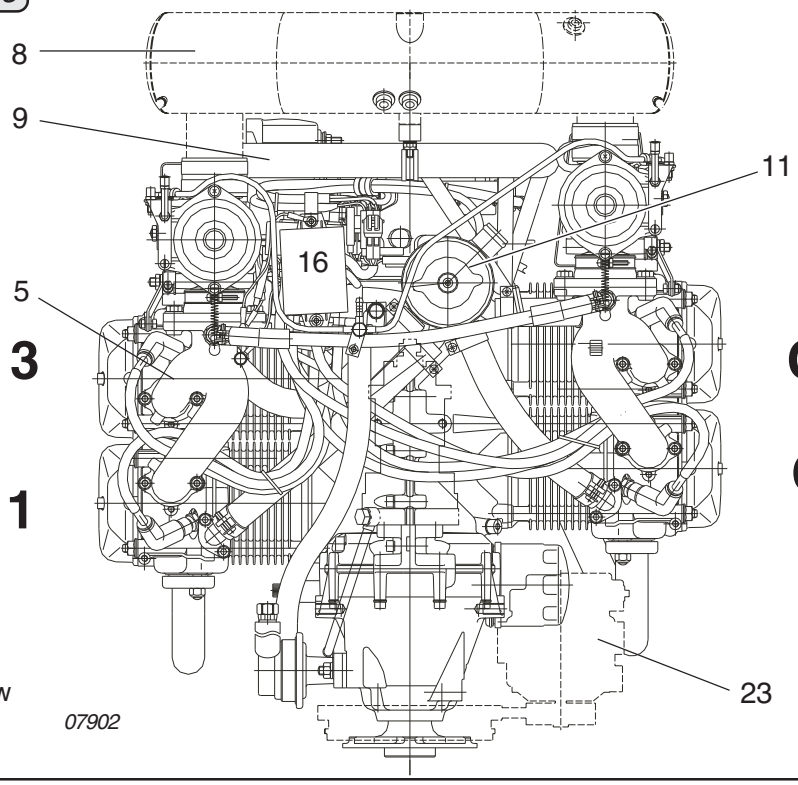

Top view

Fig. 71-4

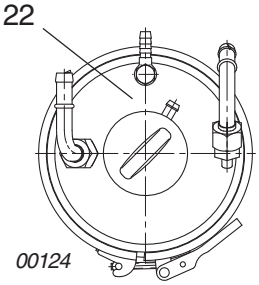

d02621

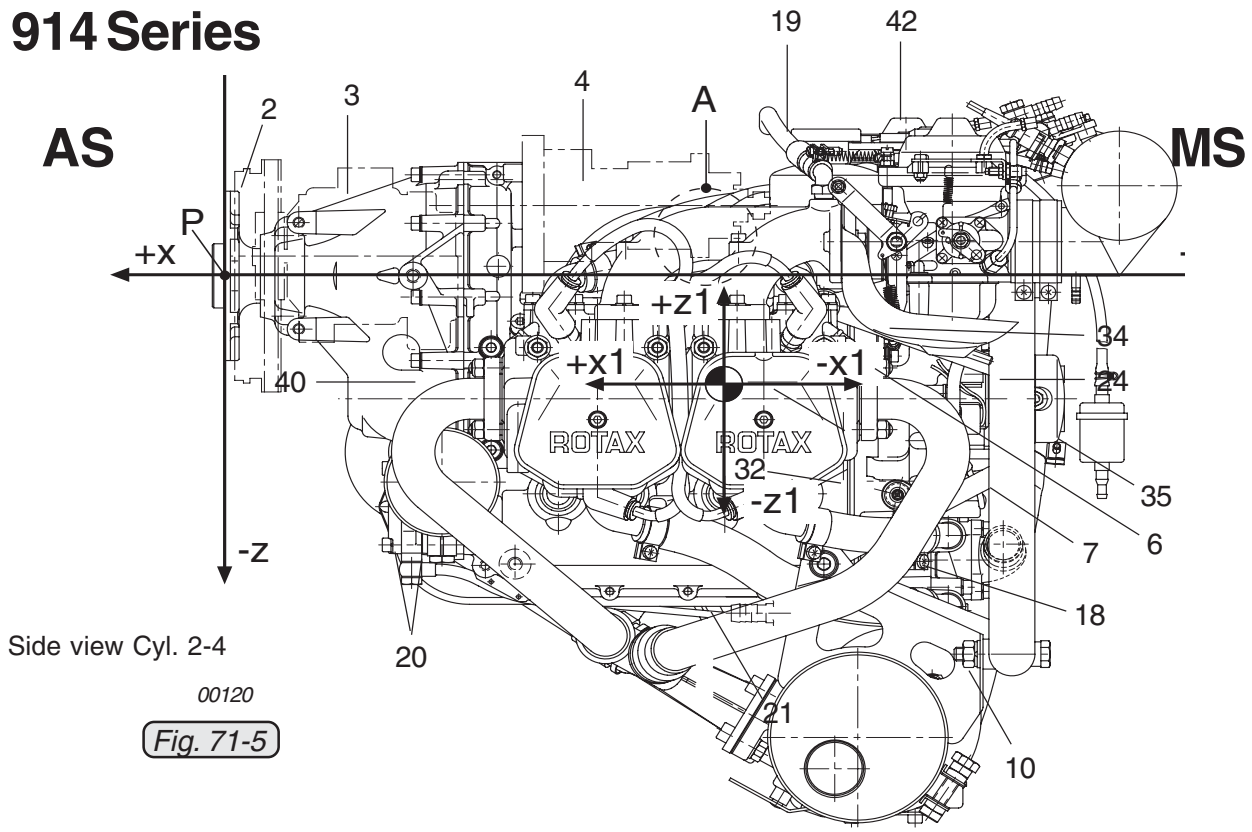

Side view Cyl. 2-4

00120

Fig. 71-5

(1) Engine number
(2) Propeller flange
(3) Propeller gearbox
(4) Vacuum pump or hydraulically controlled constant speed propeller governor
(5) Intake manifold
(6) Ignition housing
(7) Ignition cover
(8) Constant depression carburetor
(9) Airbox
(10) Engine suspension frame
(11) Stainless steel exhaust system
(12) Turbocharger
(13) Electronic turbo control unit (TCU)
(14) Fuel pressure regulator
(15) Servo motor
(16) Bowden cable
(17) Wiring harness
(18) Coolant pump
(19) Expansion tank
(20) 2 separate oil pumps
(21) Connection for oil return line (engine)
(22) Connection for oil return line (turbo)
(23) Oil filter
(24) Electric starter
(25) Electronic module
(26) Compensation tube
(27) Connection for boost pressure display
(28) Oil pressure sensor
(29) Oil temperature sensor
(30) 2x sensor for cylinder head temperature
(31) 2x pressure sensor
(32) Connection for mechanical rev counter
(33) Connection for additional temperature sensor (Airbox)
(34) Drip tray
(35) Condensation water trap (only on older engine versions)
(36) Solenoid valve
(37) 2x electric fuel pump
(38) Oil tank
(39) External alternator
(40) Magnetic plug
(41) Connection for additional temperature sensor
(42) Carburetor

d02621

914 Series

Fig. 71-6

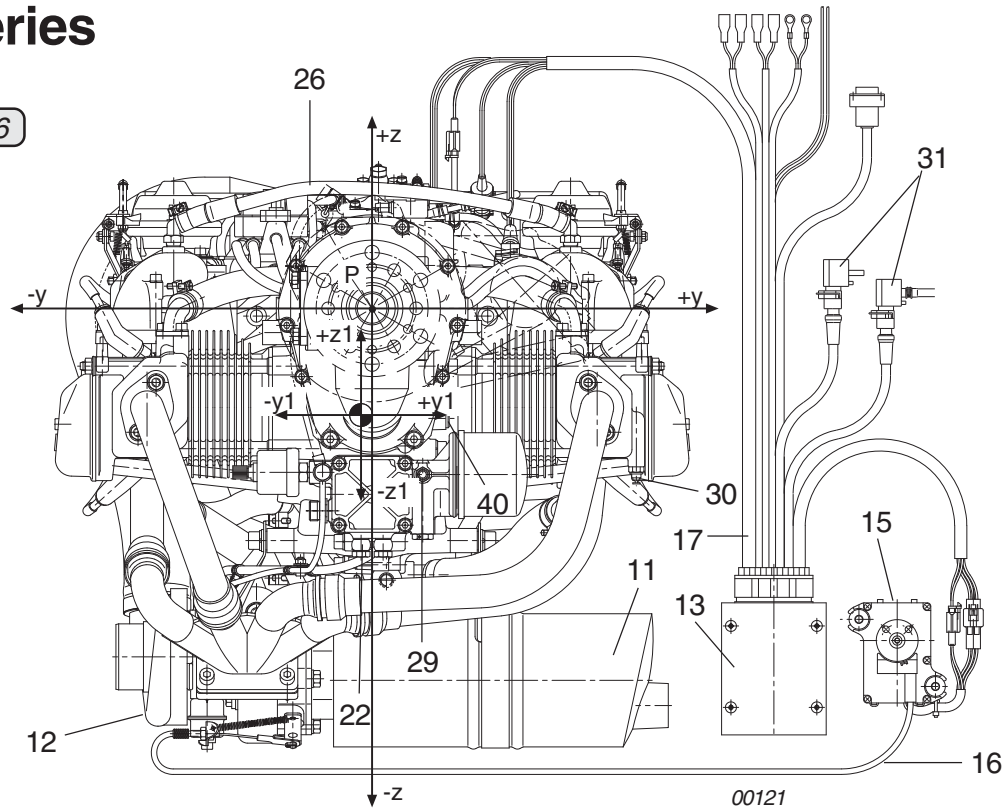

Front view

914 Series

Fig. 71-7

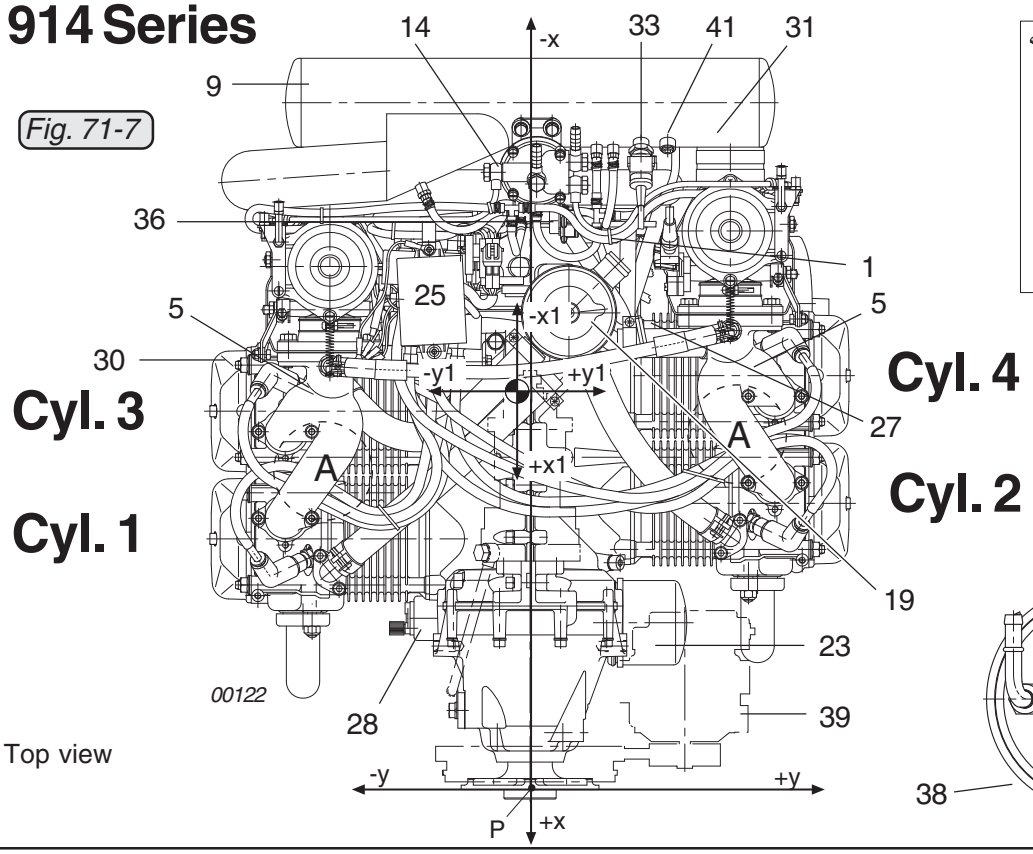

Top view

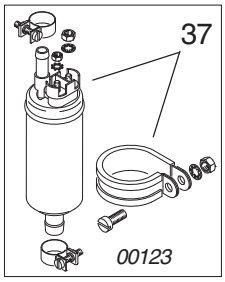

Fig. 71-8

Fig. 71-9

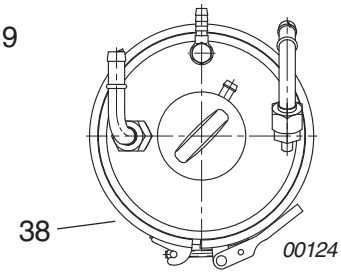

d02621

NOTES

d02621

3) Technical data

■ CAUTION: The technical data relevant for engine operation are listed in detail in the respective Operators Manual and must be observed.

3.1) Operating limits

See latest version of valid Operators Manual for the engine in question 912 Series or 914 Series, ¨Operating instructions“.

3.2) Operating fluids / Capacity

See latest version of valid Operators Manual for the engine in question 912 Series or 914 Series, ¨Operating fluids“.

3.3) Weights

See latest version of valid Operators Manual for the engine in question 912 Series or 914 Series, ¨Technical data“.

d02621

3.4) Engine / Components

DESIGN:	4-cylinder horizontally opposed 4-stroke-engine
BORE:	79.5 mm (3.13 in.) [1) 3)] 84 mm (3.31 in.) [2)]
STROKE:	61.0mm (2.40in.)
DISPLACEMENT:	1211.2 cm^3 [1) 3)] 1352 cm^3 [2)]
CYLINDER:	Lightweight metal cylinder with Nikasil coated running surface
PISTON:	Lightweight cast metal piston with 3 piston rings
CYLINDER HEAD:	4 individual cylinder heads
COMPRESSION:	9 : 1 [1) 3)] 11.1 : 1 [2)]
INTAKE VALVE:	38 mm (1.49 in.), valve seat surface hardened
EXHAUST VALVE:	32 mm (1.26 in.) NIMONIC, armor welding at valve seat
VALVE CLEARANCE:	automatic compensation of clearance by hydraulic valve tappets
VALVE TRAIN:	OHV, hydraulic valve tappets, pushrods and rocker arms
CAMSHAFT:	steel, annealed, liquid nitriding
CONTROL TIME: (at 1 mm valve stroke):	[1) 3)] Io. 0° T.D.C. Oo. 48° before B.D.C. Ic. 48° after B.D.C. Oc. 0° T.D.C. [2)] Io. 2° before T.D.C. Oo. 48° before B.D.C. Ic. 48° after B.D.C. Oc. 2° after T.D.C.
CRANKSHAFT:	supported in 5 plain bearings, case hardened
COOLING:	liquid cooled cylinder heads, ram air cooled cylinders
LUBRICATION:	**1) Main oil pump circuit:** Dry sump forced lubrication system, trochoid pump driven by the camshaft, oil return by the blow-by gases **2) Suction pump circuit**:[3)] Extra trochoid pump driven by the camshaft returns oil from the lower oil sump of the turbocharger to the oil tank
OIL DELIVERY RATE:	**1) Main oil pump:** approx. 16 l/min. at 5500 rpm **2) Suction pump circuit:** [3)] approx. 4 l/min. at 5500 rpm

[1)] 912 A, F, UL
[2)] 912 S, ULS, ULSFR
[3)] 914 F, UL

d04775

IGNITION UNIT: ROTAX DCDI, interference suppressed

IGNITION POINT:

Differences between electronic module part no. 966726 and part no. 966727:		without advanced start	electronic module with advanced start
	fly wheel hub		
ignition point at start	966871 966872	4° Before T.D.C. 3° After T.D.C.	4° Before T.D.C. 3° After T.D.C.
time delay for ignition at start:		none	3 - 8 sec.
switching to advanced ignition:		from 650 to 1000 RPM depending on trigger gap	after the expiration of the time delay (3-8 sec.)
ignition timing in normal operation:		Circle A: 26° before T.D.C. Circle B: 26° before T.D.C. [1) 2)] Circle B: 22° before T.D.C. [3)]	Circle A: 26° before T.D.C. Circle B: 26° before T.D.C. [1) 2)] Circle B: 22° before T.D.C. [3)]

06301

FIRING ORDER: 1- 4 - 2 - 3

SPARK PLUGS: 12 mm (0.47 in.), DCPR7 [1)], DCPR8 [2)], X27EPR-U9 [3)]

ELECTRODE GAP: see Fig. 74-6 and dimension (SPO1) in 74-00-00

INTEGRATED ALTERNATOR: Permanent magnet-singlephase alternator (approx. 250 W AC)

RECTIFIER-REGULATOR: 12 V 20 A DC

EXTERNAL ALTERNATOR: (optional) 12 V 40 A DC with full-wave rectifier-regulator

CARBURETOR: 2x Bing-constant depression carburetors 32 mm, Type 64

FUEL PUMP: 2 electric fuel pumps [3)]
1 mechanically driven fuel pump [1) 2)]

STARTER: electric starter, 12 V/0.6 kW, optionally 0.9 kW

PROPELLER GEARBOX: integrated spur gear with torsional shock absorbing, overload clutch, on UL optionally without overload clutch

GEAR TRANSMISSION: 2.27 [1)], 2.43 [2) 3)]

d05736

[1)] 912 A, F, UL
[2)] 912 S, ULS, ULSFR
[3)] 914 F, UL

DIRECTION OF ROTATION:	counterclockwise, seen from the front in the direction of the propeller flange
OVERLOAD CLUTCH:	multi-disk clutch
VACUUM PUMP (optional):	drive via the gearbox
PROPELLER PITCH GOVERNOR (optional):	drive via the gearbox
TURBOCHARGER:	Exhaust gas turbine with wastegate, radial-flow compressor T25 [3)]
TURBOCHARGER CONTROL UNIT (TCU):	electronic, proportional plus integral plus derivative regulator with 2 external indicating lamps [3)]
CERTIFICATION:	912 A: in acc. with JAR 22 912 F: in acc. with FAR 33 912 S: in acc. with FAR 33 and JAR-E 914 F: in acc. with FAR 33 and JAR-E
CERTIFICATION	912 A: EASA.E.121, E00051 EN 912 F: EASA.E.121, E00051 EN 912 S: EASA.E.121, E00051 EN 914 F: EASA.E.122, E00058 EN

d04775

4) Treatment of corrosion and surface damage

In the case of long standstill times, a rust film may form on various metal parts. Severely or heavily corroded screws, nuts, washers, bearings, bushes etc., must be replaced.

4.1) Propeller shaft

The flange should be lightly greased to prevent surface rust forming, see 72-00-00 / sec. 3.9.10.

4.2 Electric system

See 74-00-00 / sec. 3.1.

d02621

NOTES

d02621

5) Preservation and returning to service

5.1) Storage and preservation directives for a new engine

The engine is preserved at BRP-Powertrain thus guaranteeing proper protection against corrosion damage for at least 12 months after the date of delivery from BRP-Powertrain.

This warranty confirmation is subject to the following conditions:

- The engine must be stored in the original packing as supplied by BRP-Rotax.
- The protective covers must not be removed.
- The engine must be stored in a suitable place (closed area, clean and dry).

If the engine is stored longer than 12 months, the following inspections must be carried out every 3 months:

- Remove one spark plug on each cylinder and turn crankshaft by hand 2 full turns. Refit spark plug.
- Visual inspection for corrosion (e.g. on propeller shaft). If corrosion is detected, the engine must be sent immediately to an authorized overhaul facility for inspection.

▲ WARNING: The engine must not be taken into operation.

◆ NOTE: The maximum possible storage period of the engine is limited to 24 months.

If this storage period is exceeded, inspect following steel components for corrosion:

- camshaft, crankshaft, gear set and propeller shaft

If corrosion is detected, the engine must be sent immediately to an authorized overhaul facility for inspection.

d05736

5.2) Preservation of an engine which has been in operation

Due to the special coating of the cylinder wall, the ROTAX aircraft engine normally needs no extra protection against corrosion.

■ **CAUTION:** Maximum storage period 12 months if the listed precautions are taken!

– Oil change see latest issue Maintenance Manual (Line Maintenance) for the respective engine type, 912 Series or 914 Series.

– On the ROTAX 912 Series: Run the engine to allow it to warm up, leave it running at increased idle speed, remove the air filters and inject approx. 30 cm^3 of preservation oil into the carburetors, shut down the engine.

– On the ROTAX 914 Series: Remove the top spark plugs from all four cylinders and spray preservation oil into the cylinders through the spark plug bores.

  Turn the crankshaft several times.

  Fit spark plugs and spark plug connectors.

– Drain carburetor float chambers.

– Apply engine oil to all linkages on carburetors.

– Close all openings on the cold engine, such as the exhaust pipe, venting tube and air filter intake against entry of dirt and humidity.

– Spray all external engine steel parts with preservation oil.

– In the event of longer out of service periods repeat the whole preservation procedure annually.

5.3) Returning the engine to service

– Remove all plugs and fasteners.

– Clean spark plugs with solvent and a plastic brush.

– If preservation including oil change took place not longer than a year ago, oil replacement will not be necessary.

– Complete 100 hour inspection if engine has been out of service for more than one year.

▲ WARNING: Work on the engine may only be carried out and approved by authorized persons. See the latest issue Maintenance Manual (Line Maintenance) for the respective engine type, 912 Series or 914 Series.

d04775

6) Maintenance

The following sections describe maintenance procedure for engines of the 912/914 Series above and beyond the maintenance and special checks, see latest issue Maintenance Manual (Line Maintenance) for the respective engine type, 912 Series or 914 Series, and the systems descriptions given hitherto. The description is divided into subsections and descriptions of the function of the various systems.

6.1) Engine suspension frame

6.1.1) Engine suspension frame disassembly

See Figs. 71-10 and 71-11.

▲ WARNING: Perform tasks only on the cold engine. **Danger of burns!**

◆ NOTE: Prior to detachment of the engine suspension frame (1), remove the water pump housing (2), as the coolant sockets, which protrude outwards, would hinder removal of the engine suspension frame. See 75-00-00 sec. 3.

After removal of the two allen screws M10x110 (3) and M10x35 (4) together with the lock washers, the engine suspension frame can be taken off.

◆ NOTE: On engines of the 914 Series, it will also be necessary to remove the muffler and the turbocharger. See 78-00-00 sec. 3.

d02621

6.1.2) Engine suspension frame inspection

See Fig. 71-11

– All components must be subjected to a visual inspection.

■ CAUTION: If the engine is fitted with engine suspension frame part no. 886567, inspection in accordance with SB-912-028 or SB-914-016,“Checking or replacement of engine suspension frame“, latest issue must be performed.

◆ NOTE: A detailed visual inspection of the engine suspension frame in the area of all welded joints between the circular pipe (1) and the struts (6).

◆ NOTE: If necessary, the engine may be flown to a repair facility as long as not more than 50% of the tube or the strut are severed. If they are completely severed, they must be replaced immediately.

6.1.3) Engine suspension frame assembly

See Figs. 71-10 and 71-11.

Screw the engine suspension frame (1) to the engine housing with the lock washers and the allen screw M10x110 (3) and M10x35 (4), tightening to 40 Nm (29.5 ft.lb) in each case.

◆ NOTE: Ensure that the engine suspension frame is attached free of stress. If necessary, fit the shims as needed (5).

◆ NOTE: The allen screws (4) must be of strength 10.9. See SI-25-1997,“Running modifications“, latest issue.

– On engines of the 914 Series, reattach the muffler and the turbocharger. See 78-00-00 sec. 3.5.

d04775

Fig. 71-10

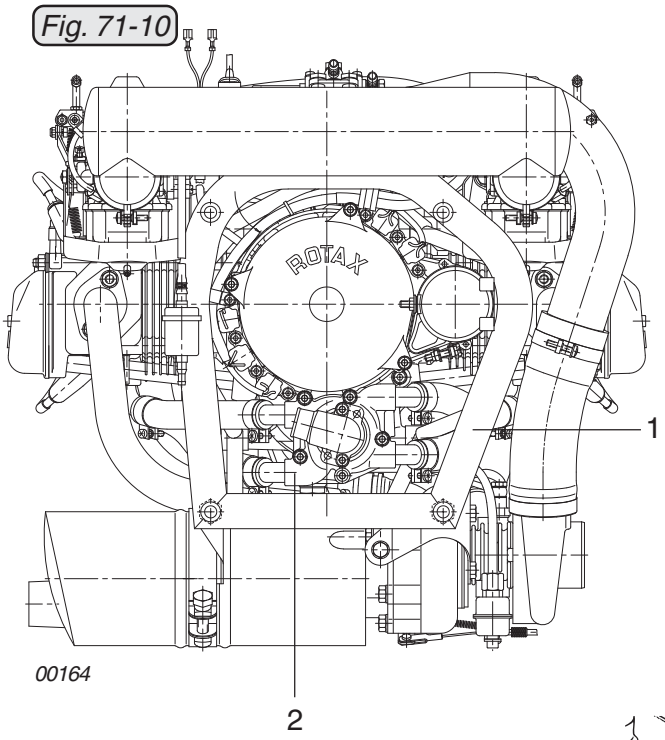

Fig. 71-11

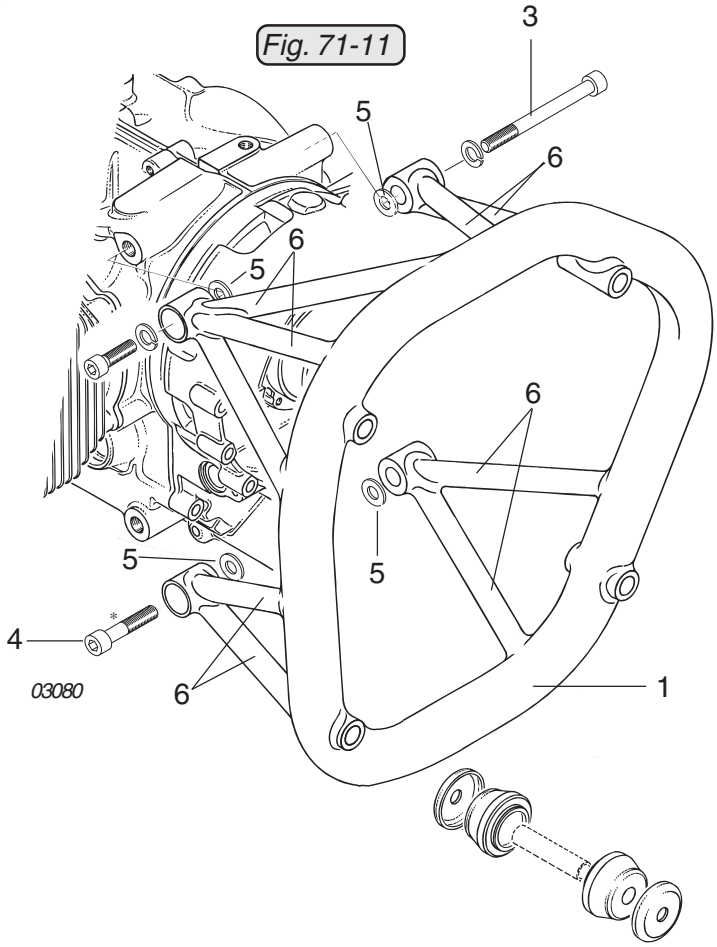

d02621

6.2) Temperature- and pressure observation

Engines of the 912 Series and 914 Series are equipped with two temperature control points on the cylinder heads for the coolant, one temperature control point for the oil temperature and a pressure control point for the oil pressure.

On engines of the 914 Series: The engine is also equipped with control points for measurement of the airbox pressure, airbox temperature and the ambient pressure.

d02621

SECTION 72

ENGINE

1) Table of contents

SECTION 72
ENGINE

1) Table of contents ..... 72-00-00 / 1
2) Systems description ..... 72-00-00 / 5
2.1) Propeller gearbox ..... 72-00-00 / 5
2.1.1) Gearbox version ..... 72-00-00 / 5
2.2) Hydraulic governor ..... 72-00-00 / 7
2.3) Vacuum pump ..... 72-00-00 / 8
2.4) Connections for instrumentation ..... 72-00-00 / 8
2.4.1) Mechanical rev counter and hourmeter (optional) ..... 72-00-00 / 8
3) Maintenance ..... 72-00-00 / 9
3.1) Vacuum pump removal and inspection ..... 72-00-00 / 9
3.2) Governor removal and inspection ..... 72-00-00 / 10
3.3) Removal of the fly wheel hub ..... 72-00-00 / 10
3.4) Ignition housing removal and inspection ..... 72-00-00 / 11
3.5) Ignition housing fitting ..... 72-00-00 / 14
3.6) Sprag clutch ..... 72-00-00 / 15
3.6.1) Sprag clutch removal ..... 72-00-00 / 16
3.6.2) Sprag clutch dismantling ..... 72-00-00 / 17
3.6.3) Sprag clutch installation ..... 72-00-00 / 18
3.7) Reduction gear for electric starter ..... 72-00-00 / 20
3.8) Rev counter drive ..... 72-00-00 / 21

d04776

3.9) Propeller gearbox ..... 72-00-00 / 22
3.9.1) Removal of roller bearing for - Series 2 ..... 72-00-00 / 24
3.9.2) Removal of roller bearing for - Series 3 ..... 72-00-00 / 26
3.9.3) Removal of roller bearing for - Series 4 ..... 72-00-00 / 27
3.9.4) Propeller gearbox disassembly ..... 72-00-00 / 28
3.9.5) Propeller shaft removal ..... 72-00-00 / 30
3.9.6) Vacuum pump drive removal ..... 72-00-00 / 32
3.9.7) Propeller governor drive removal ..... 72-00-00 / 33
3.9.8) Drive of the propeller governor installation ..... 72-00-00 / 35
3.9.9) Vacuum pump drive installation ..... 72-00-00 / 38
3.9.10) Gearbox components inspection ..... 72-00-00 / 39
3.9.11) Toothed shaft profiles´inspection ..... 72-00-00 / 43
3.9.12) Gear set (gear wheels) inspection ..... 72-00-00 / 44
3.9.13) Propeller gearbox reassembly ..... 72-00-00 / 49
3.9.14) Disc spring pre-tension adjustment (with overload clutch) ... 72-00-00 / 51
3.9.15) Disc spring pre-tension adjustment (with dog hub) ..... 72-00-00 / 51
3.9.16) Propeller gearbox — installation ..... 72-00-00 / 53
3.10) Cylinder head — removal ..... 72-00-00 / 55
3.11) Cylinder head - disassembly ..... 72-00-00 / 57
3.11.1) Cylinder head and studs ..... 72-00-00 / 59
3.11.2) Reworking of the sealing surface to the exhaust manifold .... 72-00-00 / 61
3.11.3) Valve guides ..... 72-00-00 / 62
3.11.4) Valve seats ..... 72-00-00 / 63
3.11.5) Valves ..... 72-00-00 / 64
3.11.6) Valve springs ..... 72-00-00 / 67
3.11.7) Washers ..... 72-00-00 / 69
3.11.8) Rocker arm and rocker arm shaft ..... 72-00-00 / 70
3.11.8.1) Rocker arm with plastic bushing ..... 72-00-00 / 71
3.11.8.2) Rocker arm with pressed sinter bushing ..... 72-00-00 / 72
3.11.8.3) Rocker arm shaft ..... 72-00-00 / 72
3.12) Cylinder head reassembly ..... 72-00-00 / 73
3.13) Cylinder and piston - removal ..... 72-00-00 / 75
3.13.1) Checking pistons ..... 72-00-00 / 77
3.13.2) Checking the piston ring ..... 72-00-00 / 79
3.13.3) Piston pin ..... 72-00-00 / 80
3.13.4) Cylinders inspection ..... 72-00-00 / 81
3.14) Hydraulic valve tappets ..... 72-00-00 / 83
3.15) Pushrods ..... 72-00-00 / 85

d04351

3.16) Piston and cylinder assembly fitting ..... 72-00-00 / 86
3.16.1) Hydraulic valve tappets fitting ..... 72-00-00 / 86
3.16.2) Pistons fitting ..... 72-00-00 / 86
3.16.3) Cylinders fitting ..... 72-00-00 / 90
3.16.4) Cylinder head fitting ..... 72-00-00 / 92
3.17) Intake manifold and compensation tube assembly ..... 72-00-00 / 95
|| 3.18) Crankshaft inspection ..... 72-00-00 / 95
4) Wear limits ..... 72-00-00 / 97
5) Form Sheets ..... 72-00-00 / 117
5.1) Form sheet for material testing ROTAX 912/914 Series ..... 72-00-00 / 117
5.1.1) Inspection on cracks ..... 72-00-00 / 117
5.1.2) Hardness test ..... 72-00-00 / 117

d04351

NOTES

d02622

2) Systems description

2.1) Propeller gearbox

See Fig. 72 -1

Transmission gear ratio crankshaft: propeller shaft **2.43 : 1** [2), 3), 4)] ; **2.27 : 1** [1)]

The propeller shaft is driven by the crankshaft via a straight toothed spur gear (1).

The propeller gearbox incorporates a torsional shock absorbing device. This consists of a torsional shock absorber with dogs (2) and axial springloading by means of disc springs (3).

The design also includes a friction damped free rotation at the dogs to ensure smooth engine idling. Due to this free rotation, a distinct torsional impact arises at engine start and stop and in the event of sudden load changes, but due to the integrated overload clutch it will remain harmless.

◆ NOTE: This overload clutch (4) will also prevent any undue load on the crankshaft in the event of the propeller having ground contact.

◆ NOTE: The overload clutch is fitted **in serial production** on both certified aircraft and uncertified aircraft engines of configuration 3.

2.1.1) Gearbox version

See Fig. 72 -1

There are 3 gearbox configurations for the 912/914 Series. See 71-00-00 sec. 2.2

[1)] 912 A, F, UL
[2)] 912 S, ULS, ULSFR
[3)] 914 F, UL
[4)] 912 A, F, UL - optional

d02622

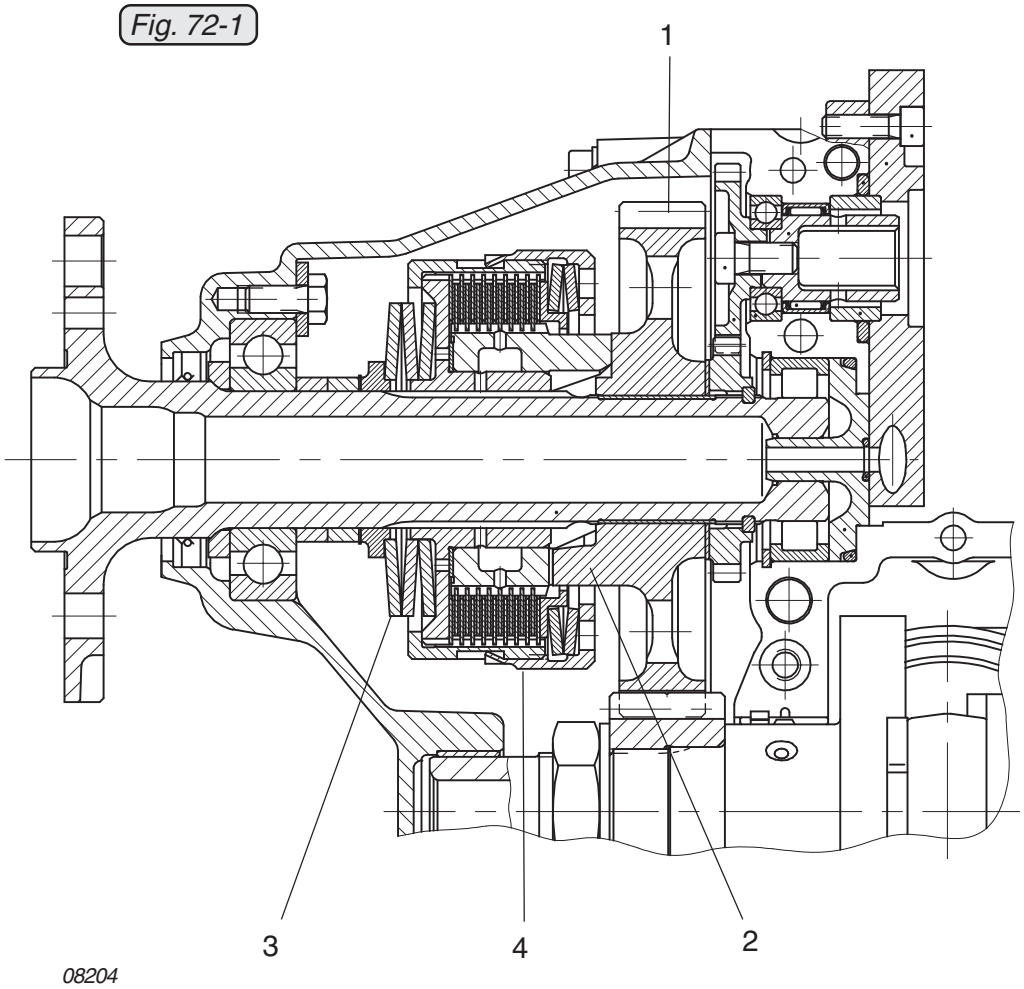

Configuration 3
with overload clutch

d02622

2.2) Hydraulic governor

See Fig. 72 -2

◆ NOTE: Not included in the range of delivery.

A hydraulic governor can be fitted on engines of the 912/914 Series configuration 3 to control a hydraulic constant speed propeller. Engines of the 912/914 Series configurations 2 and 4 can be retrofitted for this purpose.
i.e., the drive for the governor in the propeller gearbox and the crankcase, its connection cable and the oil feed line to the propeller shaft must be retrofitted.

– On configuration 912/914 - 2, the hollow propeller shaft must also be exchanged for the correct one.
– On configuration 912/914 - 4, the propeller shaft can remain. It is the same design as for configuration 912/914 - 3, with the exception that the inside bore is plugged. After removal of the plug cover the propeller shaft is suitable for use with a governor.

Gear ratio (i)	912 A/F/UL		912 S/ULS/ULSFR 914 Series	
crankshaft : propeller shaft	50 : 22	2.273*	51 : 21	2.429
propeller shaft : governor	22 : 29	0.759	22 : 29	0.759
Total	1.722		1.842	

* optional 2.429 possible

08218

Fig. 72-2

◆ NOTE: Installation of both the hydraulic governor and vacuum pump is not possible.

◆ NOTE: The gear ratio crankshaft to vacuum pump or propeller governor is 1.722 or 1.842, depending on engine type.

Direction of rotation of the governor ..... counterclockwise (CC), looking from the magneto side above onto the governor flange.

d02622

2.3) Vacuum pump

It is possible to install a vacuum pump for employment of an inertial navigation system. To do this, the drive kit for the vacuum pump must be retrofitted on propeller gearbox and crankcase.

◆ NOTE: Installation of both the vacuum pump and hydraulic governor is not possible.

Gear ratio: Vacuum pump and hydraulic governor are driven the same way and therefore have an equivalent gear ratio. See hydraulic governor.

2.4) Connections for instrumentation

■ CAUTION: Consult also the relevant section on connections for instrumentation in the Installation Manual.

2.4.1) Mechanical rev counter and hourmeter (optional)

These are driven from the camshaft via a bevel gear to the rev counter shaft. A flexible shaft allows connection of a combined instrument, rev counter or hourmeter. Subsequent installation of a flex. rev counter shaft is possible after removal of the rev counter cover on the ignition housing. On engines produced from the year 2007 onwards, it is also necessary to replace the ignition cover and press the worm gear into the camshaft using the tool with part no. 877190.

For connection of a rev counter, see 71-00-00 sec. 2.3 item no. 21 (on 912 Series) or item no. 32 (on 914 Series).

The total transmission ratio from crankshaft to rev counter shaft i = 4

◆ NOTE: As the mechanical hourmeter is directly coupled to the engine speed, the readings may deviate considerably from those given by electronic hourmeters (e.g. TCU, FlyDat). Maintenance and overhaul intervals are always dictated by the operation period.

d05737

3) Maintenance

The following sections describe maintenance procedure for engines of the 912/914 Series above and beyond the maintenance and special checks, see latest issue Maintenance Manual (Line Maintenance) for the respective engine type, 912 Series or 914 Series, and the systems descriptions given hitherto. The description is divided into subsections and descriptions of the function of the various systems.

3.1) Vacuum pump removal and inspection

See Fig. 72-3.

■ CAUTION : Observe the vacuum pump manufacturers specifications for maintenance, inspection and repairs!

Unscrew the 4 hex. nuts (1) M6 and remove the lock washers. Remove the vacuum pump (2) from the crankcase (4) together with the gasket and the retaining flange (3).

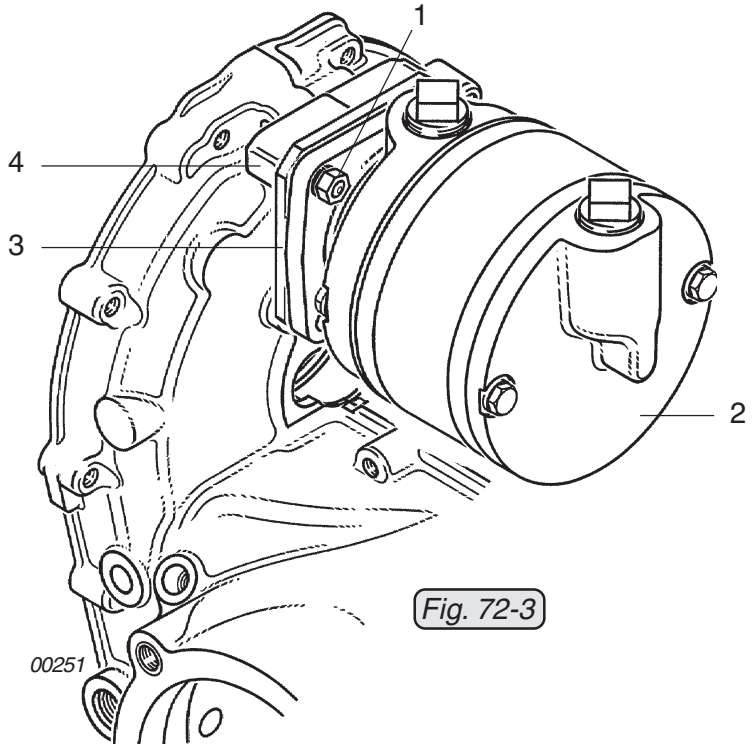

Fig. 72-3

d04776

3.2) Governor removal and inspection

See Fig. 72-34 in 72-00-00.

■ CAUTION : Observe the governor manufacturers specifications for maintenance and repairs!

Unscrew the 3 allen screws (16) M8x40 and the 1 allen screw (17) M8x35 and remove together with the lock washers. Remove the governor with the gasket.

◆ NOTE: The screwing can be different depending on the type of governor. See SB-912-052 and/or SB-914-035, " Installation / Use of governor", latest issue.

3.3) Removal of the fly wheel hub

See Fig. 72-4

Remove hex. screw M16x1.5 (1). Place protection piece part no. 877410 on the crankshaft, screw puller part no. 877375 down fully and press off the fly wheel hub (2) with the hex. screw.

Fig. 72-4

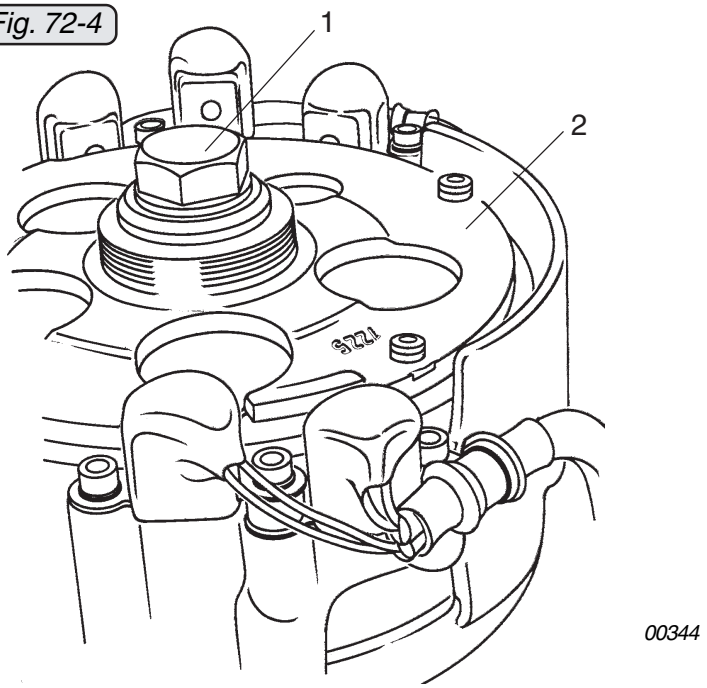

d04776

3.4) Ignition housing removal and inspection

See Figs. 72-5, 72-6, 72-7 and 72-8.

Cut the tie wraps and remove the cable clamp from the electronic module. Detach the plug connections of the two pickup cables and the plug connections of the charging cable. Detach both plug connectors of the alternator cable and the control wiring for the electronic rev counter. See 74-00-00 sec. 3.15.

Decide whether the stator may remain in the ignition housing. Otherwise remove the cable clamps and remove the stator.

Remove the woodruff key (1) from the crankshaft.

■ CAUTION: Cover the groove for the woodruff key (1) with a protective tape to avoid damage to the oil seal, see Fig. 72-3.

Remove the electric starter. See 80-00-00 sec. 3.1.

Remove the 7 allen screws M6 from the ignition cover on the bottom side of the ignition cover from the crankcase. A smart blow with a mallet will separate the ignition cover (3) from the crankcase so that it can be taken off.

Remove the O-ring (2).

◆ NOTE: The crankshaft bearings in the ignition housing are lubricated via the oil duct (4). The oil duct at the joining face between the crankcase and the ignition housing is sealed by the O-ring (2) 5x2.

◆ NOTE: The thrust washer of the intermediate starter gear may be stuck on the rear side of the ignition housing.

Fig. 72-5

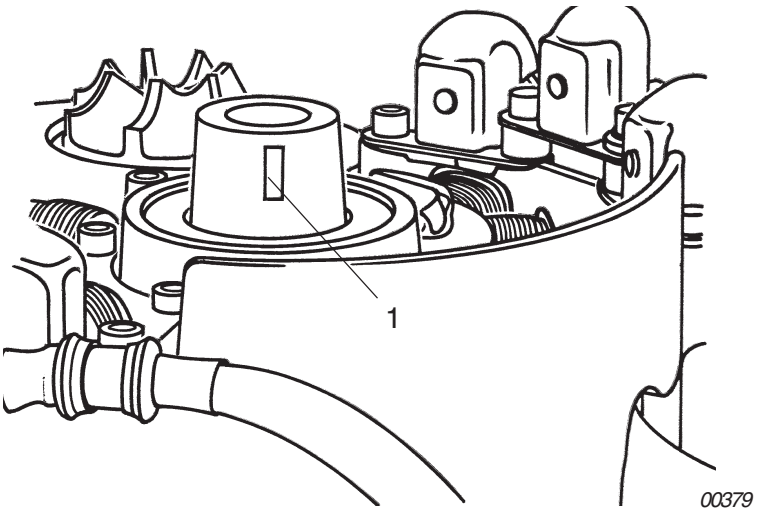

d02622

Fig. 72-6

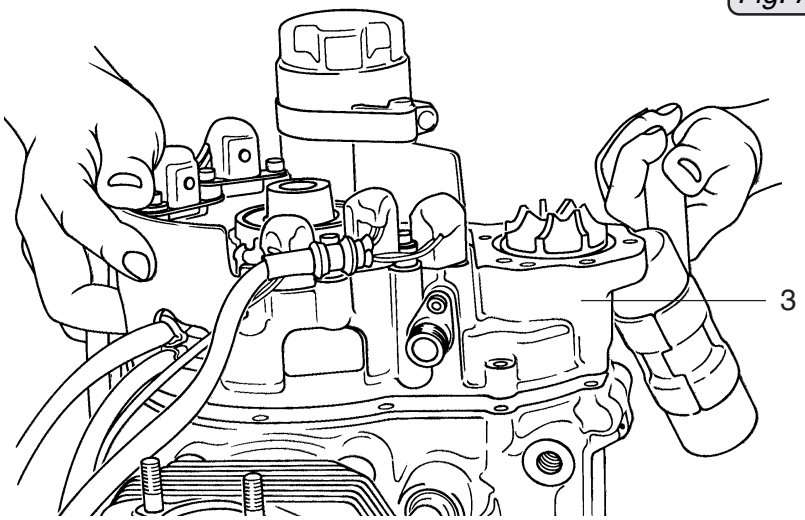

00381

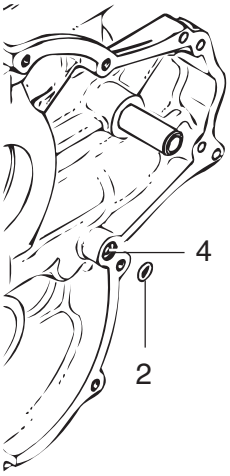

00382

Carry out a visual inspection of the sealing surfaces.
Clean oil duct (10) with compressed air and check for free passage. Measure the bearing bore Ø32 (1.26“) mm of the bearing bushing (11) (dimension (IH01)) for the crankshaft bearing (dimension (CS05)) and determine the clearance. See 72-00-00 sec. 4.

The bearing bushing (11) can not be replaced, as the internal bore and the lubricating bore (10) are machined after pressing in the bushing, if the bearing bushing (11) is worn, the complete ignition cover with pressed-in and machined bushing must be replaced.

Check the shaft seal (13) 32x52x7 for the crankshaft, if necessary, press new shaft seal into the block with an insertion jig, part no. 877270.

Check whether oil or water emerge from the outside of the leakage bore (14).

Check the rotary seal (15) for the water pump sealing. If liquid is leaking, replace the rotary seal and the shaft seal (16).

Carry out a visual inspection of the bearing (17) for the electric starter.

◆ NOTE: Fig. 72-8 item 18 is the drive shaft for the mechanical rev counter.

d04776

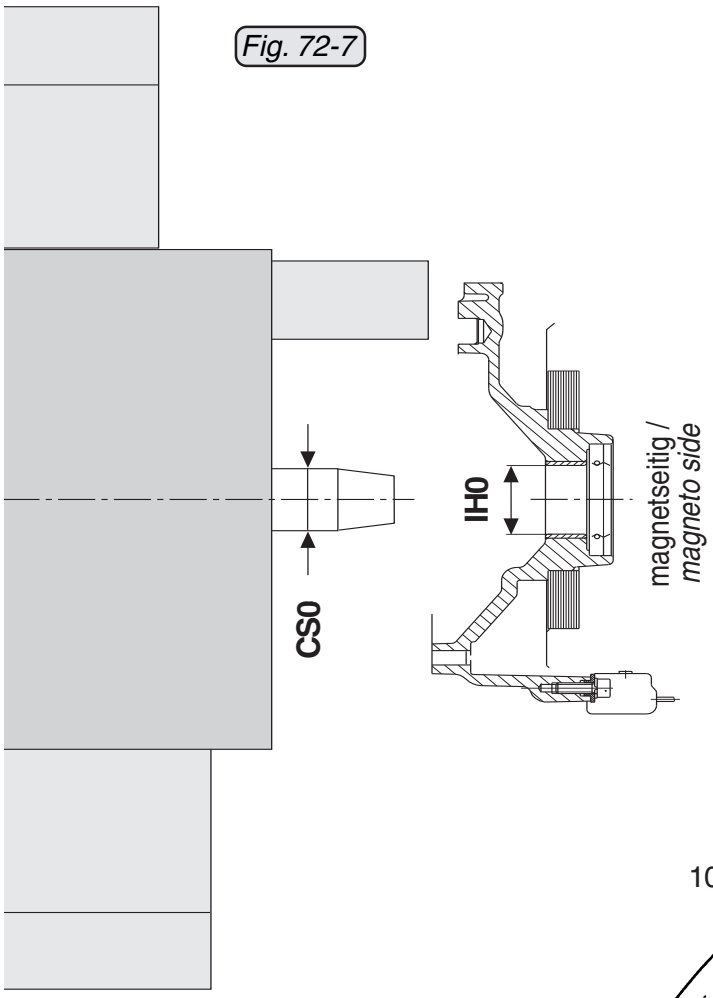

Fig. 72-7

00084

Fig. 72-8

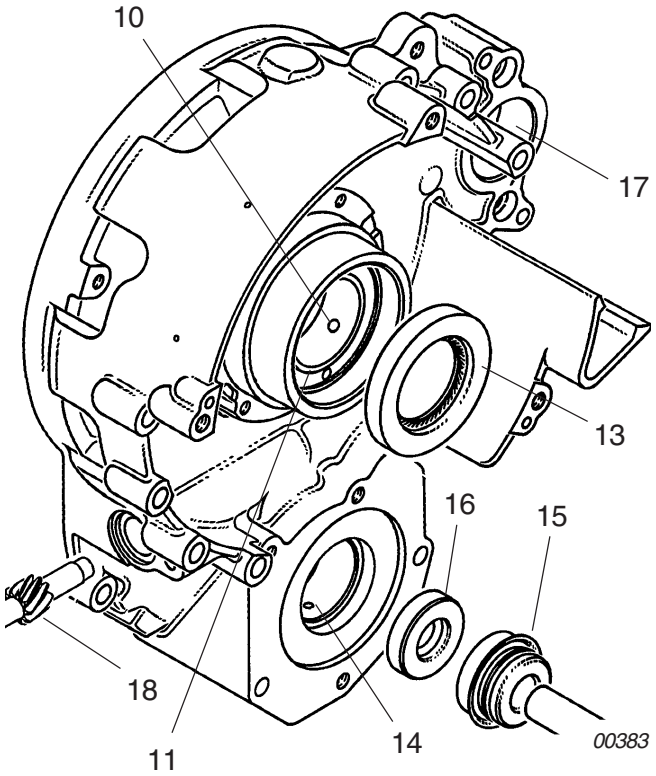

d02622

3.5) Ignition housing fitting

See Fig. 72-9.

Install the intermediate gear. See 72-00-00 sec. 3.7.

■ CAUTION: If the mounting sleeve, part no. 877360, is not used, the oil seal will be damaged by the sharp edge of the keyway in the crankshaft.

Place O-ring 5x2 into the crankcase and fit mounting sleeve, part no. 877360, for oil seal onto the crankshaft.

Apply LOCTITE 518 or 5910 surface sealing compound to the sealing surface (6) of the pre-assembled ignition cover, apply multi-purpose grease LZ or equivalent grease to the oil seal (7), fit it and turn the water pump shaft to engage it in the geartooth system. Tighten ignition cover with 7 allen screws M6x30 (8) and lock washers evenly to 10 Nm (90 in.lb.).

◆ NOTE: Allen screw (9) M6x30 extends into the oil compartment and must therefore be sealed with LOCTITE 243.

◆ NOTE: Fig. 72-9 item 10 is the drive shaft for the mechanical rev counter.

◆ NOTE: For fly wheel installation see 74-00-00 sec. 3.20.

Fig. 72-9

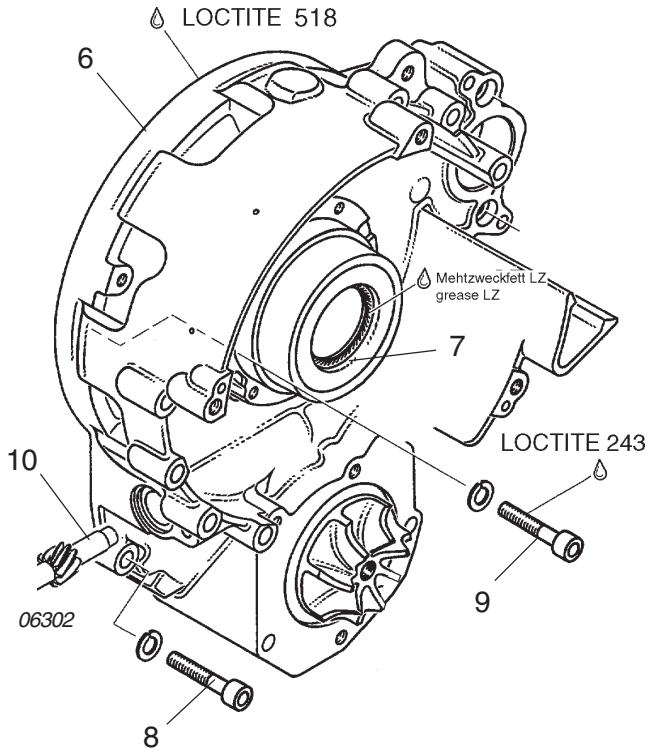

d04776

3.6) Sprag clutch

See Figs. 72-10 and 72-12.

After removing the fly wheel hub and the ignition housing, see 72-00-00 sec. 3.1 and 72-00-00 sec. 3.4, measure the axial clearance (ES10) of the free wheel gear (6).

See 72-00-00 sec. 4.

◆ NOTE: If there is no or too little axial clearance, the sprag clutch may not disengage and the electric starter may be damaged.

Fig. 72-10

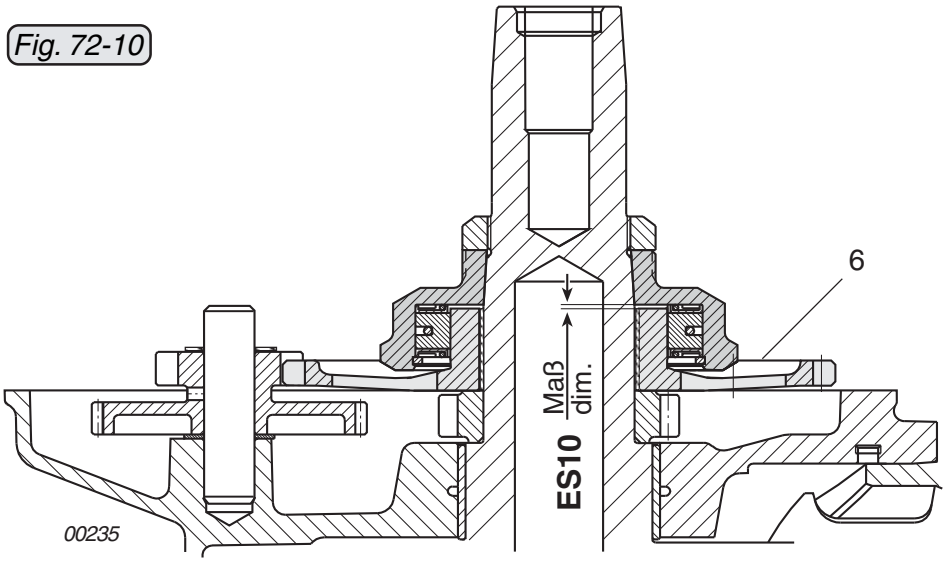

d02622

3.6.1) Sprag clutch removal

See Fig. 72-11.

Lock the crankshaft. See the latest issue Maintenance Manual (Line Maintenance) for the respective engine type, 912 Series or 914 Series.

Pull out the intermediate gear shaft (1) and remove the intermediate starter gear (2) with the thrust washers 12.5/21.5/1 (3) on both sides of the intermediate gear.

■ CAUTION : Use of impact wrench is not permitted, lock nut (4) must be heated.

Use a hot air gun to heat up hex. nut (4) M34x1.5 to about 100 to 120 °C (212 to 248 °F). Unscrew the hex. nut (4) M34x1.5 from the crankshaft using socket wrench a/f 46, part no. 877450.

◆ NOTE: The hex. nut (4) has a lefthanded thread!

Insert protection piece, part no. 877410, into the crankshaft and remove the sprag clutch housing (5) from the crankshaft with puller, part no. 877375.

The free wheel gear (6), the pump gear (10) pressed onto the camshaft and the timing gear (8) underneath it can be removed only after splitting the crankcase.

◆ NOTE: The mechanical rev counter is driven via the worm gear (7) pressed into the camshaft.

◆ NOTE: The worm gear (7) is optional on newer engine versions.

Fig. 72-11

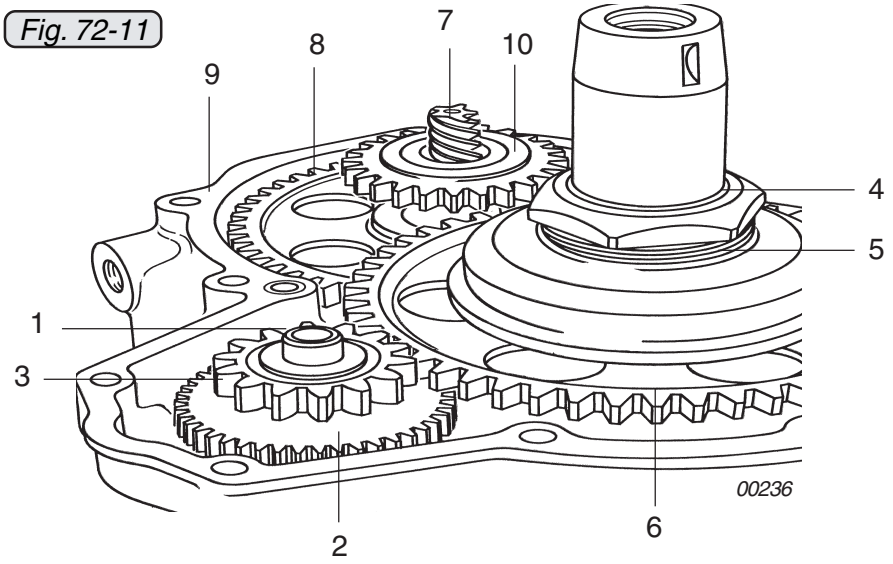

d04351

3.6.2) Sprag clutch dismantling

See Figs. 72-12 and 72-13.

Carry out a visual inspection to check whether oil sludge has been deposited in the sprag clutch housing (5) and in in the lock (16). For inspection/cleaning purposes, remove the circlip (14). Compress the circlip (19) in the sprag clutch (17) slightly with circlip pliers and twist the sprag unit out of the sprag clutch housing. Clean all parts thoroughly. The circumferential helical spring (15) must not be loose or distorted to a wavy form. Replace sprag clutch as required.

The cams (16) of the sprag clutch must move freely and the surface must be free of damage. Inspect the engaging surfaces of the sprag clutch in the sprag clutch housing.

If wear can be measured on the internal contact surfaces of the sprag clutch housing, the affected parts must be replaced. Check the tapered surface (18). Check the geartooth system (12), the engaging surface of the sprag clutch (11) on the free wheel gear and the bearing bushing (13).

Fig. 72-12

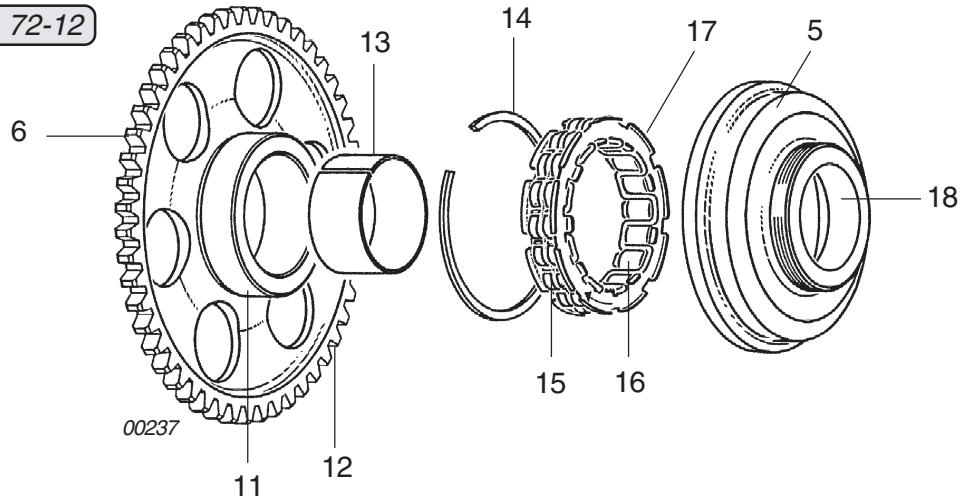

Fig. 72-13

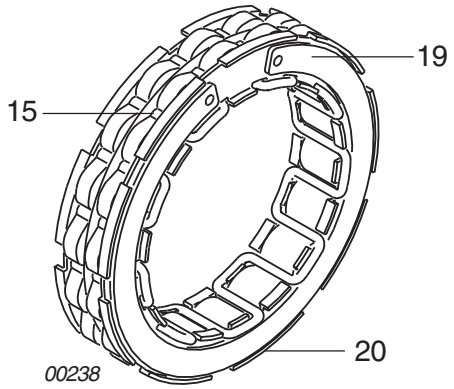

d02622

3.6.3) Sprag clutch installation

See Figs. 72-10, 72-11, 72-12, 72-13, 72-14 and 72-15.

Place the sprag clutch into the sprag clutch housing so that the circlip (19) is visible. To fit the circlip, compress it slightly using circlip pliers and ensure that clip remains in position and engages fully on the catches in the sprag unit (20).

■ CAUTION : The circlip must be fitted as shown in Fig. 72-15. Otherwise, it may not fit tightly.

Fit the circlip (14) with the sloping edge pointing towards the sprag clutch.

■ CAUTION : If there is a circlip 68 (14) part no. 845420 still fitted, it must be replaced with a circlip 70 part no. 845245.

◆ NOTE: Circlip 68 and circlip 70 can be distinguished by the different outside dimension before they are installed. See Fig. 72-15.

Lock the crankshaft. Degrease taper and threads of the crankshaft and taper of the sprag clutch housing.

■ CAUTION : Approx. 2 - 3 mm (0.079 - 0.12 in.) on the bottom side of the sprag clutch housing must be kept free of LOCTITE 603. If this instruction is not observed, the bearing bushing and the free wheel gear can adhere to the crankshaft, which would cause friction wear on the sprag clutch.

Coat taper of the sprag clutch housing thinly with LOCTITE 603 and fit on crankshaft. As you do so, turn the free wheel gear so that the sprag lobes (16) can be aligned.

◆ NOTE: When turned to the left, looking towards the magneto side of the engine, the free wheel gear (6) must engage in the crankshaft, and when turned to the right, it must move freely!

See Fig. 72-14.

d05737

Secure degreased hex. nut M34x1.5 with LOCTITE 603 and tighten to 150 Nm (110.6 ft.lb).

◆ NOTE: Hex. nut has lefthanded thread!

■ CAUTION : Check axial clearance of free wheel gear, see Fig. 72-10 and dimension (ES10) in 72-00-00 sec. 4.

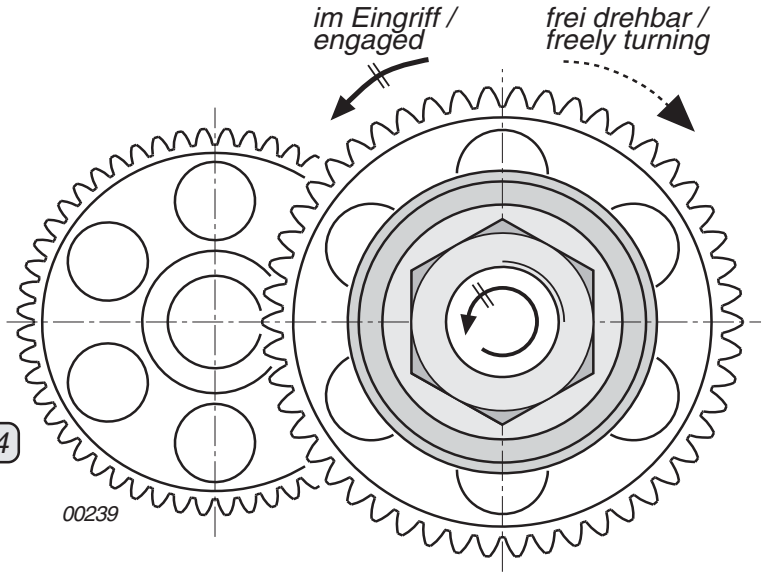

Fig. 72-14

Fig. 72-15

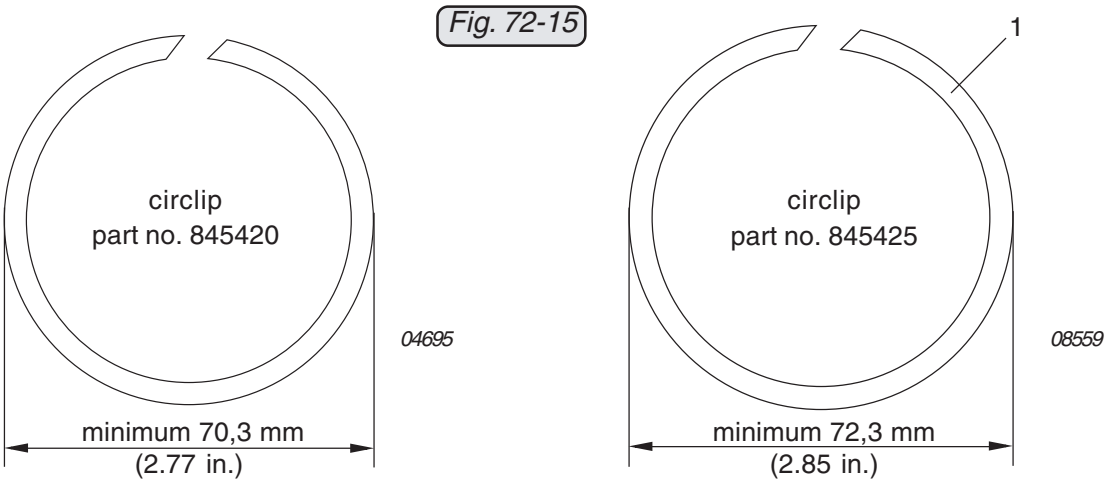

d05737

3.7) Reduction gear for electric starter

See Fig. 72-16.

Place thrust washer (1) 12.5/21.5/1 on the crankcase. Place intermediate gear (2) in position, oil intermediate gear shaft (3) and push into position. Place thrust washer (4) 12.5/21.5/1 on top.

Check the geartooth system of the intermediate gear (5). If the geartooth system is deformed, the intermediate gear must be replaced.

◆ NOTE: If the teeth of the intermediate gear are deformed, a noise will be produced when the engine is started.

■ CAUTION : It is important to ensure that both thrust washer are correctly positioned on the shaft.

Fig. 72-16

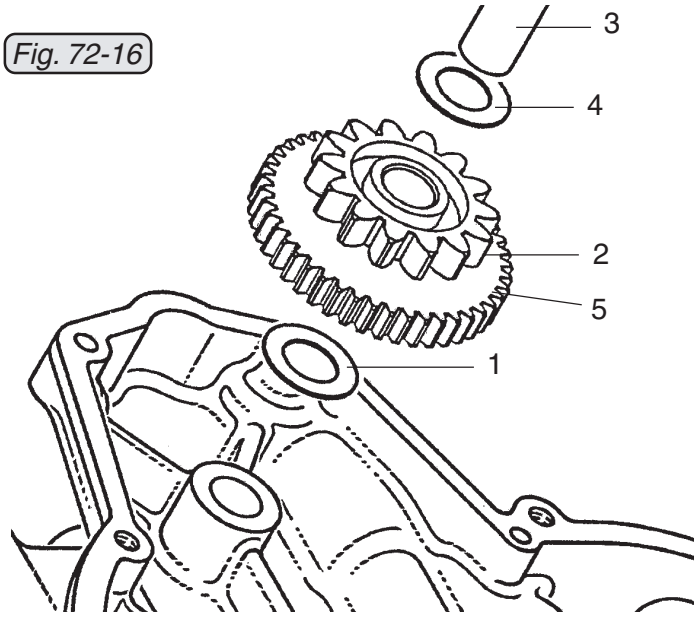

00240

d05737

3.8) Rev counter drive

See Figs. 72-17, 72-18 and 72-19.

The optional mechanical rev counter (1) is driven via the worm gear pressed into the camshaft.

◆ NOTE: On older engine versions without a mechanical rev counter, a cover plate is fitted in place of the rev counter housing. The engine can be retrofitted with a rev counter drive by installation of the drive shaft. See Fig. 72-18.

◆ NOTE: On new engine versions, the ignition cover must also be replaced and the worm gear (9) pressed into the camshaft using special tool, part no. 877190.

Remove allen screw M5x16 (2) and the lock washer, and pull the rev counter housing (3) along with the O-ring (4) and the rev counter shaft (5) out of the ignition housing (see 72-00-00 sec. 3.4).

Gear-tooth system (6) and square end (7) of the rev counter shaft must be inspected for damage. If there is oil leakage, replace the shaft seal (8) 6x11x3 and O-ring (4). Press new shaft seal fully home in the rev counter housing (3) using punch, part no. 877680.

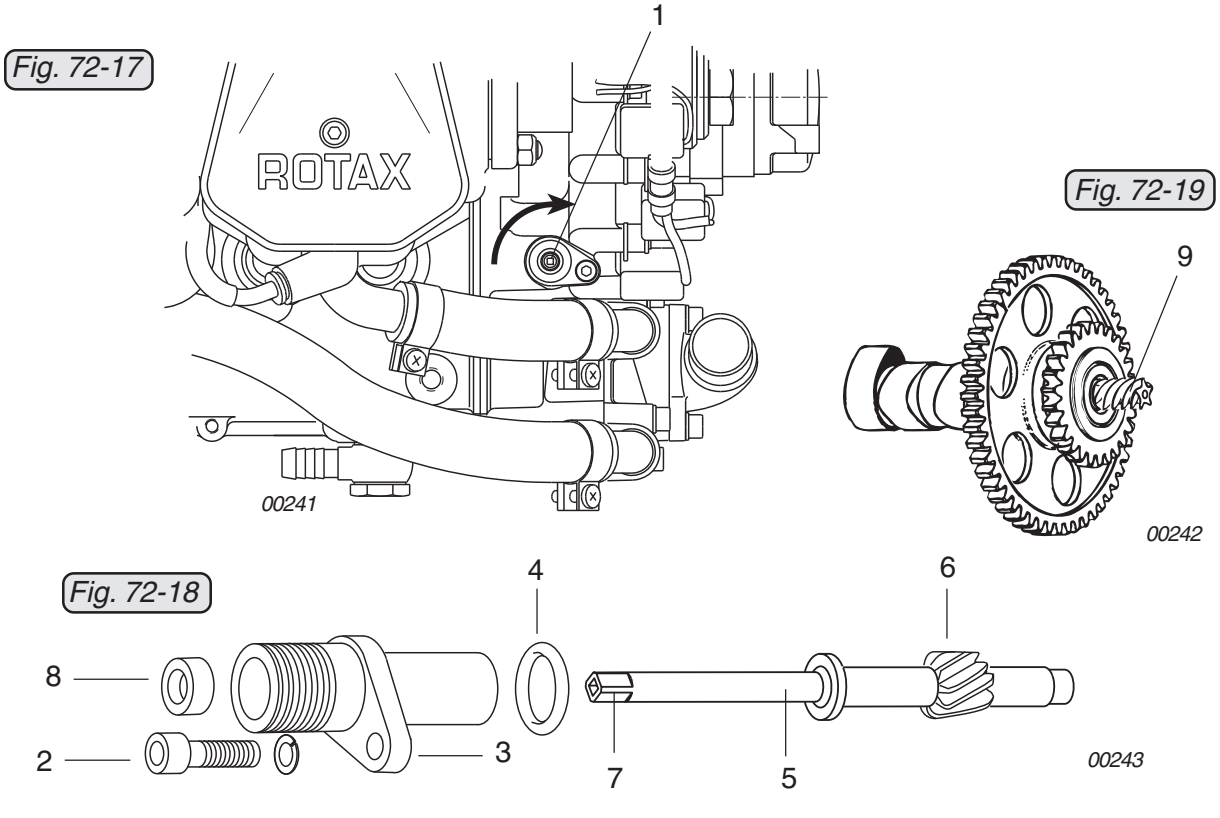

3.9) Propeller gearbox

See Figs. 72-20, 72-20/1 and 72-21.

Before removing the gearbox, it is advisable to check the friction torque. See the corresponding Maintenance Manual (Line Maintenance) for the respective engine type, 912 Series or 914 Series.

■ CAUTION : When removing the gearbox, take care not to damage the bearing seat and the oil seal running surface of the propeller shaft.

Lock crankshaft. See chapter 12-00-00 of the maintenance manual (line maintenance) of the corresponding engine type (912 Series or 914 Series).

Remove 8 allen screws (1) M6 and 2 allen screws (2) M8 together with the lock washers crosswise from the gear cover (3). The gear cover is kept in position by 2 dowel pins. Screw puller (4), part no. 877660, into the two M8 mounting lugs (5) of the gear cover (3). Now the complete gearbox can be pulled off with the slide hammer puller (6) without damaging the ball bearing and the propeller shaft.

◆ NOTE: Alternatively the optimized special tool part no. 877540 can be used to remove the propeller gearbox. See Fig. 72-20/1.

Insert dowel pin 6x20 (7) into the right (8) and left (8) bore of the gearbox housing. Screw hex. screw M6 x 40 into the release mechanism. Center the release mechanism (10) and tighten with hex. screw M10x20 (11). Turn left and right hex. screws (9) evenly to press the gearbox housing off the crankcase.

▲ WARNING: Heated up components - Risk of scalds and burns. Wear safety gloves!

Use a hot air gun to heat up hex. nut M30x1.5 to about 100 to 120 °C (212 to 248 °F).

Release hex. nut M30x1.5 (12) with wrench 41 a/f, part no. 877445 and remove the drive gear with friction washer (13) from the crankshaft. If required, lever drive gear gently off with 2 screwdrivers.

◆ NOTE: Hex. nut has lefthanded thread!

Make sure that both dowel sleeves remain in the crankcase and not in the gearbox housing.

■ CAUTION : The gear set has a continuous 6-digit serial number which is shown on the front side of the drive gear (14) and on the dog gear. The gears are paired as a set and must not be exchanged individually.

d05737

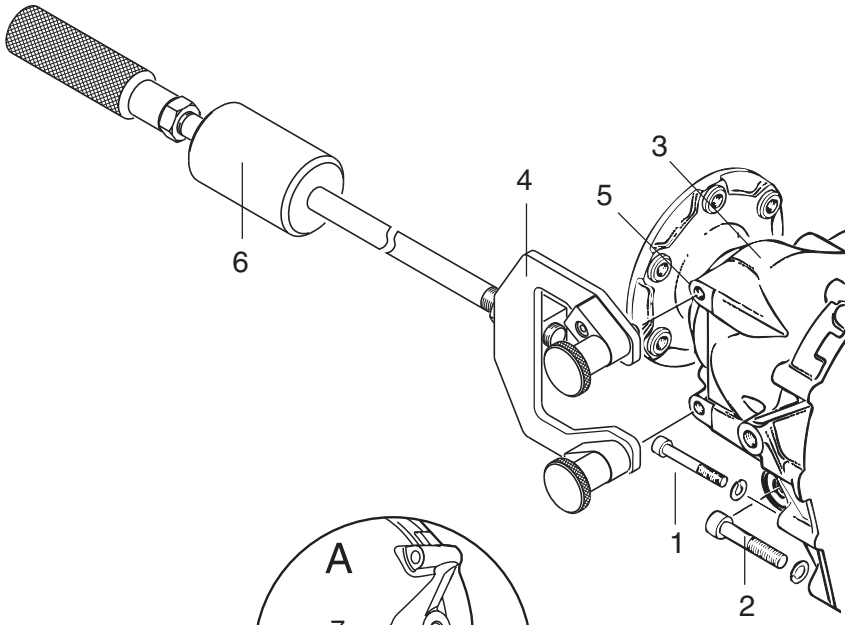

00244

Fig. 72-20

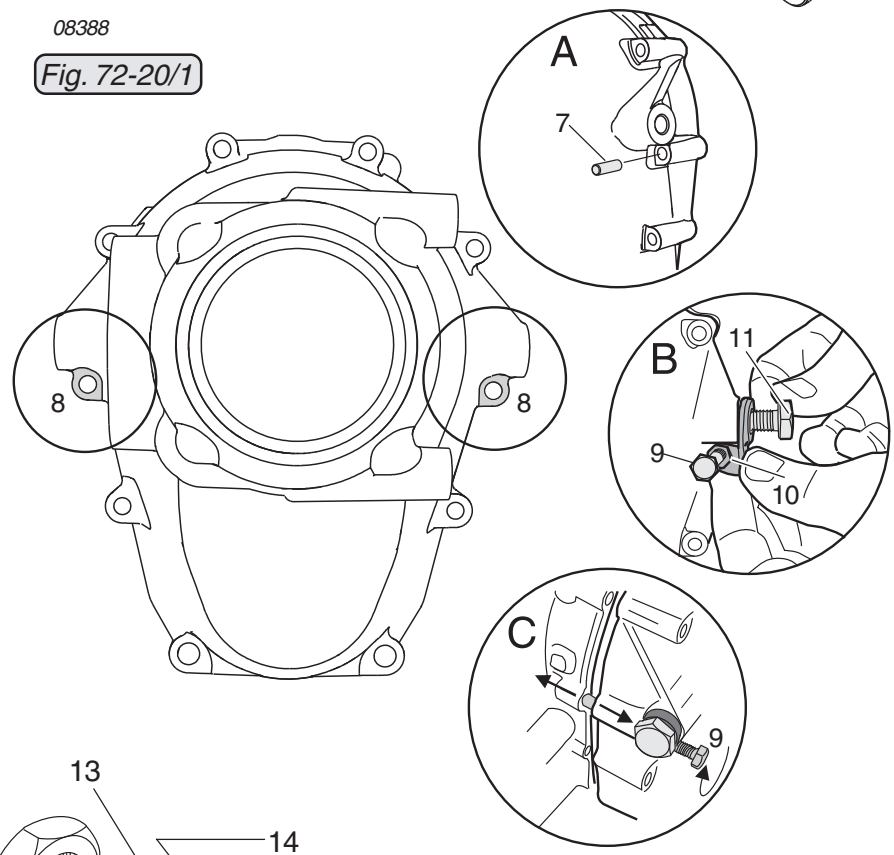

08388

Fig. 72-20/1

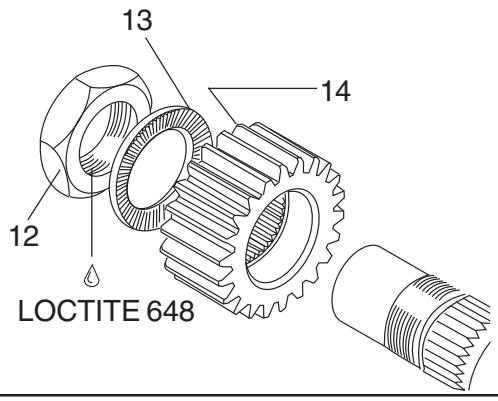

Fig. 72-21

00247

d04231

Propeller shock load - Inspection of crankshaft distortion on installed crankshaft

See Figs. 72-21/1 to 72-21/3

◆ NOTE: The inspection of the crankshaft only makes sense if the shaft runout of the crankshaft AS or MS is less than 0.080 mm (0.0031 inch)

(**A**) Carefully mount holder (1) for protractor (2) part no. 877520 onto the crankshaft .

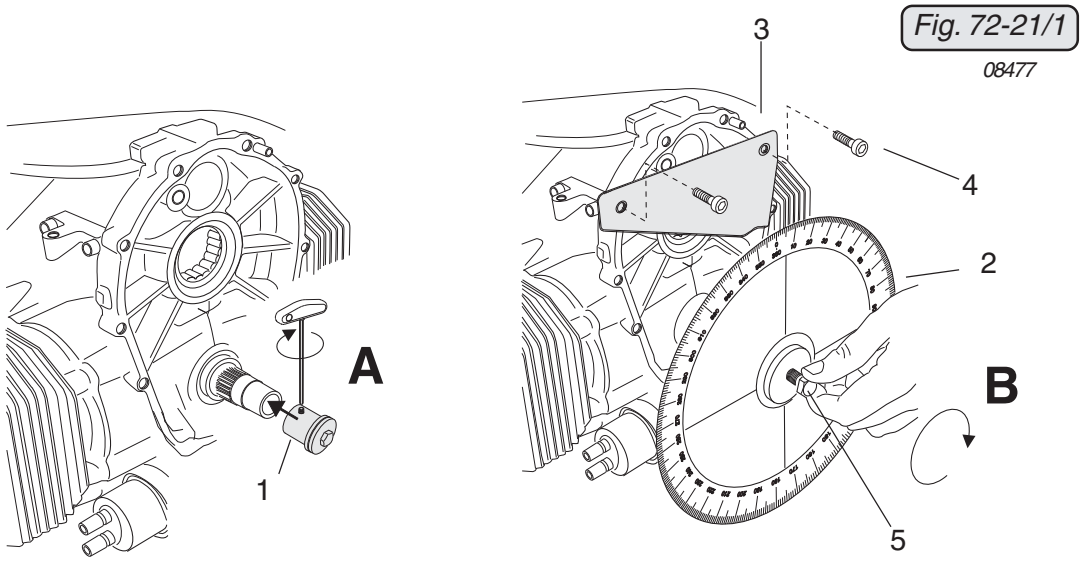

■ CAUTION: Do not damage the crankshaft.

(**B**) Install the metal sheet (3) with allen screw M6x20 (4) between drive sleeve and roller bearing.

◆ NOTE: Make sure that the upper spark plugs have been removed.

(**C**) Starting with cylinder 1 screw in piston stopper (7) completely.

◆ NOTE: On all 4 cylinders the piston stopper has to be installed in the upper spark plug thread.

◆ NOTE: Make sure that the piston stopper has been screwed in completely - so that it is bottomed out in with the spark plug hole.

d04776

Fig. 72-21/2
08582

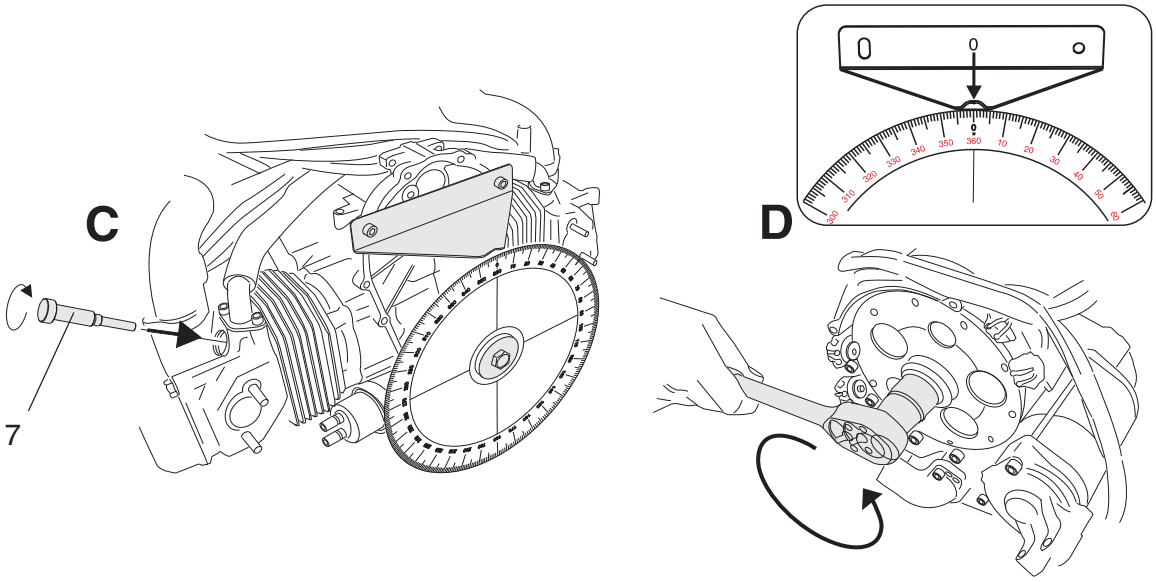

(**D**) Turn the crankshaft carefully in direction of engine rotation until the piston touches the piston stoppers.

◆ NOTE: Allways turn the crankshaft in direction of engine rotation, to move the piston towards the piston stopper.

◆ NOTE: The force applied should be strong enough to break-through possible accumulations on the piston's surface.

(**E**) Turn the protractor (2) on the holder (1) until the pointer of the metal sheet (3) points to 0° then tighten with screw (5).

◆ NOTE: From this point onwards until the measurement procedure has ended the protractor must not be turned on the metal sheet.

◆ NOTE: In this position the piston of cylinder 1 touches the piston stopper.

(**F**) For a smoother removal of the piston stopper turn the piston slightely away from the piston stopper.

(**G**) Now install the piston stopper at cylinder 2 and procede like at cylinder 1.

(**H**) Read the difference to 0° from the protractor.

d04776

■ CAUTION: The value can be positive or negative.

(**I**) For smoother removal of the piston stopper turn the piston slightely away from the piston stopper.

(**J**) Repeat this procedure for cylinder 3. The piston will be stopped at 180°.

(K) Read the difference to 180° from the protractor.

■ CAUTION: The value can be positive or negative.

(**L**) Repeat this procedure for cylinder 4. The piston will be stopped at 180°.

(M) Read the difference to 180° from the protractor.

■ CAUTION: The value can be positive or negative.

■ CAUTION: If a value exceeds the GB20 limit, then the engine needs to be overhauled by a ROTAX-authorised service partner.

■ CAUTION: The deviation of the crank pin (as a whole) must not exceed the GB20 value. For GB20 see also Chapter 4 “wear limits”.

Example showing the results from meassuring a crankshaft, where the GB20 threshold is not exceeded:

Cylinder	deviation
1	0°
2	+ 2°
3	0°
4	+1°

Fig. 72-21/3

08690

d04776

Example showing the results from meassuring a crankshaft, where the GB20 threshold is exceeded:

Cylinder	deviation
1	0°
2	+ 2°
3	0°
4	-1°

Fig. 72-21/4
08691

3.9.1) Removal of roller bearing for - Series 2

See Fig. 72-22.

After the propeller gearbox is removed, the crankcase side propeller shaft bearing and oil seal can be replaced if necessary.

Remove the retaining ring (1) with the circlip pliers. Attach extractor (2) part no. 877615 with 8 allen screws M6x25 to the crankcase. Screw stud (3) M10x45/20, part no. 941180, into the pull-in spindle (4), part no. 877580 and fit hex. nut (5) M24x1.5 onto the pull-in spindle.

For better guidance, place the press-in insert (6), part no. 877592, into the roller bearing (7). Place the pull-in spindle (4) into the extractor (2) and through the crankcase.

On the rear side of the crankcase, push the pullout plate (8), part no. 877560, onto the stud and attach with the hex. nut M10 (9), part no. 242091.

d04776

Keep pull-in spindle in position with the handle lever and turn the hex. nut clockwise until the roller bearing (7) with oil seal (10) is pulled out of the housing. Unscrew hex. nut, remove pullout plate with roller bearing and oil seal and withdraw spindle (11). Unscrew extractor from housing.

■ CAUTION : During this procedure, the oil seal (10) is destroyed and must be replaced.

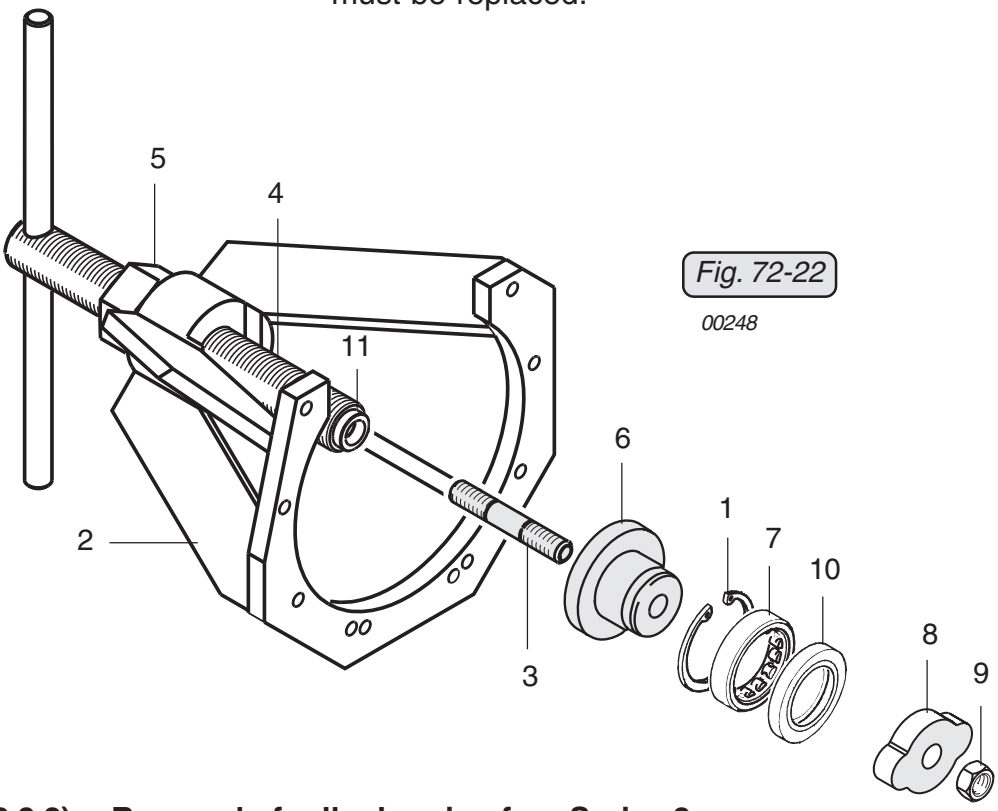

Fig. 72-22

00248

3.9.2) Removal of roller bearing for - Series 3

See Fig. 72-23.

After the propeller gearbox is removed, the crankcase side propeller shaft bearing and oil inlet flange can be replaced if necessary.

Before disassembly, the governor flange must be removed. On configuration 912 Series 3 with hydraulic governor, the procedure for pressing out varies from that for Series 2 and 4. On Series 3, the roller bearing is pressed out together with the oil inlet flange.

Remove the retaining ring (1) with circlip pliers. Fit puller cap (2), part no. 876489, and push hex. screw (3) through the cap, roller bearing (4) and oil inlet flange (5). Fit washer (6) and nut (7) on the back end. By turning the hex. screw clockwise, the roller bearing is pulled out together with the oil inlet flange. Take out O-ring (8) and both O-rings (9).

d04776

3.9.3) Removal of roller bearing for - Series 4

See Fig. 72-24.

After the propeller gearbox is removed, the crankcase side propeller shaft bearing can be replaced if necessary.

For the extracting procedure it is necessary to drill a bore (2) of at least 6.2 mm dia., (1/4") into the center of the oil inlet cover (1).

■ CAUTION : The oil inlet cover is thus rendered useless and must be replaced before installation!

■ CAUTION : Grease the grooves of the drill slightly to ensure that the majority of the metal chips adhere to the drill. Remove metal chips carefully after drilling.

The roller bearing is pulled out together with the oil inlet cover. Remove the retaining ring (3) with circlip pliers. On the gearbox side, fit puller cap (4), part no. 876489, and push hex. screw (5) through the cap, roller bearing (6) and the hole drilled in the oil inlet cover (1). Fit the pullout plate (7) with the nut (9) and washer (8) on the back end. By turning the hex. screw clockwise, the roller bearing is pulled out together with the oil inlet cover. Remove the O-ring (10).

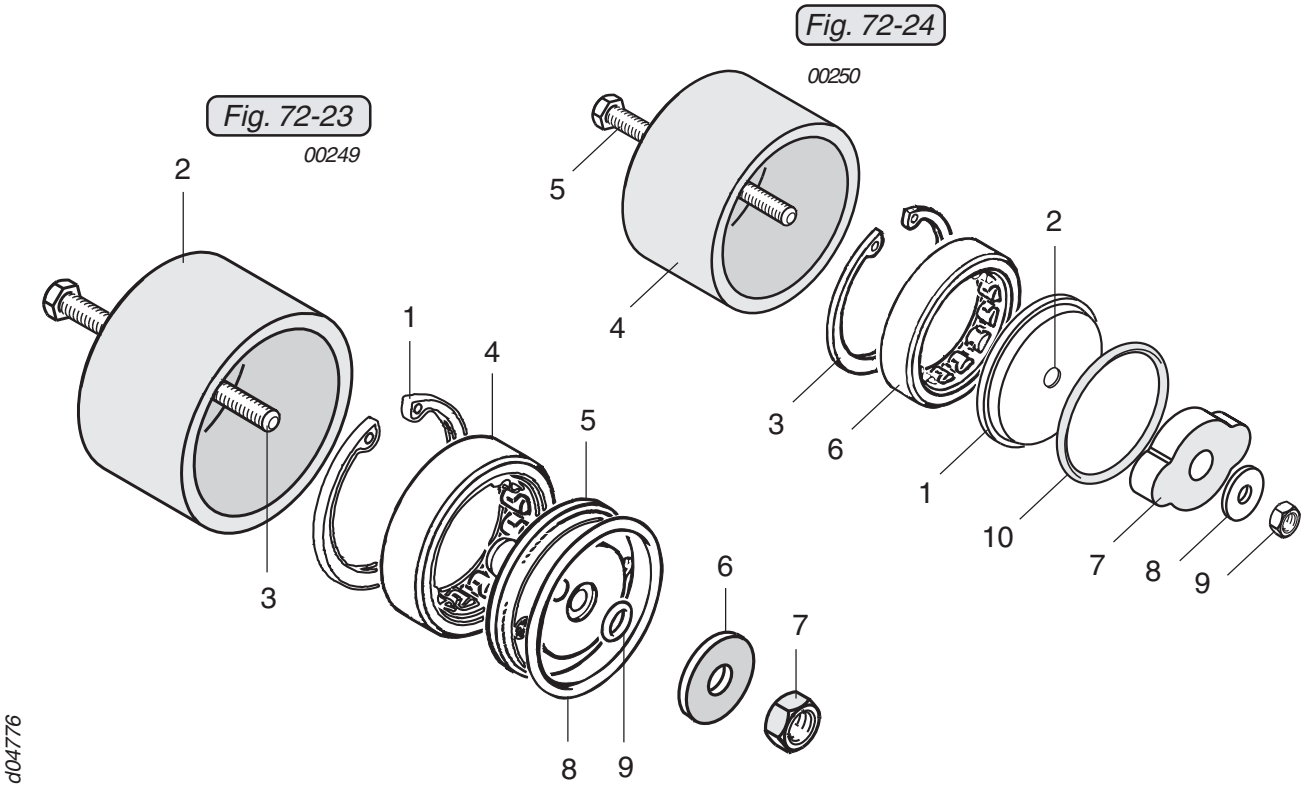

3.9.4) Propeller gearbox disassembly

See Figs. 72-25, 72-26 and 72-27.

■ CAUTION : Only push the dog gear down until it is possible to remove the two ring halves, otherwise the gearbox housing could be destroyed. The gear cover should be rotated back and forth during this step!

Place the complete gearbox in a suitable fixture (1) and press down the gear wheel with the mounting yoke (2), part no. 876885, until the ring halves (3) can be removed, see 00-00-00 section 10.4

Now relieve the pressure on the gear by turning spindle (4) back and remove the mounting yoke and the gearbox from the fixture. Remove the drive gear (5), the thrust washer and the dog gear. Force bearing bushing (6) apart with circlip pliers and withdraw from the propeller shaft.

■ CAUTION: Do not overstress bearing bushing (6), as otherwise it will become unusable.

Remove the complete overload clutch (7) or dog hub (13), disc springs (8) 80x35x3, step collar (9), 6 mm (0.236 in.) distance sleeve (17), compensating shim (10), eccenter (11) (for fuel pump on the ROTAX 912 Series, of no significance on the 914 Series) and 8 mm (0.31in.) distance sleeve (12).

■ CAUTION: The overload clutch is fitted **in serial production on** all certified aircraft engines and on all noncertified aircraft engines of configuration 3. All other engine versions are equipped with a dog hub, but available with an optional overload clutch or can be retrofitted to accommodate one.

d04776

Fig. 72-25

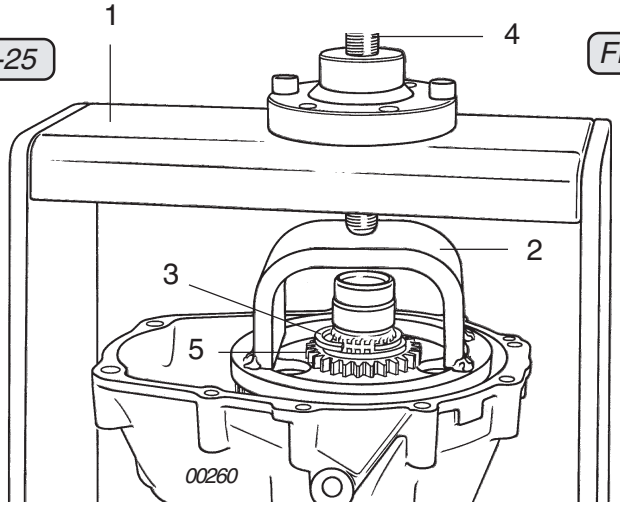

Fig. 72-26

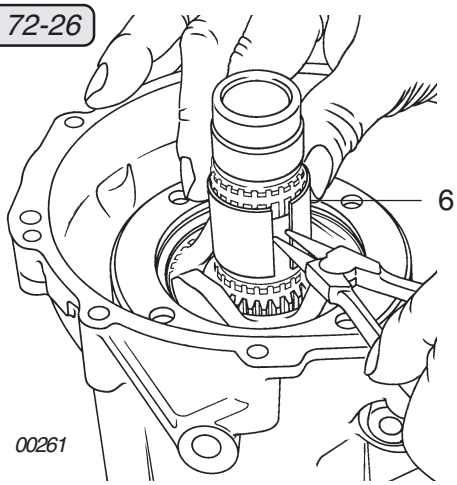

Fig. 72-27

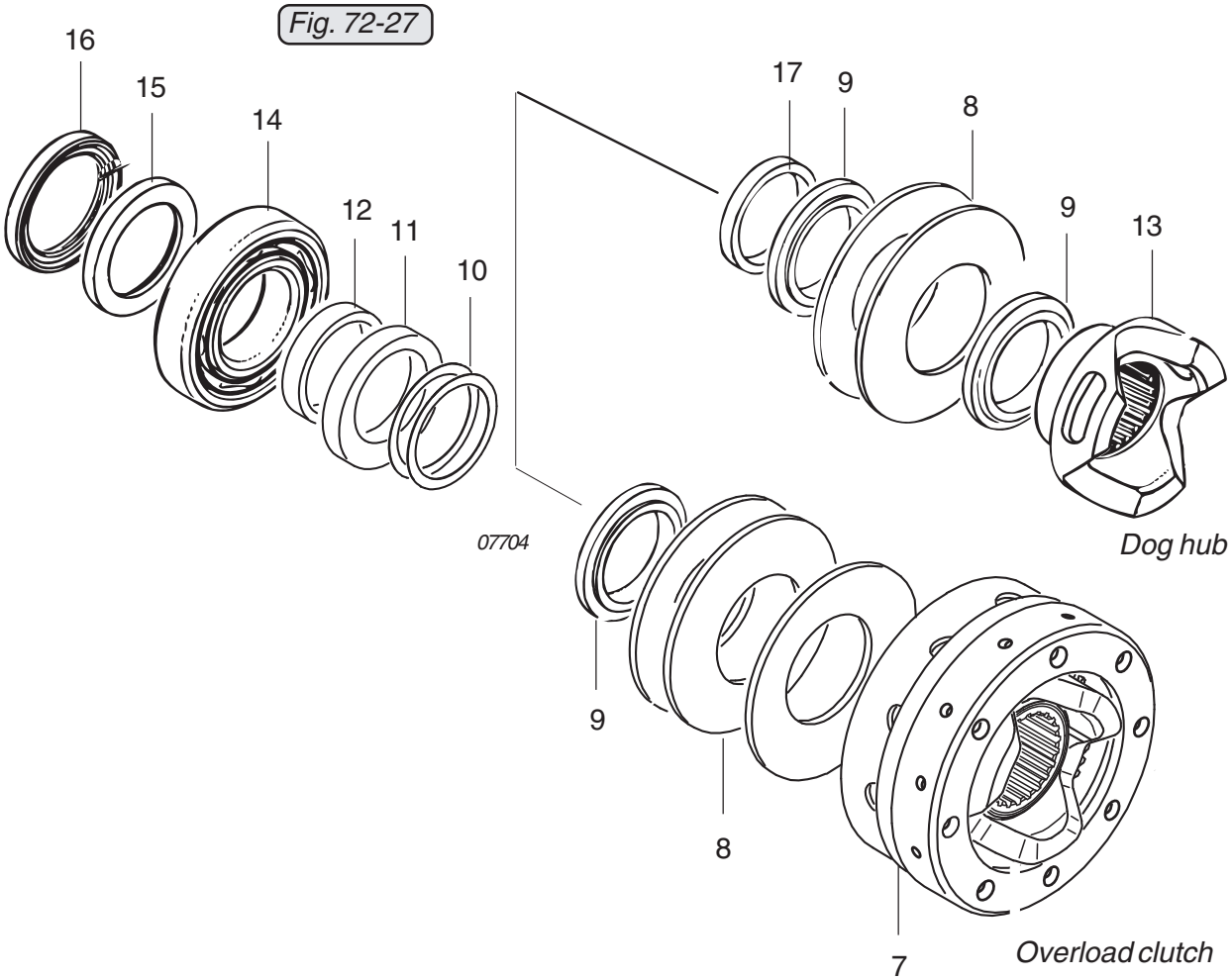

3.9.5) Propeller shaft removal

See Figs. 72-28 and 72-29.

Place gearbox housing on a suitable surface and press out the propeller shaft with a hand press. Alternatively, the extractor (1), part no. 877615, can be used to press out the propeller shaft.

Fit the extractor onto the gearbox housing (3) with 6 x M6 screws (2) and place press-out insert (4), part no. 877605 (for engine configuration 2), or press-out insert (5), part no. 877600, (for configurations 3 and 4) on the end (6) of the propeller shaft (7).

Insert pull-in spindle (8) into the support (9) of the extractor (1) and screw hex. nut (10) M24x1.5 onto the spindle (8) from the inside. Keep nut in position with a wrench. By turning the spindle clockwise, the propeller shaft is pressed out of the gearbox housing.

■ CAUTION : The protection piece (press-out insert (4) - part no. 877605 or press-out insert - part no. 877600) must be used without fail, as otherwise the machined inner diameter of propeller shaft would be damaged. If the propeller shaft is removed, the ball bearing (11) must be replaced!

To remove the ball bearing (11), unscrew the 4 hex. screws (12) M7x16 with the washers (13) from the gearbox housing (3).

■ CAUTION : During this procedure, the shaft seal (14) will be damaged and must be replaced.

Heat the gearbox housing to 80 to 100 °C (176 to 212 °F) and knock the ball bearing (11) out, together with the oil seal (14) and the radius ring (15), using a suitable punch and from the outside towards the inside.

d04776

Fig. 72-28

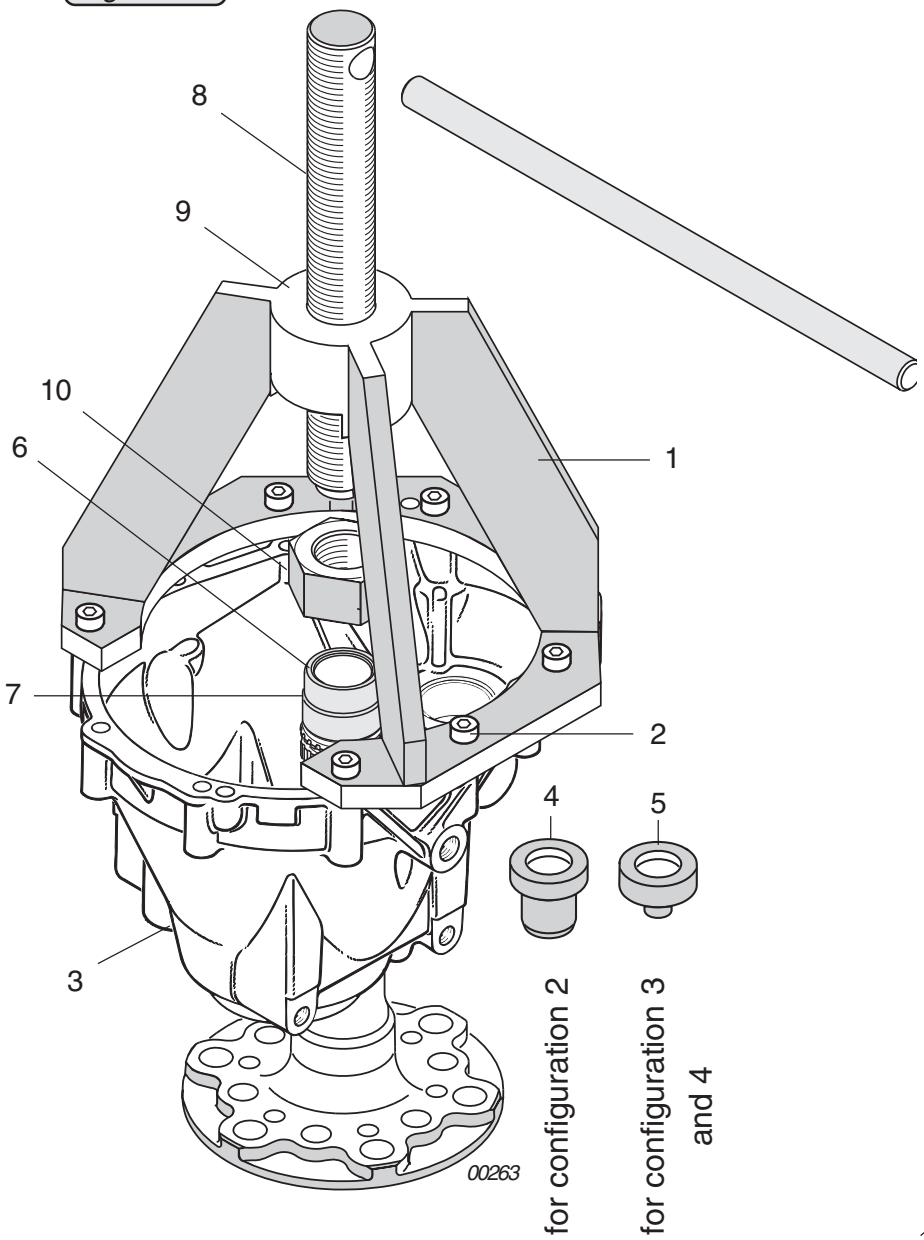

Fig. 72-29

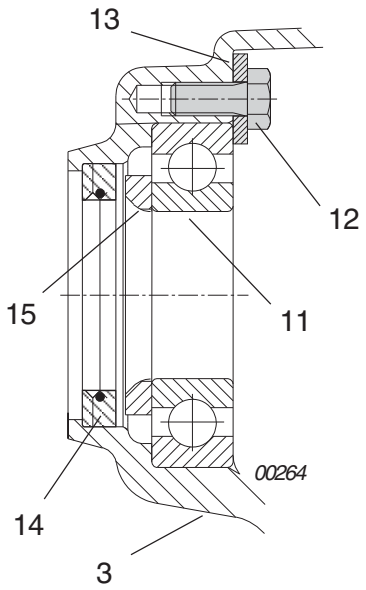

d02622

3.9.6) Vacuum pump drive removal

See Fig. 72-30.

The vacuum pump is driven via the drive gear (1) fitted on the propeller shaft.

Check the ball bearing (2) and the needle sleeve (3). Check the gear-tooth system of drive gear (1), the vacuum pump gear (4), the drive sleeve (5) and the drive shaft of the vacuum pump.

If the ball bearing or needle sleeve are to be replaced, remove the vacuum pump as follows:

Lock the drive sleeve (5) with the holder, part no. 242660, remove the allen screw (6) M8x14 and remove the vacuum pump gear (4) with the drive sleeve (5).

Remove the countersunk screw (7) M5x12 with the washer (8) for ball bearing fixation.

Lift out the oil seal (9) and press out the needle sleeve and ball bearing with a suitable step punch towards the propeller flange. Clean and inspect bearing seat.

◆ NOTE: During this procedure, the needle sleeve (3), the oil seal (9) and the ball bearing (2) are damaged and must be replaced.

■ CAUTION : The attachment screw (6) M8 of the vacuum pump gear for hydraulic governor drive is **16 mm long** (0.63 in.) and with a low profile screw head. For vacuum pump drive, however, it is only **14 mm long** (0.55 in.) with standard screw head.

Fig. 72-30

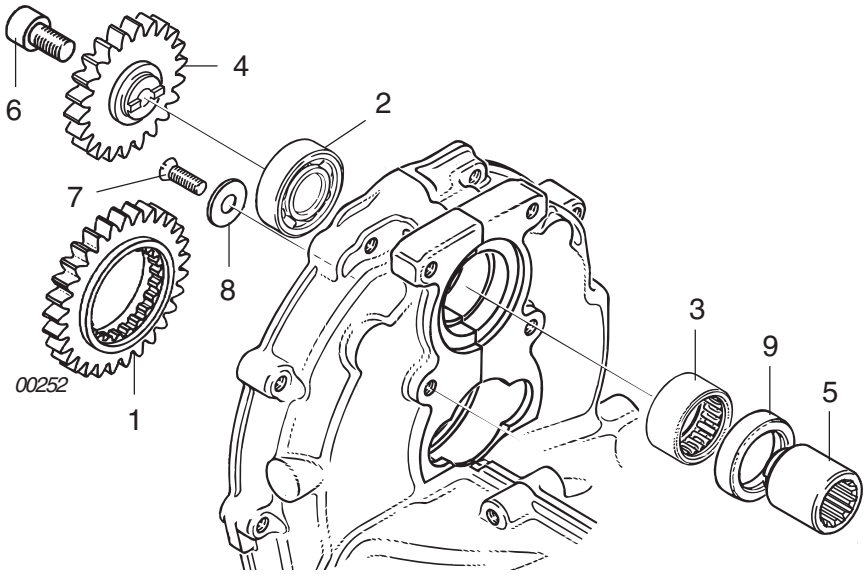

d04776

3.9.7) Propeller governor drive removal

See Figs. 72-31 and 72-32.

Remove banjo bolts (1) M10x1 and both sealing rings (2) from the governor flange (3) and the oil pump housing and remove the oil line. Remove the 4 allen screws (4) M6x20 and 2 allen screws (5) M6x16 for oil inlet flange fixation. Remove governor flange with O-ring and distance sleeve (item 9 of fig. 72-34) behind.

Fig. 72-31

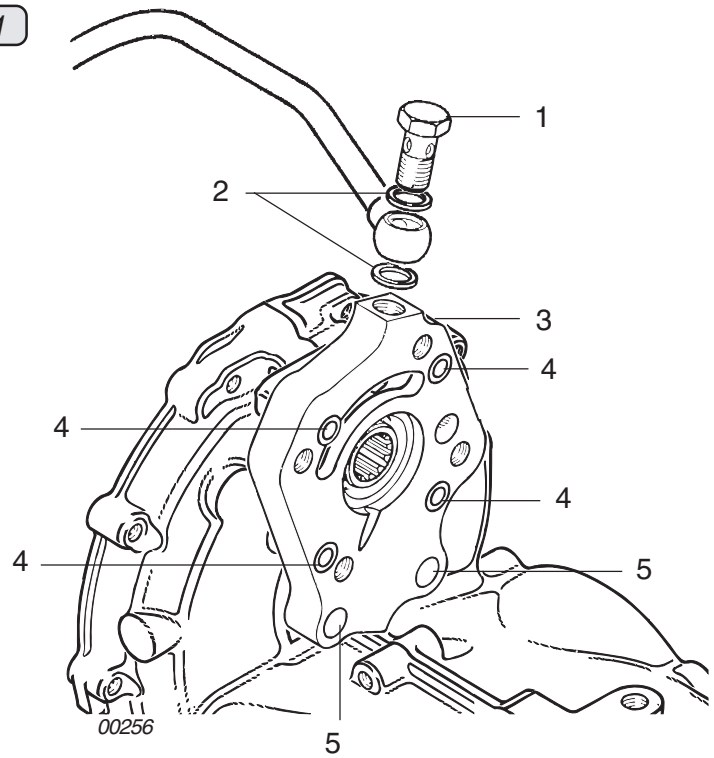

After removal of propeller gearbox the drive can be disassembled. Fix the drive sleeve (9) with holder, part no. 242660. Unscrew allen screw M8x16 (7) and remove the governor gear (8) with the drive sleeve (9). Remove the countersunk screw (10) M5x12 with the washer for ball bearing fixation.

Press out the needle sleeve (11) and the ball bearing (12) with a suitable step punch towards the gearbox.

◆ NOTE: Needle sleeve and ball bearing will be damaged by this procedure and must be replaced.

d04776

Fig. 72-32

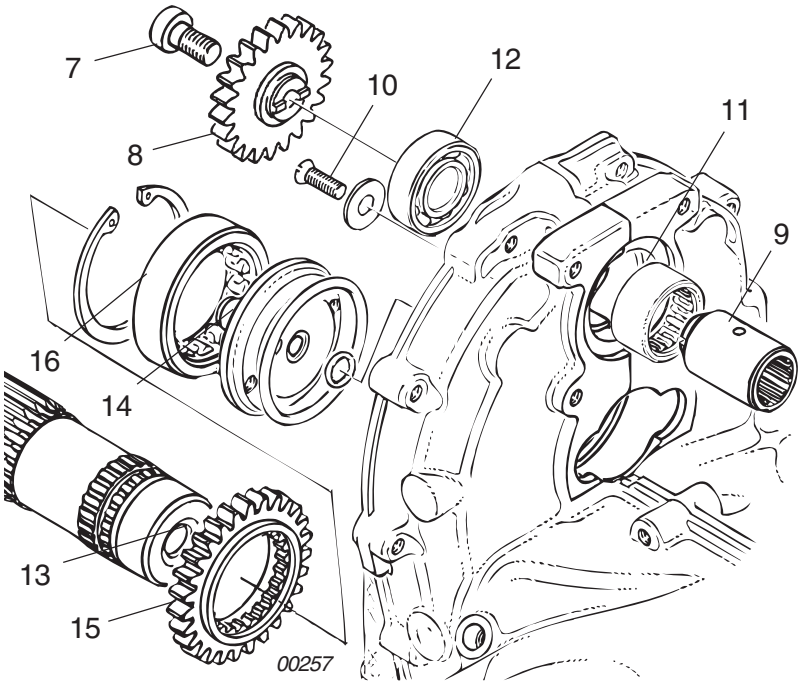

Measure the inner diameter (13) of the propeller shaft and the bearing neck (14) of the oil inlet flange (GB05 and GB06). Any wear will probably appear as a flat area on the journal. Check the gear-tooth system of the drive gear (15) and the vacuum pump gear (8). Carry out a visual inspection of the ball bearing (12) and the cylindrical roller bearing (16).

■ CAUTION : The attachment screw (7) M8 of the vacuum pump gear for hydraulic governor drive is **16 mm** long (0.63 in.) and with a low profile screw head. For vacuum pump drive, however, it is only **14 mm** long (0.55 in.) with standard screw head.

Clean parts carefully and remove sealant residues. Check the sealing surface and all oil bores in the governor flange (3) for free passage. Carry out a visual inspection of the needle sleeve (11) and the gear-tooth system and bearing surface of the drive sleeve (9). Ensure that the connecting face for the oil pressure line is clean.

The governor must be sent to the manufacturer if any repair work becomes necessary.

d04776

3.9.8) Propeller governor drive installation

See Figs. 72-32, 72-33 and 72-34.

■ CAUTION : The oil inlet flange must be properly aligned and the O-ring must not be squeezed.

Install needle sleeve and ball bearing as described in 72-00-00 sec. 3.9.9. Grease new O-ring (1) and insert it together with the oil inlet flange (2) into the crankcase. Take care that both M6 threads are horizontal and the oil gallery is in a position to let the oil pass. For better positioning, temporarily attach governor flange with 2 allen screws M6x20 (12) and oil inlet flange with 2 allen screws M6x16 (13). Do not torque screw, only tighten enough to keep flange aligned.

Screw extractor (3), part no. 877615, onto the crankcase, place press-in insert (4), part no. 877590, into roller bearing (5), place on the centering (6) and press it fully home into the crankcase with the spindle (7). Fit circlip in groove with its sharp edge towards the outside.

Align drive gear lip (8) Fig. 72-32 into drive sleeve notch (9) Fig. 72-32 with holder, part no. 242660. Apply LOCTITE 2701 to the allen screw M8x16 and tighten.

Fit the governor flange (8) again. Fit distance sleeve (9) and new O-ring (10) 32x4 into the crankcase. Place one O-ring (11) 7x2 into the oil inlet flange and one into the governor flange and keep them in position with some grease. Fit the governor flange and attach it to the crankcase with 4 allen screws (12) M6x20 and to the oil inlet flange with 2 allen screws (13) M6x16.

Fig. 72-33

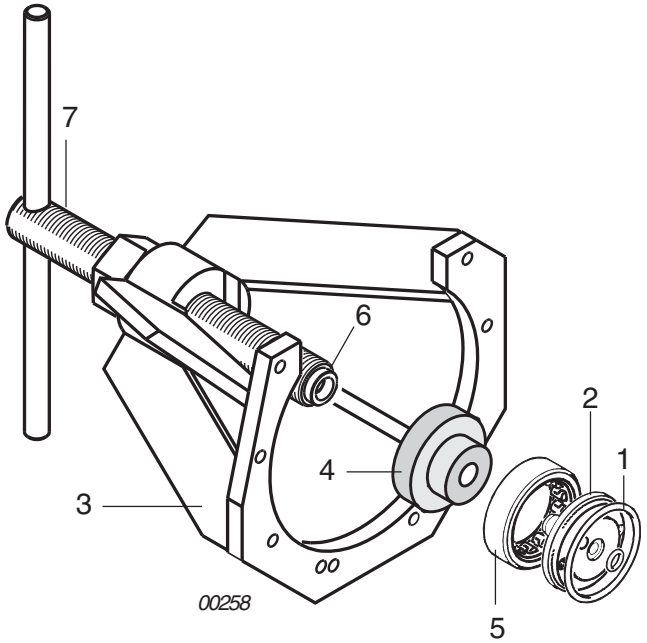

d04776

■ CAUTION : Longer screws will damage the oil inlet flange.

◆ NOTE: Tightening torque 10 Nm (90 in.lb). The allen screws (12) and (13) are secured with LOCTITE 243.

Fit the governor (14) and the new gasket (15). Take care that the gear-tooth system engages.

Depending on governor type different screws and nuts are needed. See SB-912-052 and SB-914-035, “Installation / Use of governors“, latest issue.

Fit the pressure oil line (18) to the governor flange and the oil pump housing and secure with a clamp. The screw plugs (19) and (20) normally remain closed. A pressure gauge for governor pressure inspection can be connected at position (19) if necessary. The maximum governor pressure is between 21.5 bar (312 p.s.i) and 24.5 bar (355 p.s.i), depending on governor type. The governor starts regulating at 3400 to 4150 rpm.

Malfunction of the propeller governing may be caused by the following:

— incorrect adjustment of governor actuation

— malfunction of propeller governor

— insufficient oil pressure, oil pressure fluctuations

— propeller pitch control.

d05737

Fig. 72-34

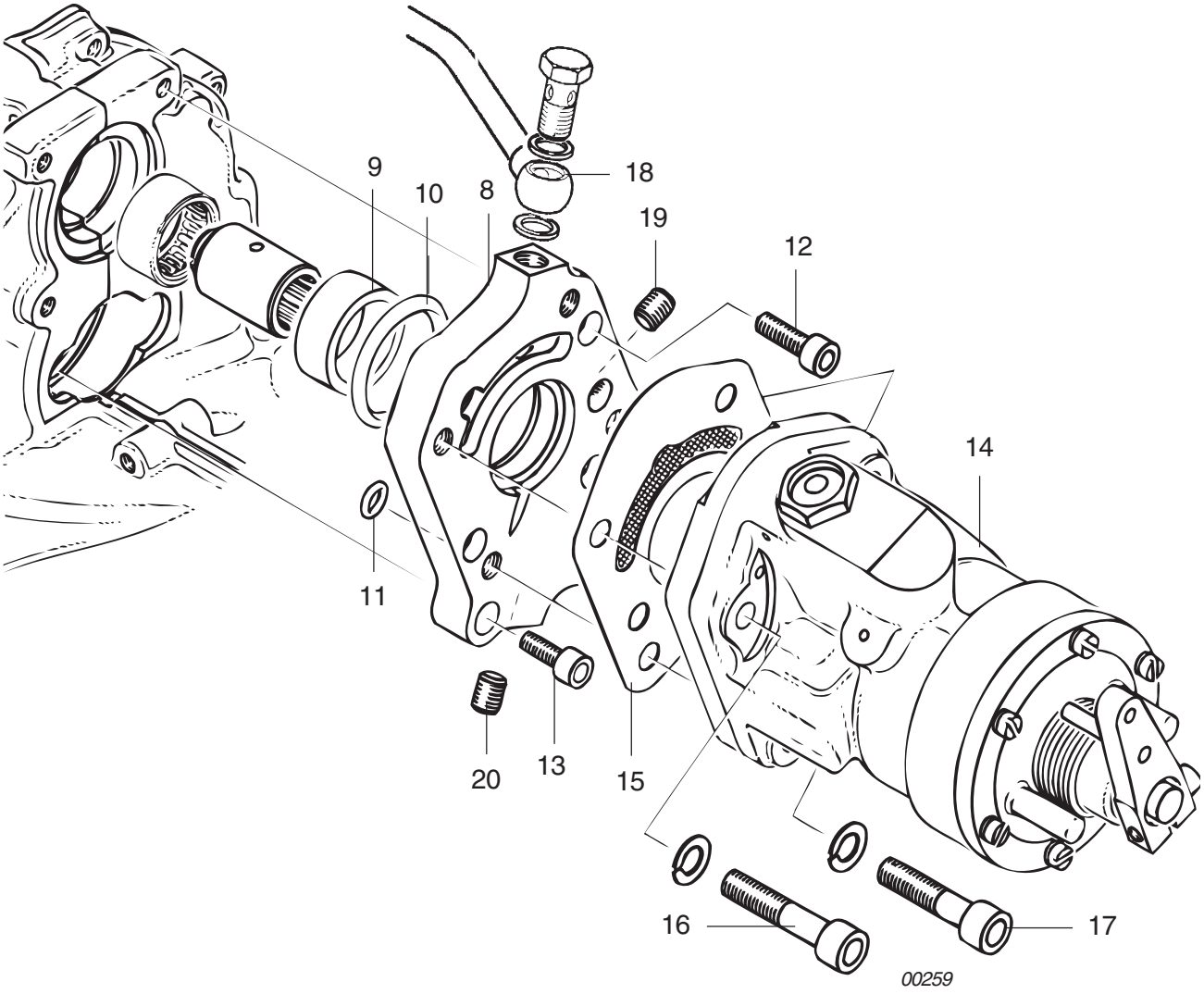

d02622

3.9.9) Vacuum pump drive installation

See Figs. 72-34, 72-35 and 72-36.

Lubricate new needle sleeve (3). Position puller cap (10), part no. 876489, on vaccum pump side, place press-in insert, part no. 877579, (11) onto the needle sleeve and fix with the hex. nut (12). Turning the hex. screw (13) clockwise presses the needle sleeve in completely.

The ball bearing is pressed in with the same procedure, but the puller cap (10), part no. 876489, is fitted on the pump flange side and the press-in insert (14), part no. 877595, is used.

Then the new oil seal (9) in pressed in using insertion jig, part no. 877276, and greased. Apply LOCTITE 243 to the sunk screw (7) M5x12 and the washer (8) for ball bearing fixation and tighten.

■ CAUTION : The length of allen screw (6) M8x14 must never be altered, as otherwise the screw will collide with the drive shaft of the vacuum pump.

Fit vacuum pump gear (4) and fix drive sleeve (5) with holder, part no. 242660. Apply LOCTITE 648 to allen screw (6) M8x14 and turn it in.

Fig. 72-35

00253

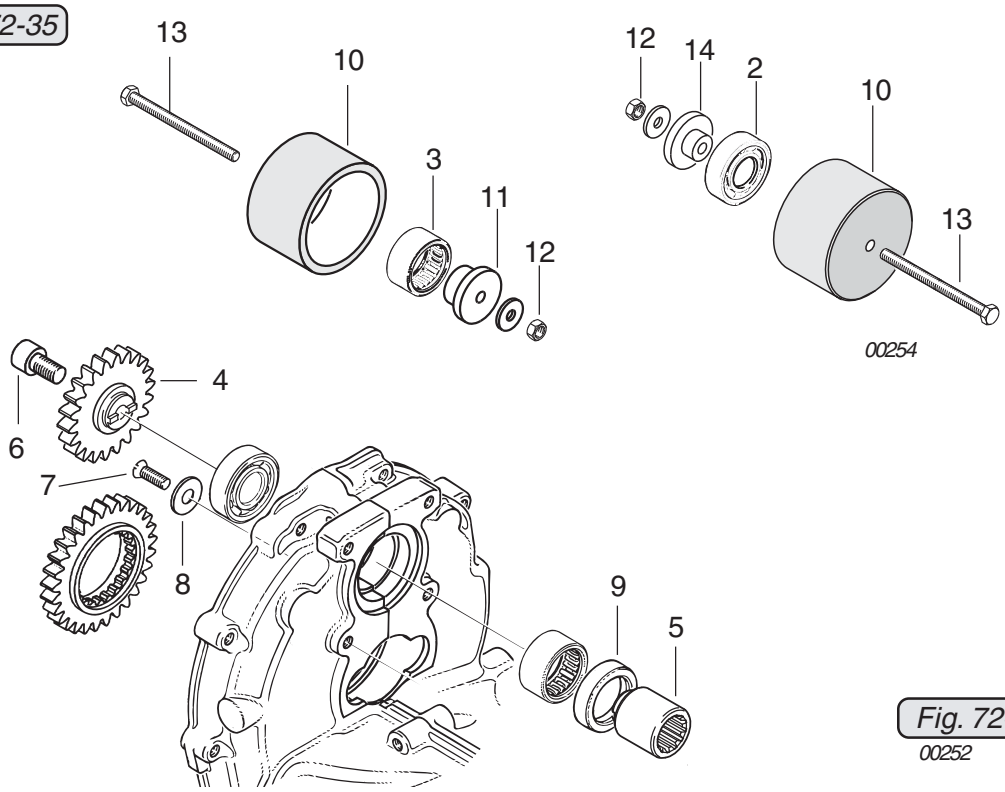

Fig. 72-36

00252

d05737

3.9.10) Gearbox components inspection

See Figs. 72-37, 72-38, 72-39, 72-40, 72-41 and 72-42.

Clean disassembled gearbox with suitable cleaning agents and check the following parts:

— Check that the bearing bushing (1) for crankshaft support bearing in the gear cover fits tightly and measure dimension (GB01). See 72-00-00 sec. 4.

— Measure both bearing seats (2) and (3) on the propeller shaft. See dimension (GB02) and dimension (GB03). Check oil seal running surface (4) and (5). Roll propeller shaft and check for run out. Check the run out of the propeller flange, see dimension (GB04). See 72-00-00 sec. 4.

Fig. 72-37

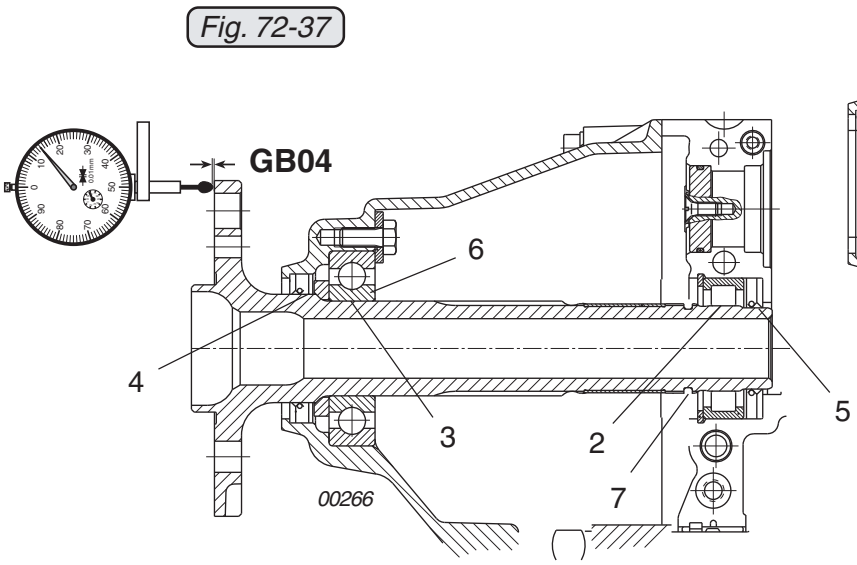

Fig. 72-38

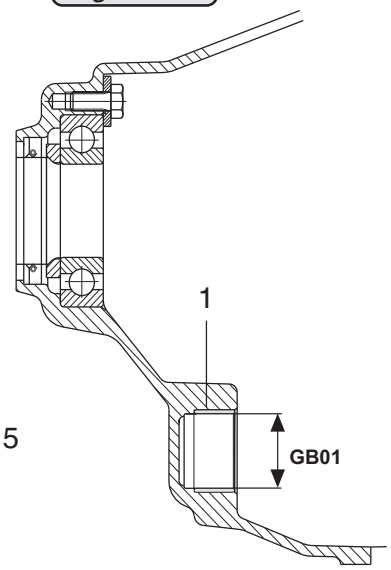

■ CAUTION: The entire propeller shaft with attachment bores must be free of corrosion, and there must be no fretting corrosion at bearing points ((2) and (3)).

d02622

Treatment of corrosion damage and surface damage to the propeller flange

The flange of the propeller shaft is subject to corrosion. After wrapping the propeller shaft (2) in plastic tape or covering it with plastic tubing, the propeller flange can be treated with an abrasive.

■ CAUTION: Before applying the protective coating, carefully cover the flange face (3), the attachment bores and the propeller shaft in this area (2).

To prevent corrosion damage, the back of the propeller flange should be coated with a corrosioninhibiting agent.

Where there is greater corrosion damage and the material has been affected, the propeller shaft must be replaced.

When carrying out any of these steps, the manufacturers instructions must be observed.

— The ball bearing (6) must be an interference fit on its outer race in the gearbox housing and on its inner race on the propeller shaft. Check groove (7) for the retaining rings and the gear-tooth system (8) for wear or damage.

On configuration 3, the inner diameter (9) of the propeller shaft must be checked in the area of the oil inlet flange (10), dimension (GB05/GB06). See 72-00-00 sec. 4.

◆ NOTE: The dimension GB05 or GB06 by itself is not as important as the radial clearance between GB05/GB06.

Inspect the propeller shaft for cracks. See 00-00-00 sec.10.4. Register the results of the magnetic particle inspection in the respective form sheet. See 72-00-00 sec. 5.

Fig. 72-39

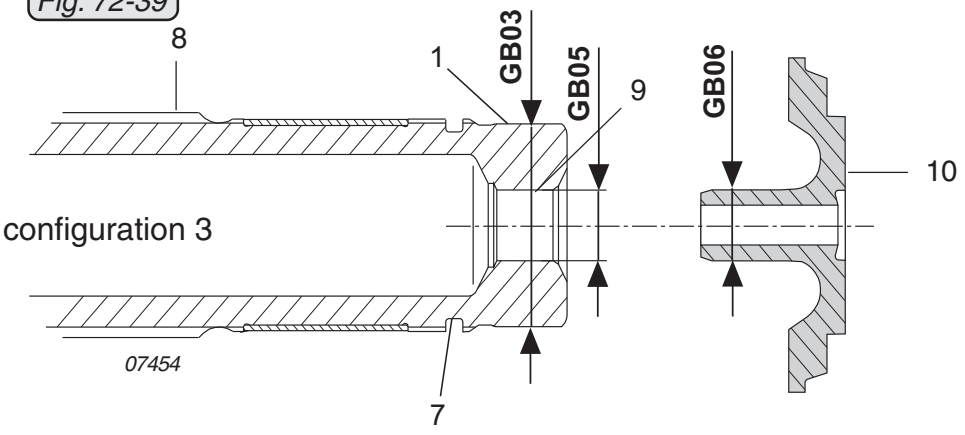

d04776

— Carry out a visual inspection of the dog gear (11) and the dog hub (12) to establish whether pitting is visible on the gear-tooth system and/or the sliding ramps (GB08) of the dogs. Ensure that the ramp tops of the dog gear are clearing the ramp valleys of the dog hub. Check the gap between the ramp top and the ramp valley, see dimension (GB07). See 72-00-00 sec. 4. Light to medium traces of wear and pitting on the dogs are permissible.

Fig. 72-40

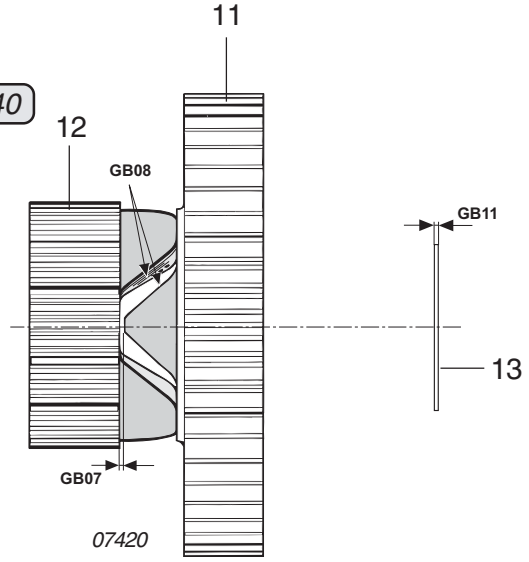

— Check the gear-tooth system (14) of the gear set.

— Check the eccenter for the fuel pump and the fuel pump tappet for wear, see 72-00-00 sec. 3.9.4 and 73-00-00 sec. 3.4.8

— Check the step collar for wear in the area of the disc spring support, see 72-00-00 sec. 3.9.4.

— Measure the thickness of the plastic thrust washer (13) between the dog gear (11) and the drive gear (15), see dimension (GB11). See 72-00-00 sec. 4.

— Check the hardened steel dog gear bush (16) for wear.

d02622

Fig. 72-41

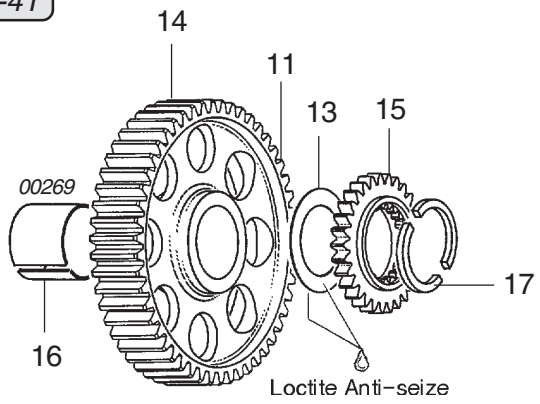

— If there is visible wear to the disc springs (18) in the contact area (19), they must be replaced. Check dimension (GB13) of the uncompressed disc spring.
See 72-00-00 sec. 4.

Fig. 72-42

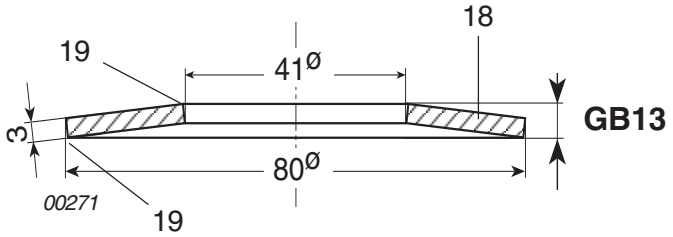

d04776

3.9.11) Toothed shaft profiles inspection

See Fig. 72-43.

There are two important toothed shaft connections in the gearbox.

- **crankshaft to drive gear**
- **propeller shaft to clutch hub of the overload clutch**

  Carry out a visual inspection of all toothed shaft profiles for damage and wear.

  To check the toothed shaft profiles, the tooth width at the head of the respective inner and outer gear-tooth system must be measured. The lowest value is decisive in each case.

See 72-00-00 sec. 4.

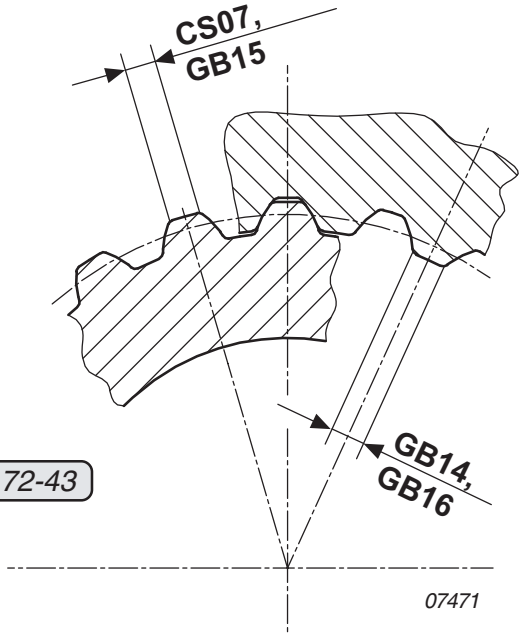

Fig. 72-43

d02622

3.9.12) Gear set inspection

The gear set is inspected to detect any damage to the gear-tooth system.

◆ NOTE: The gear set can be inspected with the gearbox installed by using an endoscope with flexible shaft. This must be done in such a way that the condition of the gear flanks can be **precisely evaluated** - which requires experience.

■ CAUTION: Inspect all gear tooth contact surface for signs of damage and pitting.

Gear set pitting can cause high frequency vibration. This vibration may result in severe problems. As it is transmitted throughout the engine and its attached components:

– fuel pump damage

– gearbox wear (splines and contact area)

– external alternator wear

– exhaust system wear

– crankcase mating surfaces

◆ NOTE: This vibration can be detected with dynamic propeller analysis equipment. Normal vibration level for the engine is approx 0.5 to 1.0 inch per seconds or ask the aircraft manufacturer for the figures for the particular installation.

Pitting can take many forms, from **tolerable break-in pitting** to **spallation**. To assist your judgement, please read the following.

<u>General note on pitting:</u>

Pitting is the breaking off of smaller or larger material particles from the active gear tooth contact surface. Whereas the fracture of a tooth results in gearbox failure, pitting will not normally influence the running of the gearbox. There are different degrees of pitting.

◆ NOTE: Fine pitting or areas of pitting hardly influence the operation of the gear-tooth system.

However, pitting will normally increase with the period of operation.

d04351

The speed at which the pitting increases depends on the lubricant used and the load. The pitted area can become so large that the remaining, unaffected tooth flank can no longer transmit the load safely. Further operation of the components in this condition will result in the total destruction of the gear-tooth system.

◆ NOTE: The most common area where pitting forms is on the base of the gear tooth on the drive gear. For this reason, inspect the drive gear first.

Pitting is damage caused by material fatigue. The latest insights reveal that its formation is influenced by exceeding the permissible Hertzian stress for the material, tangential stress on the surface (friction) and temperature strain. This means that in addition to the material and heat treatment of the material, the surface quality and structure, the surface treatment and the lubricant (viscosity at operating temperature and the additives used) are also important.

Pitting can be divided into the following categories according to the size of the pitted area, the type of pitting involved and the number of areas affected.

– minor pitting (breakin pitting)

– advanced pitting

– spallation (large zones of the tooth surfaces have broken off)

Minor Pitting: See Figs. 72-44, 72-45 and 72-46.

Characteristics:
Isolated small areas of pitting (up to approx. 0.5 % of the flank area) or porelike zones of pitting, usually only found at the root of the flank. The formation of this type of pitting may stop once the gearbox wearin period is over.

Causes:
High local pressure on new gears which have not yet been broken in can cause isolated pitting. With increased wear, the stress on these areas is relieved and the pitting may stop. In the same way, changes in the operating conditions can stop the progress of pitting formation.

Conclusion:
This type of pitting does not prevent safe operation. The gear set can remain in use.

◆ NOTE: Figs. 72-44 to 72-46 show gear flanks with minor pitting.

d04351

◆ NOTE: Because of the small size of the pitting shown and the copying process, the pictures may not show the pitting clearly enough. If you are in any doubt, seek assistance by studying technical publications or consult your authorized ROTAX distributor or Service Center.

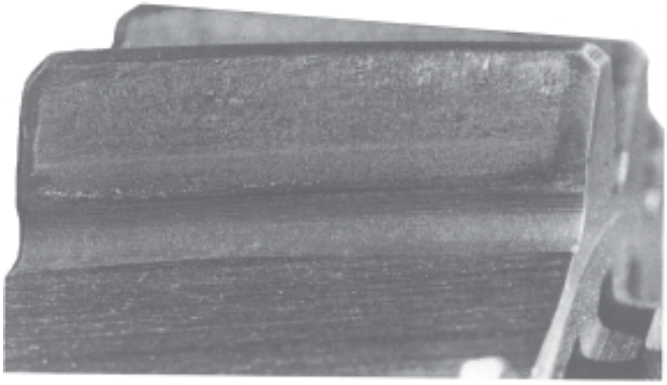

00148

Fig. 72-44
Magn.: approx. 100%

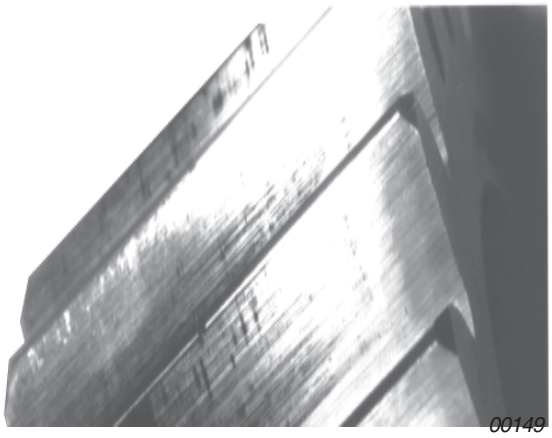

00149

Fig. 72-45
Magn.: approx. 75%

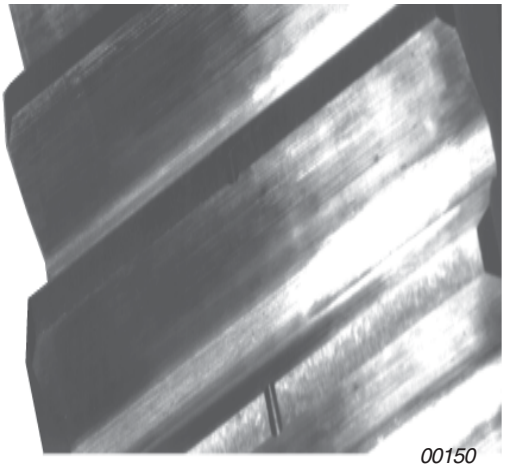

00150

Fig. 72-46
Magn.: approx. 75%

d04351

Advanced pitting:

See Figs. 72-47 and 72-48.

Characteristics:
Larger areas of breakoff, normally appearing as pitting zones. The breakoff surface usually has a shelllike structure. The total pitting zone may reach a size where it impairs smooth engine running noticeably or the remaining flank surface wears rapidly and is destroyed.

Causes:
The pitting can be attributed to material fatigue due to a combination of the mechanical load factors pressure and friction. It is triggered by exceeding the material to excess loads at certain points. Decisive factors for the formation of pitting are: Oil viscosity and oil temperature.

Conclusion:
Pitting of up to approx. 5 % of the flank surface is permissible if the size of the pitting (at its widest point) does not exceed 0.5 mm (0.02 in). If this value is exceeded, the gear set must be replaced!

▲ WARNING: Gears must always be replaced as a set. Replacement of individual dog gears or drive gears is not permissible.

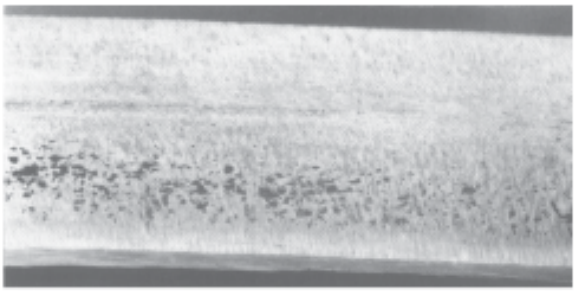

00151

Pitting in the area of the root flank of a spur gear.

Fig. 72-47
Magn.: approx. 75%

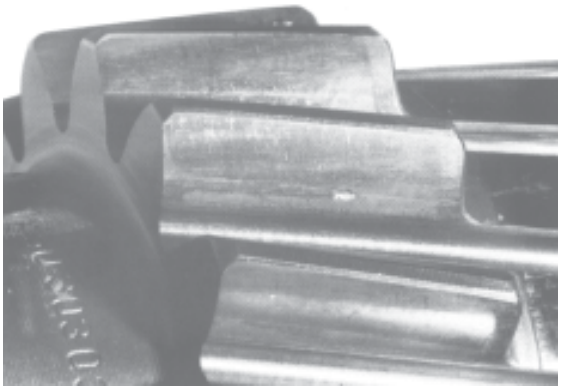

00152

Pitting formation at the foot of spur toothing

Fig. 72-48
Magn.: approx. 75%

d02622

Spallation (large zones of the tooth flank have broken off)

See Figs. 72-49 and 72-50.

Characteristics:
Large triangular areas of the tooth flank have broken off, starting in a grey zone or area of minor pitting on the root of the tooth. The spalling area is of relatively constant depth. Additional cracks may stretch across the flank from the main area. In some areas, the damage reaches the tip area of the tooth, resulting in tooth tip fracture.

Causes:
This type of damage is usually the result of using oil of low viscosity or of high oil temperatures. Otherwise, the causes are the same as for other types of pitting.

Conclusion:
■ CAUTION: If spallation is detected, the gear set must be replaced.

Max. permissible pitting or spallation. See section on advanced pitting.

◆ NOTE: Figs. 72-49 and 72-50. show triangular spallation.

▲ WARNING: Gears must always be replaced as a set. Replacement of individual gears is not permissible.

00153

Fig. 72-49
Magn.: approx. 75%

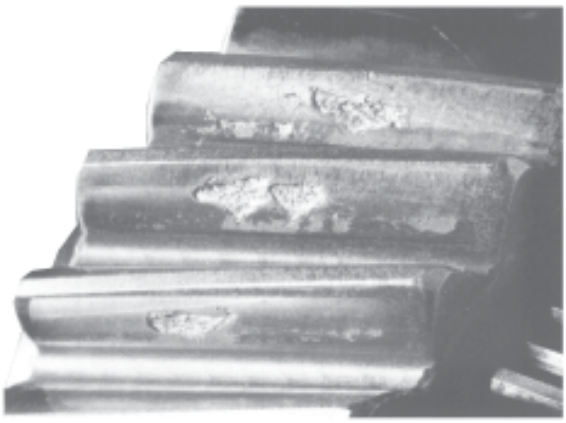

00154

Fig. 72-50
Magn.: approx. 100%

d02622

3.9.13) Propeller gearbox reassembly

See Figs. 72-51, 72-52 and 72-53.

◆ NOTE: At the modification of the gearbox (e.g. reduction ratio, retro-fit of overload clutch) the part number on the gearbox housing must be corrected. See Fig. 72-51/1.

Heat gearbox housing (1) with hot air (or in an oven) to approx 100 ˚C (212 °F). Press shaft seal (2) into the gearbox housing from the inside, using insertion jig, part no. 876518, and grease sealing lips (3). Add radius ring (4) 36/50/ 5.5 with rounded side towards shaft seal. The weight of the ball bearing (5) must cause it to fall into the bearing point of the heated gearbox housing. Fix ball bearing with LOCTITE 221 in position, using 4 hardened washers (6) 7.2/18.8/3 and hex. screws (7) M7x16. Tighten to 15 Nm (130 in.lb).

◆ NOTE: For optimum lubrication of the bearing this has to show with the open side to the propeller flange.

Slide the propeller shaft into the gearbox housing and place on a suitable flat surface (8). Apply LOCTITE Anti-Seize to the bearing seat (10) of the propeller shaft (9). Fit a sleeve (12 which is approx. 30 mm (1.18 in.) longer than the propeller shaft. The inner diameter should be selected so that the sleeve presses against the inner ring (11). Press on the gearbox housing, turning it slightly (left-right).

■ CAUTION : Do not tap!

It is an advantage if the gearbox housing is still warm at this stage.

Place distance sleeve (13) 35.2/42/8 and eccenter (14) for the fuel pump onto the propshaft.

Place these components on horizontally and in this order: step collar (15) with the ø40.8 mm (1.60“) towards the disc spring, then two disc springs (16) facing each other and the third disc spring (17) with its back to the second disc spring. Make sure that the disc springs lie against the centering rib (18) of the clutch hub. Apply LOCTITE Anti-Seize to the tooth profile of the slipper clutch (19) and place it onto the propeller shaft.

Carefully fit pre-oiled bearing bushing (20) onto the propeller shaft using circlip pliers. Push on dog gear (21), apply LOCTITE Anti-Seize

d05737

to both sides of the plastic thrust washer (22) 33.2/51/1.2 and place it on together with drive gear (23).

◆ NOTE: Gearboxes without an overload clutch have no third disc spring (17), centering rib or slipper clutch. Instead, they are fitted with a second step collar, see Fig. 72-53.

■ CAUTION : If the disc springs are not well centered, the dog gear cannot be depressed sufficiently to allow insertion of ring halves. Do not increase the pressure, but remove the clutch again and center the disc springs more accurately.

◆ NOTE: Coat contact surfaces of disc springs and dogs as well as the tooth profile of propeller shaft with LOCTITE Anti-Seize.

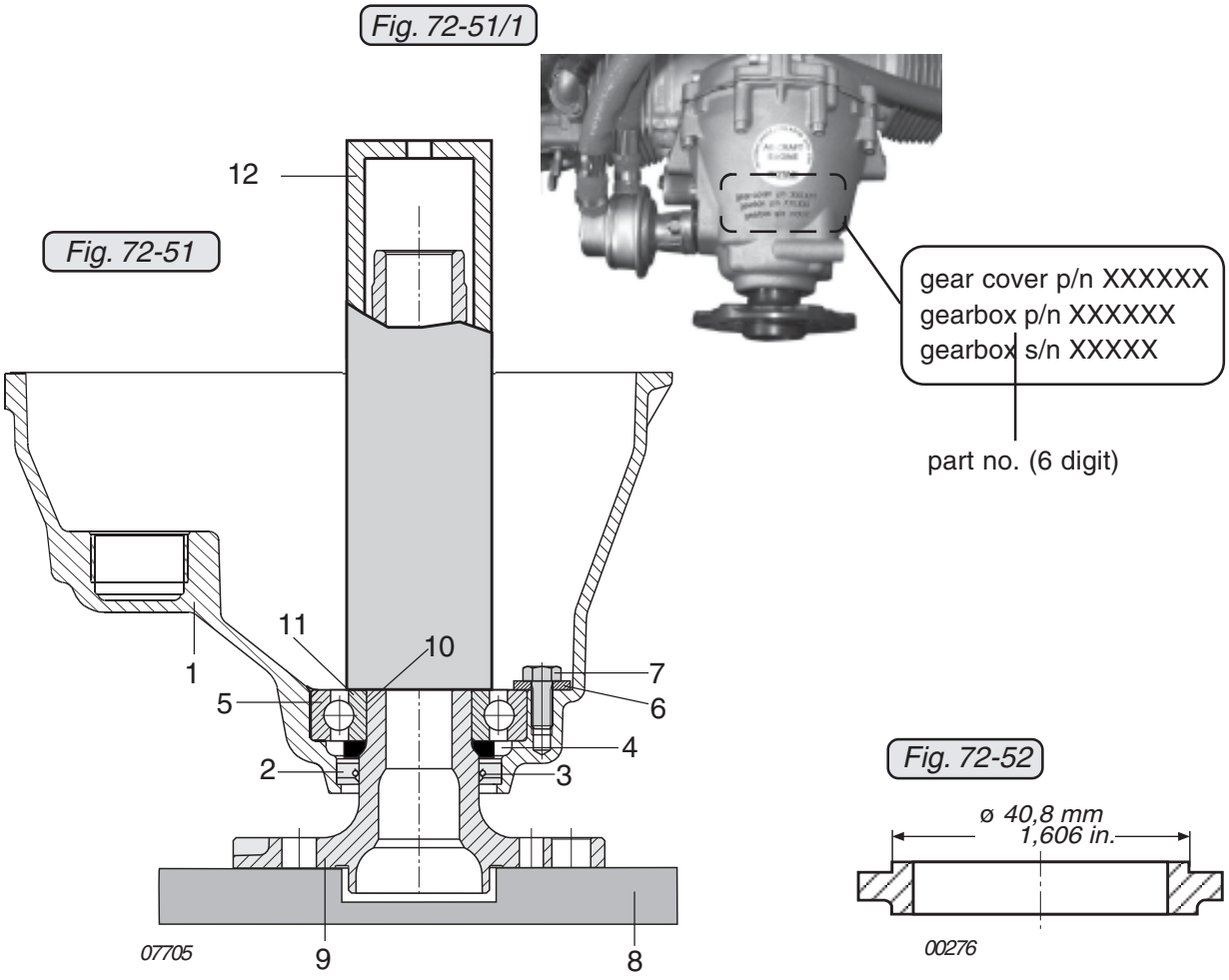

■ CAUTION : Danger of material damage! Always install a new thrust washer.

3.9.14) Disc spring pre-tension adjustment (with overload clutch)

See Figs. 72-53 and 72-25 (see Section 72-00-00 / 3.9.4).

When the propeller shaft assembly is uncompressed, the contact surface (24) for the ring halves must lie in the groove of the propeller shaft 1 mm (0.039 in.) over the upper edge (25). The difference must be compensated for by placing shims (26) between eccenter (14) and step collar (15).

◆ NOTE: To facilitate adjustment, they can first be pushed apart until the top edge (25) of the contact surface (24) for the ring halves slips into the groove in the propeller shaft and a 1 mm (0.039 in.) compensating shim (26) can be inserted between step collar (15) and eccenter (14).

◆ NOTE: To check the friction torque of the dog hub in free rotation, see the corresponding Maintenance Manual (Line Maintenance) for the respective engine type, 912 Series or 914 Series.

3.9.15) Disc spring pre-tension adjustment (with dog hub)

See Fig. 72-53

Completely compress disk springs utilizing mounting yoke part no. 876885. The lower edge of the groove (25) in the propeller shaft must align with the top edge of the retaining ring (24) (distance must not be more than 0.2 mm (0.008 in)). Set distance by shims to max. 0.2 mm (0.008 in).

After completing the adjustment of the disk spring travel, depress dog gear (2) with mounting yoke, part no. 876885, until both ring halves can be inserted.

■ CAUTION : Always use new ring halves.

Insert ring halves and release pressure, see 72-00-00 sec. 3.9.4.

■ CAUTION : If the spacing is insufficient, never overpress the springs, as this will cause the dog gear to collide with the gear cover.

■ CAUTION : The ring halves must be completely inserted in the groove on propeller shaft!

Check that the ring halves are positioned correctly.

d04351

Fig. 72-53

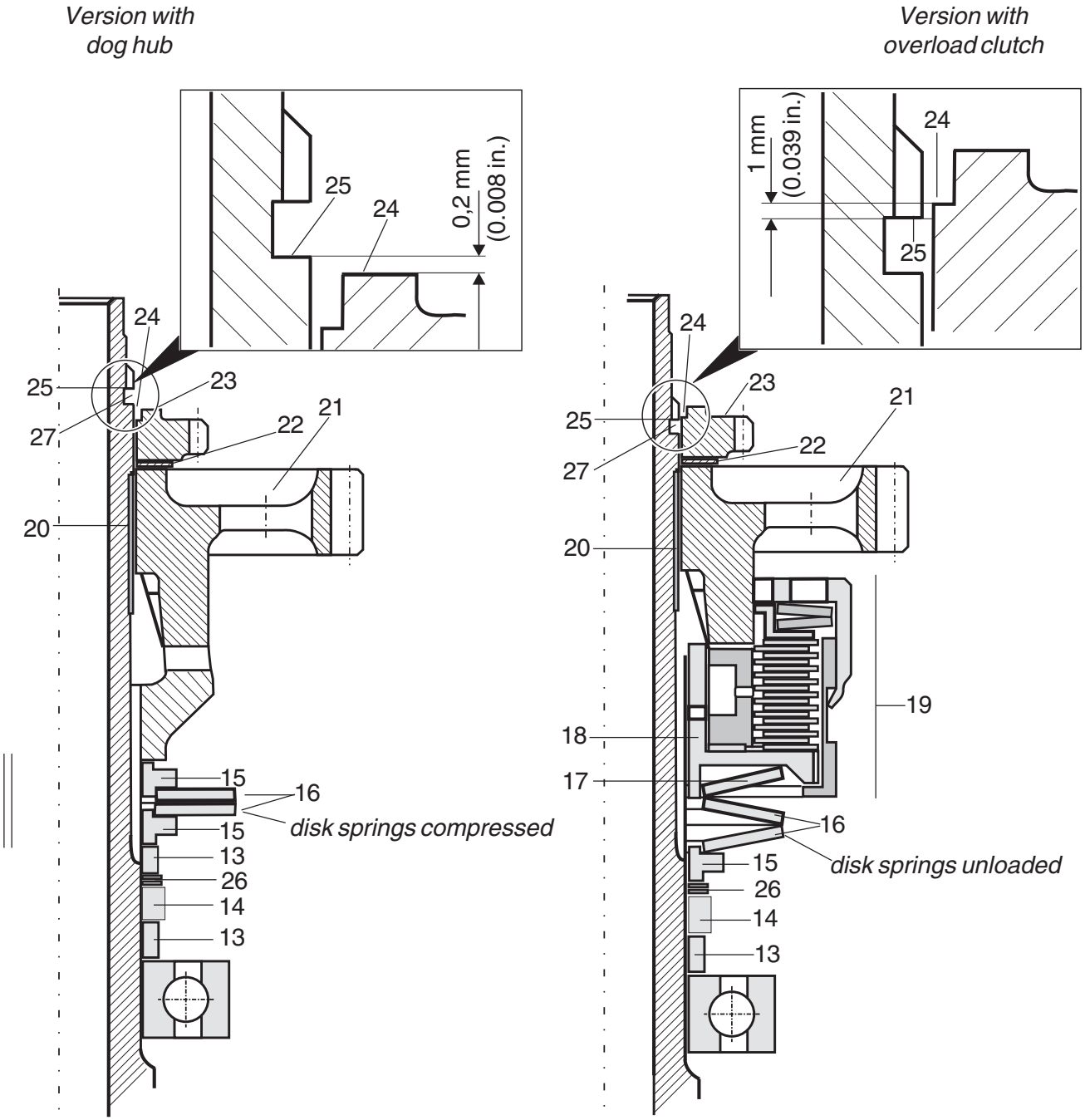
Version with dog hub
Version with overload clutch
0,2 mm (0.008 in.)
1 mm (0.039 in.)
25
24
23
21
22
27
20
19
18
17
16
15
13
26
14
disk springs compressed
disk springs unloaded
06296
d04776

3.9.16) Propeller gearbox — installation

See Figs. 72-54, 72-55 and 72-56.

Carry out a visual inspection of the crankshaft (1) on the power take off side. Slide drive gear (2) onto the crankshaft (3).

◆ NOTE: Due to the restricted tolerances it can occur that it is difficult to slide the drive gear onto the crankshaft. In such a case try to slide on the drive gear in a different position. Don't use tools - don't press or strike the drivegear onto the crankshaft.

■ CAUTION : Before installing, clean hex. screw (4) with LOCTITE 7063. Make sure to have an appropriate installation position of the friction washer (5).

Apply LOCTITE 648 to hex. nut (4) M30x1.5 and screw the nut onto the crankshaft together with the friction washer (5) VS30. Tightening torque 200 Nm (147.5 ft.lb). Then measure the run out (CS24).

See 72-00-00 sec. 4.

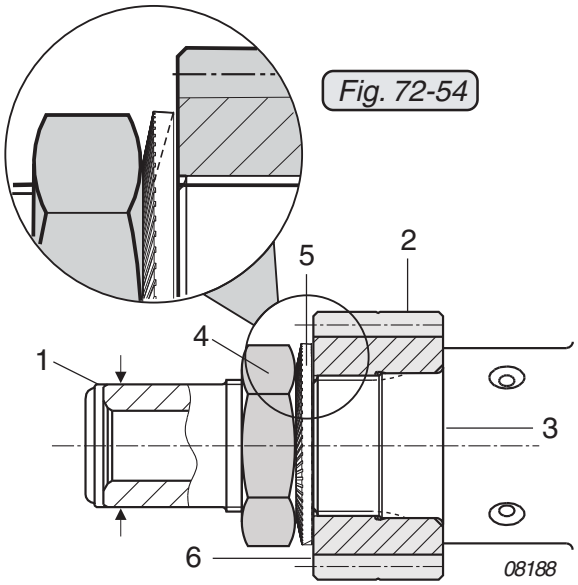

Fig. 72-54

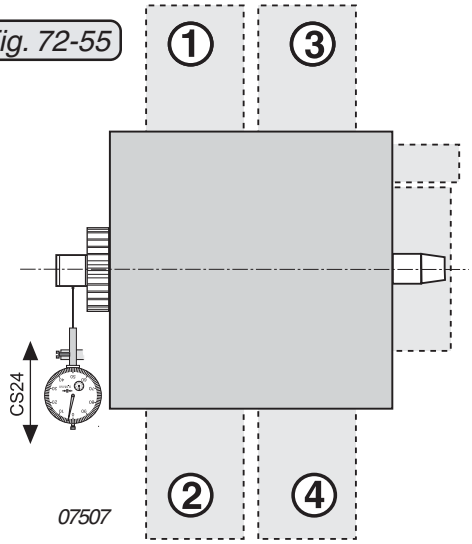

Fig. 72-55

◆ NOTE: If there is slight radial run out, reinstall nut (4) and measure again.

■ CAUTION : Dog gear and drive gear are paired and are marked with a consecutive serial number (6). Use only parts with the same serial number!

d05737

Clean sealing surface of gearbox housing and crankcase. Oil which drains onto the sealing surface will eventually create a leak. Insert both dowel pins 6x20 into crankcase. Grease oil seal for propeller shaft in crankcase. Lubricate bearing bore for propeller shaft.

◆ NOTE: Engines of the 912/914 Series configuration 3 and configuration 4 have no oil seal.

Keep the rollers of the roller bearing in position with grease to facilitate assembly of propeller shaft.

Position gearbox housing with completely pre-assembled gear unit, previously coated with a thin layer of sealing compound LOCTITE 5910. Turn propeller shaft slightly to allow the dog gear to engage. By gently tapping on the gearbox housing (not on the propeller shaft) with a plastic mallet, the gearbox is fitted on the crankcase.

◆ NOTE: If there is resistance with a gap of approx. 10 mm (0.4 in.), the alignment of the rollers may need readjusting. Fix the rollers in position again with grease, press them outwards and / or turn the vacuum pump /governor gear slightly to allow engagement.

■ CAUTION : If excessive force is applied at assembly, the roller bearing or the vacuum pump drive can be damaged.

If the sealing surface becomes oily during the assembly process, clean it and reapply surface sealing compound LOCTITE 5910 or 574.

Tighten gearbox evenly with 2 allen screws M8x45 and 8 allen screws (7) M6x45 and lock washers in a crosswise pattern.

Fig. 72-56

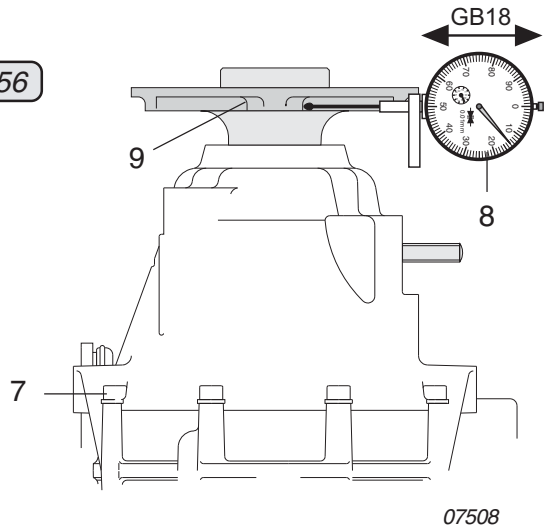

d04776

Check the radial gear backlash at the propeller flange (9) with the dial gauge (8), dimension (GB18). See 72-00-00 sec. 4.

Check the friction torque. See the relevant Manual (Line Maintenance) 12.00.00 chapter 7 of the corresponding engine type 912 Series and 914 Series.

Remove crankshaft locking screw and fit crankshaft plug screw M8 x 20 with new Cu gasket ring and tighten to 15 Nm (133 in.lb). For verification turn crankshaft with spanner 24 a/f on hex. screw on magneto side.

3.10) Cylinder head — removal

See Figs. 72-57 and 72-58.

If components of several cylinders are disassembled, they must be marked to ensure correct coordination at refitting.

Remove allen screw M6x25 (1) and washer from valve cover (2) and lift off valve cover and large and small O-ring. Remove crosswise 2 flanged nuts (3) with washers (4) and two collar cap nuts M8. The collar cap nut is inside the valve cover and has a sealing edge.

◆ NOTE: There is no washer required under the collar cap nut.

On newer engine versions, no washers (4) are fitted. They can be left out during assembly on all engine versions.

■ CAUTION: Do not damage the sealing surface!

Using both hands, carefully pull the complete cylinder head off the cylinder (5).

Fig. 72-57

00277

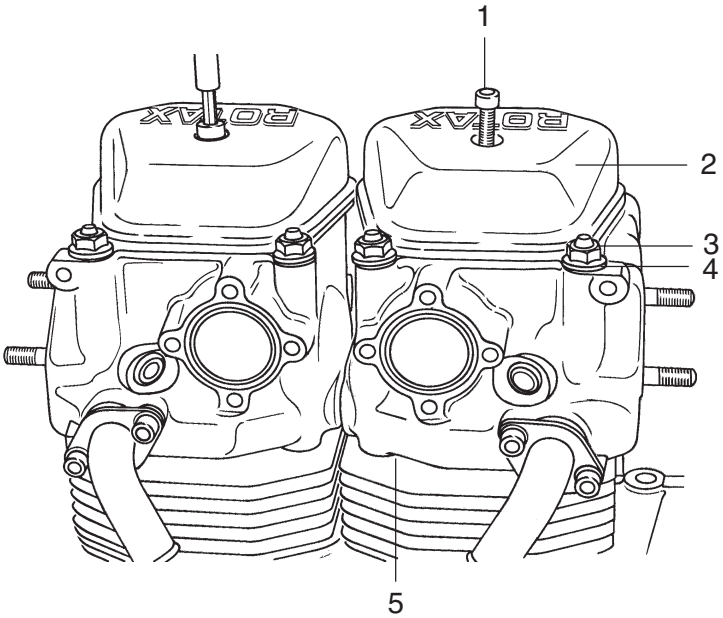

d04776

Keep both push rods (6) in position in the oil return tubes (7), seal oil bore of push rods with finger and remove cylinder head (8). The oil return tubes remain with the cylinder head. Remove O-rings (9) 16x15 from the oil return tubes or from the crankcase (10).

Store cylinder head in such a way that the sealing surface and oil return tubes are not damaged. Lift out oil filled push rods, stop oil from dripping by sealing with finger. Coordinate push rods with cylinder heads to prevent any mix-up.

Mark the installation position of the push-rod with a suitable pen (e.g. touchup pen) (e.g. ¨IV1“ for intake valve cylinder 1). If the parts are refitted in exactly the same position and assignment as before, the push-rods can be used again. This is because the parts have become broken in to each other in the course of operation before disassembly.

Fig. 72-58

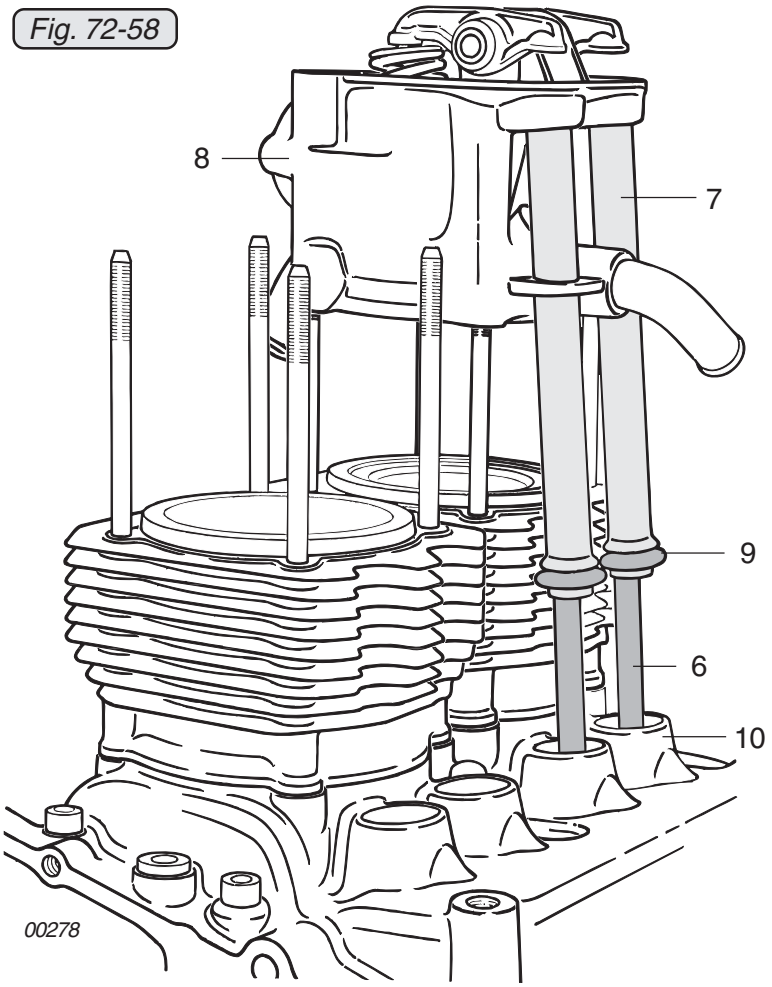

d02622

3.11) Cylinder head - disassembly

See Fig. 72-59.

If the rocker arms are to be dismantled without removing the cylinder head, turn the crankshaft to set the piston of the respective cylinder to ignition T.D.C. so that only little pressure remains on the rocker arm. Depress rocker arm with check lever part no. 877690 towards the hydraulic valve tappet. Now the rocker arm is completely released and the rocker arm shaft can be removed.

◆ NOTE: Never use force to press out the rocker arm shaft. The hexagon of the collar cap nut may be in an unfavorable position and prevent removal of the rocker arm shaft. In this case, loosen the nut.

Withdraw rocker arm shaft and remove both rocker arms.

◆ NOTE: Newer engine versions have plastic bushings as bearings. These plastic bushings must be laid aside in an ordered manner to prevent any mixup.

Compress the valve springs using valve spring mounting device (1), part no. 877380, valve spring mounting pliers (2) or similar tool and lift out valve cotters. Release valve spring. Remove valve spring retainer and both springs and withdraw valve.

◆ NOTE: Prior to removal of valves, clear burrs which may be present on valve stems to prevent damage to valve stem seal and valve guide. Mark valves coordinately.

Repeat procedure for the second valve. Clean cylinder head.

Check oil return tubes for leaks (visual inspection). If there is leakage in area (3), the respective oil return tubes must be replaced. For this procedure, heat the return tubes with a hot air gun to max. 120 °C (248 °F). Extract the oil return tubes and remove any glue residues from the bore. Apply LOCTITE 648 on the new oil return tubes in the area of the two grooves and twist and push tube into position in the preheated cylinder head. After that heat the cylinder head 10 to 15 minutes to 100 °C (212 °F) so that the LOCTITE hardens.

d04351

When replacing the coolant elbow, mark its position, heat the area with a hot air gun to max. 120 °C (248 °F) and unscrew the fitting. Remove residues of LOCTITE means and check threads. Apply LOCTITE 648 to the thread on the cylinder head and to the new coolant fitting and screw the fitting into the cold cylinder head. Leave cylinder head to harden for approx. 10 minutes at 100 °C (212 °F).

If there are oil carbon residues on the sealing face with the cylinder, remove them carefully. Check that the sealing face is level.

In the case of slight wear, valve and valve seat may be seal-lapped, using emery paste.

Clean cylinder head and individual components with suitable cleaning agents. See 00-00-00 sec. 10.3.

Check cylinder head sealing surface and if necessary, blue it and the cylinder. The flat surface of the cylinder and the cylinder head may only be slightly machined.

◆ NOTE: In the event of more serious leakage, cylinder and cylinder head can be reworked as described in the Overhaul Manual by a ROTAX authorized overhaul facility.

If the engine has been "run hot", the hardness of the cylinder head and the cylinder material must be checked.

See 72-00-00 sec. 5 and the corresponding Maintenance Manual (Line Maintenance) for the respective engine type 912 or 914 Series.

Fig. 72-59

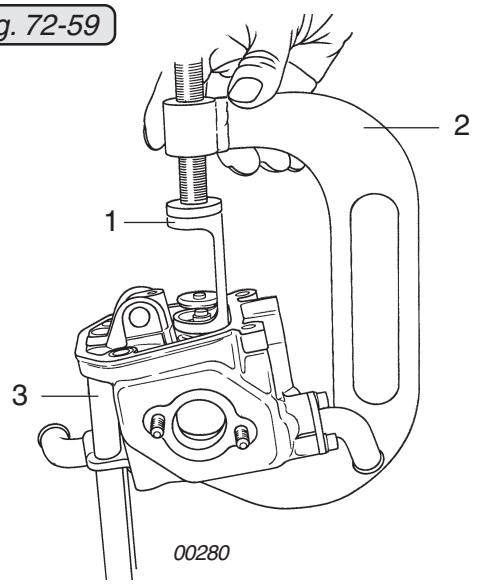

d04776

3.11.1) Cylinder head and exhaust manifold studs

See Figs. 72-60, 72-61 and 72-62.

Studs M8 x 20/23 (1) are for attaching the exhaust manifold. Check for tight fit and any damage.

When replacing a stud, it is fitted so that the longer thread (23 mm (0.91 in.)) is screwed into the cylinder head. Secure studs with LOCTITE 648.

Tightening torque 8 Nm (70 in.lb).

■ CAUTION: If the engine has been overheated, the hardness of the cylinder head must be checked. See the corresponding Maintenance Manual (Line Maintenance) for the respective engine type, 912 Series or 914 Series. Hardness is tested at control point CH08 as shown in Fig. 72-61.

Procedure for hardness test:

CH08: HB2.5/62.5 DIN EN ISO 6506-2

■ CAUTION: The results of the hardness test must be entered in 72-00-00 sec. 5.

Fig. 72-60

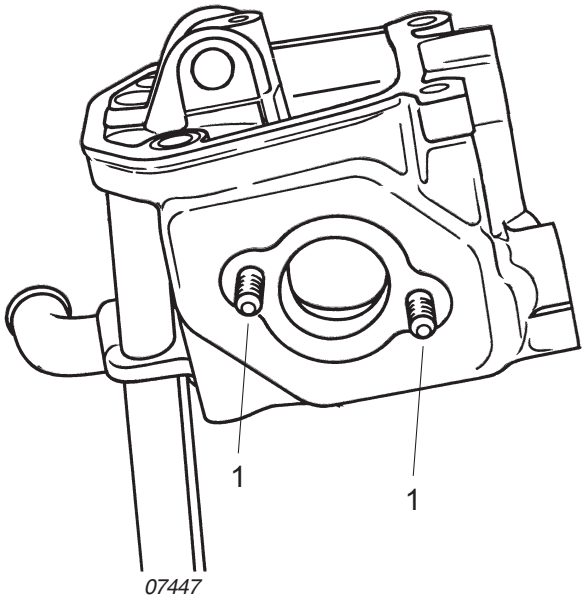

Fig. 72-61

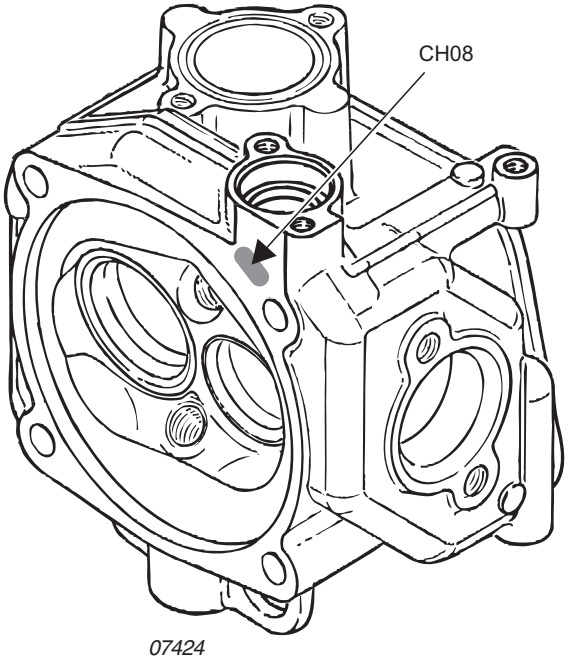

d04776

◆ NOTE: If the rocker arm shaft bearing (CH05) is worn, it can be reworked up to a certain limit. The cylinder head must be sent to a ROTAX authorized overhaul facility for this purpose.

Fig. 72-62

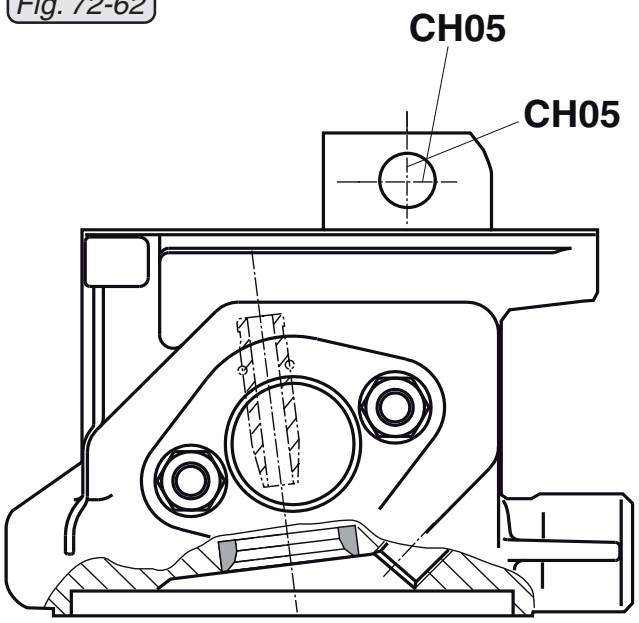

07831

d02622

3.11.2) Reworking of the sealing surface to the exhaust manifold

See Fig. 72-63.

Reworking is permissible if there is a leak at the sealing surface (1) to the exhaust manifold.

If a rework is necessary, the cylinder head must be sent to a ROTAX authorized overhaul facility for overhaul.

Fig. 72-63

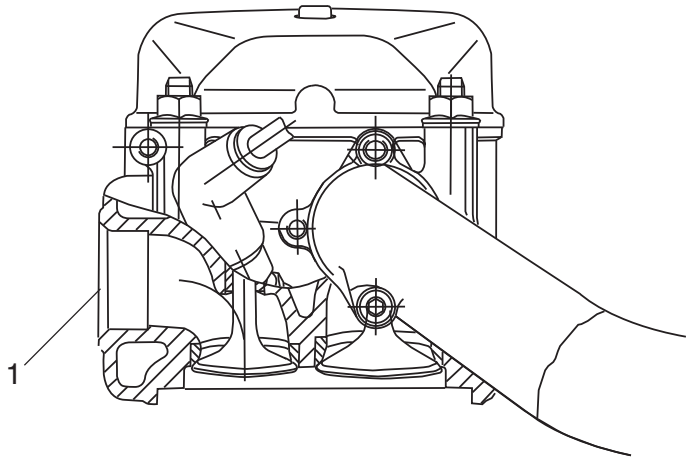

08244

d04351

3.11.3) Valve guides

See Figs. 72-64 and 72-65.

Check diameter of valve stem (1) and inner diameter of valve guide (2), see dimension (VT01) and dimension (CH01).

If wear limit is reached, replace valve guide.

See 72-00-00 sec. 4.

For this procedure, the cylinder head must be sent to a ROTAX authorized overhaul facility for maintenance.

Fig. 72-64

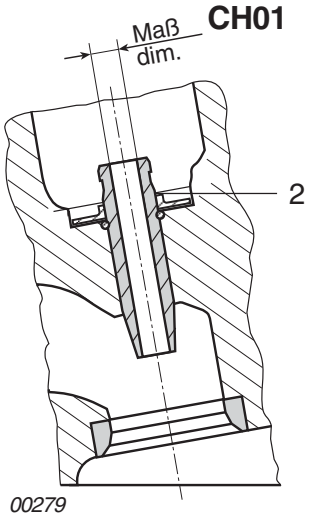

Fig. 72-65

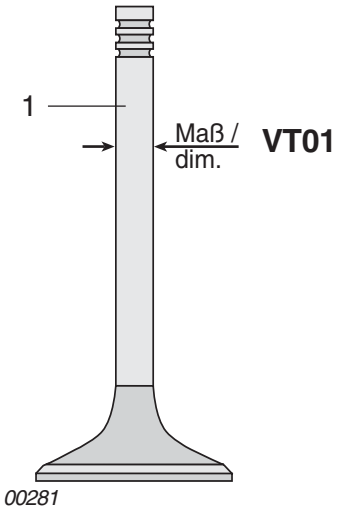

d02622

3.11.4) Valve seats

See Fig. 72-66.

Carry out a visual inspection of the valve faces for damage and wear.

Apply engineers blue evenly to the valve faces and fit the valves into the respective valve guides. Turn the valve under gentle pressure to produce a clear imprint of the sealing surface on the valve seat ring.

Ensure that the sealing surface of the valve seats (1) is clean and if necessary, regrind with valve lapping paste.

■ CAUTION: The annular imprint on the valve face must be a continuous, unbroken ring.
The width of the imprint corresponds to the width of the valve seat CH02.

■ CAUTION: If burned spots or deformation are detected, send the cylinder head to a ROTAX authorized overhaul facility for overhaul or repair.

See 72-00-00 sec. 4.

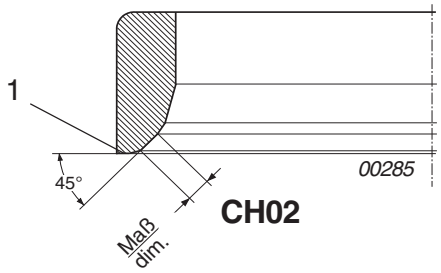

Fig. 72-66

d04776

3.11.5) Valves

See Figs. 72-67, 72-68, 72-69 and 72-70.

Intake valves are checked as follows:

Carry out a visual inspection of the valves for damage and wear.

Clean valves, measure valve stem diameter and check valve disk for wear.

The valve stem diameter VT01 is measured at the edge of the moving path (1) of the valve stem. See Fig. 72-67.

See 72-00-00 sec. 4.

Check valve front surface (5) for pitting.

Check valve stem for possible deposits. Heavy oil carbon residues (2) on the valve stem indicate increased wear on the valve guide.

Fig. 72-67

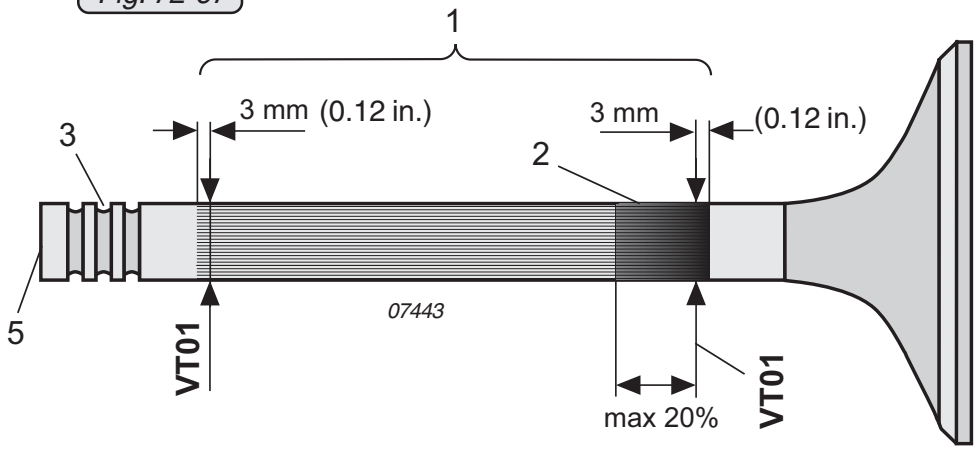

d02622

Oil carbon residue on up to **max 20%** of the moving path is permissible. See Fig. 72-67.

■ CAUTION: If there are heavier deposits, the valve may already have overheated and must be replaced. There is a danger of valve fracture at the weld.

Carry out a visual inspection of the 3 retaining grooves (3) on the valve stem for damage or wear. To check the wear, fit a new valve cotter. It must fit without perceptible clearance.

Place the valve on roller blocks (4), roll it and measure the max. permissible out of true value VT02 on the valve disk using a dial gauge. See Fig. 72-68.

◆ NOTE: The out of true value can also be measured with the dial gauge adapter assembly part no. 976140 (7). See Fig. 72-69.

See 72-00-00 sec. 4.

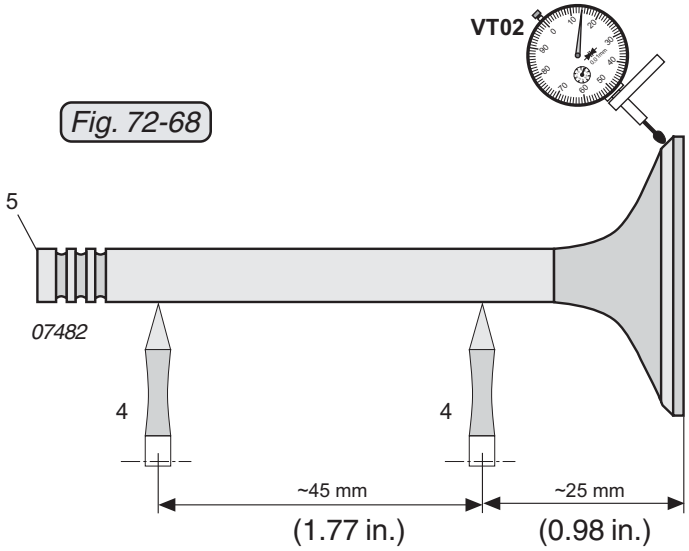

Fig. 72-68

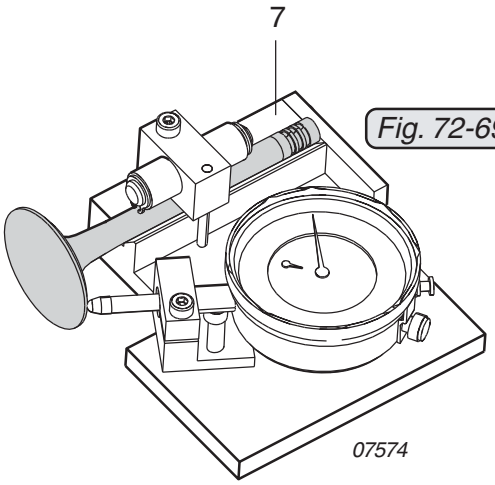

Fig. 72-69

d02622

Check the valve face for wear caused by pounding VT03.

Pounding may occur on the inside and the outside edge of the seat surface and must be measured as shown in Fig. 72-70.

See 72-00-00 sec. 4.

■ CAUTION: The valve seat at the valve disk is surface hardened. For this reason, the valve disk must not be reworked. If necessary, the valve must be replaced.

However, lapping with valve lapping paste is possible.

Seal-lap both valves and check for leakage.

■ CAUTION: The end of the valve stem (5) must not be ground. See Fig. 72-68.

Fig. 72-70

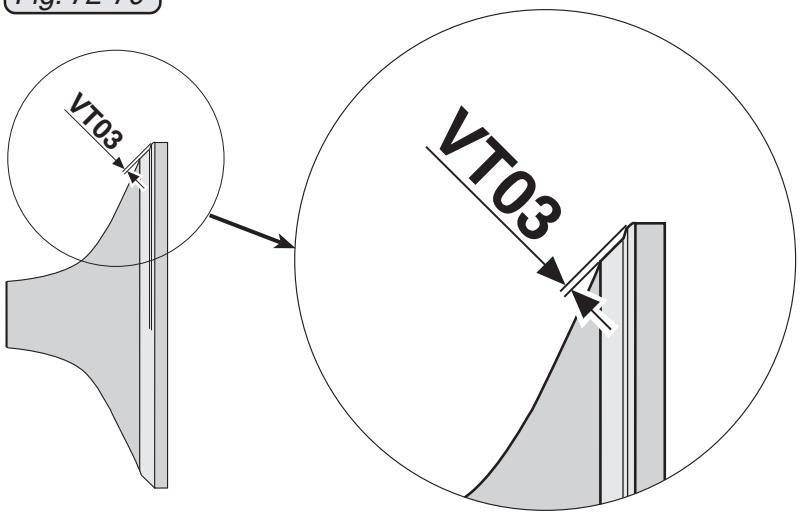

07483

d04231

3.11.6) Valve springs

See Figs. 72-71 and 72-72.

Carry out a visual inspection of the valve springs for damage and wear.

Depending on engine version, dual or single valve spring configurations are planned. However, dual and single valve springs must not be used on the same engine.

◆ NOTE: The valve springs can be distinguished by the different wire thickness and the different spring strength.
The springs for inlet and outlet are equivalent and symmetrical.

Dual valve spring configuration:

–	Inner valve spring (1)	2.3 mm (0.09 in)
–	Outer valve spring (2)	3.5 mm (0.14 in)

Single valve spring configuration:

–	Single valve spring (3)	3.85 mm (0.15 in)

Valve spring support (4)

Valve cotter (5)

Fig. 72-71

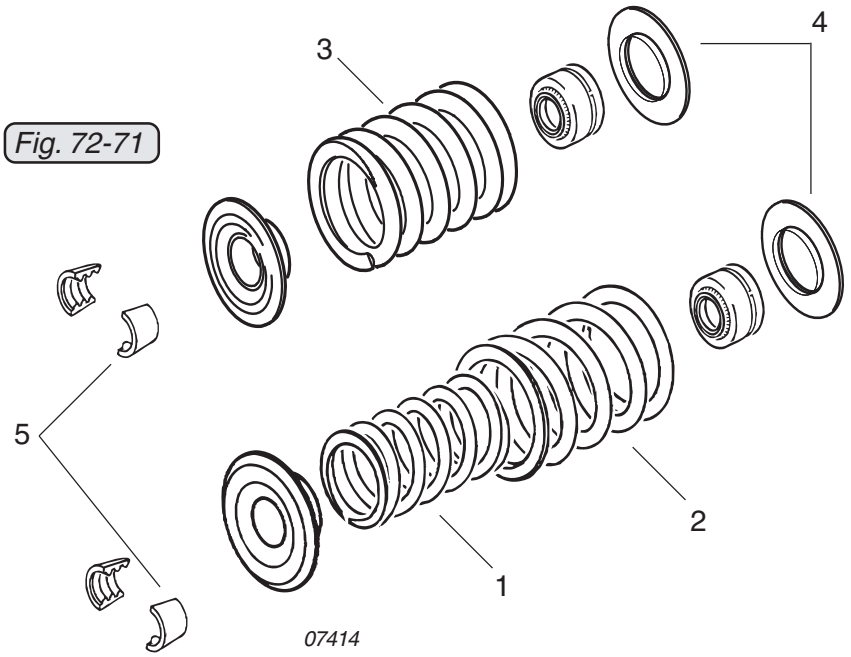

d05737

To check the spring force, apply a test load (**F**) and measure the remaining spring length VT04. For the measurement necessary tools are available on the free market. See Fig. 72-72.

Test load for dual valve spring configuration:

– Test load (**F**) for inner spring 53 N (11.91 lbf)

– Test load (**F**) for outer 133 N (29.80 lbf)

Test load for single valve spring configuration:

– Single valve spring 200 N (45 lbf)

■ CAUTION: Replace valves shorter than the minimum length.

◆ NOTE: The spring length should be as equal as possible on the inlet and outlet sides (max 0.4 mm (0.016 in.) in difference), otherwise replace the springs.

See 72-00-00 sec. 4.

Fig 72-72

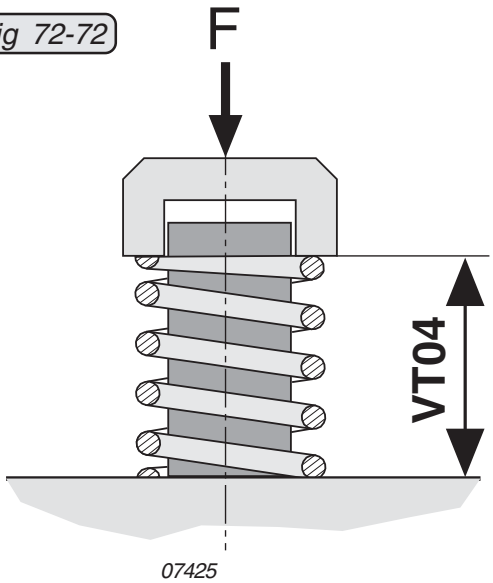

d05737

3.11.7) Washers

See Figs. 72-73, 72-74 and 72-75.

Carry out a visual inspection of the washers for damage and wear.

The wear must be measured radially with a dial gauge, starting from the reference area (on the inner part of the valve spring support) in measuring range radius (1) and working towards the outside. Dimension t=max. 0.04 mm (0.0016 in.). see Fig. 72-75. Pounding (wear) of more than 0.04 mm (0.0016 in.) is not permissible. If the dimension exceeds this limit, the valve, the valve spring support, the valve spring retainer, the valve cotters and the hydraulic valve tappet or any other damaged components must be replaced on the affected valve.

◆ NOTE: The valve spring support can indicate a malfunction of the valve train as a result of badly or insufficiently vented hydraulic valve tappets. Under normal conditions, no measurable wear will be seen, even after longer periods of operation. If a visual inspection reveals pounding wear on the contact surface, the current wear must be tested using a dial gauge.

See SI-912-018 / SI-914-020, “Purging of lubrication system”, latest issue.

Fig. 72-73

„magnified image“

05450

Fig. 72-74

„magnified image“

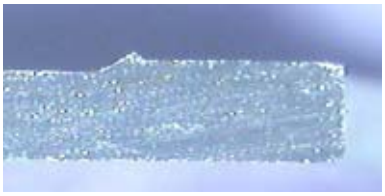

05451

Fig. 72-75

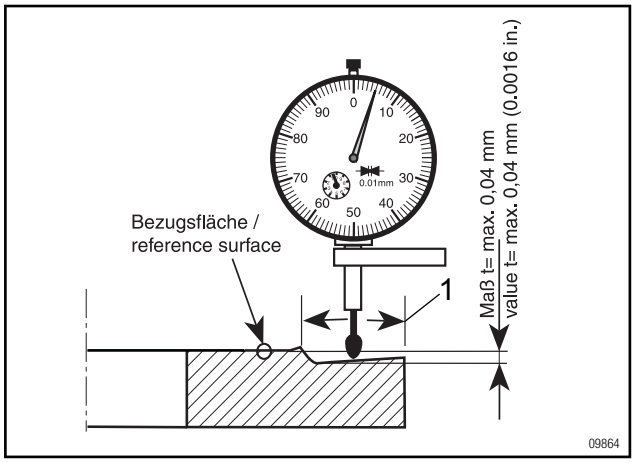

09864

d05737

3.11.8) Rocker arm and rocker arm shaft

See Figs. 72-76 and 72-77.

The rocker arm bearing (1) is lubricated via the hollow pushrod (2) to the ball joint (female) (3). The oil flows through the oil ducts (4) in the rocker arm to lubricate the rocker arm bearing. The oil exit and thus the splash oil lubrication of the complete valve mechanism is via bore (5) The rocker arms for the inlet and outlet are different.

Check surface of rocker arm shaft and inner diameter of the rocker arm bearing bush (6) for signs of friction. Carry out a visual inspection of the valve stem contact area (7) and ball joint (female) (3) of the rocker arm. Excessive signs of wear indicate lack of oil. Slight reworking of contact area (7) for the valve stem is permissible. Check oil bores (4) in the rocker arm for free passage.

◆ NOTE: Oversize rocker arm shafts and rocker arm bushings are available for repairing the rocker arm bearing in the cylinder head.

The bronze colored fitted bearing bushing (6) cannot be replaced. If necessary, replace the whole rocker arm.

3.11.8.1) Rocker arm with plastic bushing

See Figs. 72-78, 72-79 and 72-80.

In the case of plastic rocker arm bushings (2), it must be ensured that the bushing is of slide fit design. After installation, it must still be possible to rotate it against the rocker arm bore.

Fig. 72-76

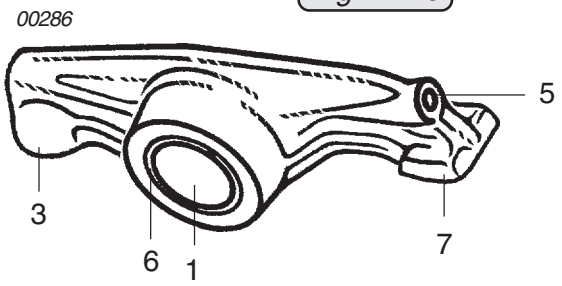

Fig. 72-77

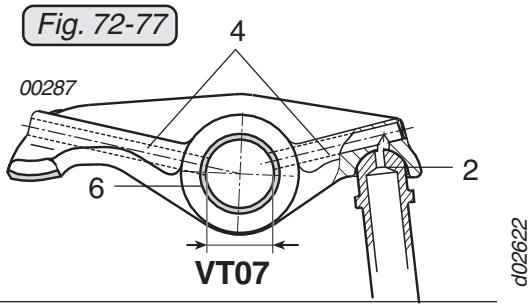

To allow this, the plastic bushing is equipped with a circular groove (1) on its circumference via which it is supplied with oil. The bushing can be installed in any position.

See 72-00-00 sec. 4.

The plastic bushing must be adequately oiled before installation.

■ CAUTION: When installing the rocker arm, it is important to ensure that the bushing (2) is fitted together with the rocker arm.
See SI-912-009 /SI-914-010,“Introduction of a new rocker arm bushing“, latest issue.

◆ NOTE: Oversize rocker arm shafts and rocker arm bushings are available for repairing the rocker arm bearing in the cylinder head. Ensure that the correct rocker arm bushing is fitted. For easy identification, the oversize rocker arm bushing, part no. 933397, has two opposed bores (3).

Fig. 72-78

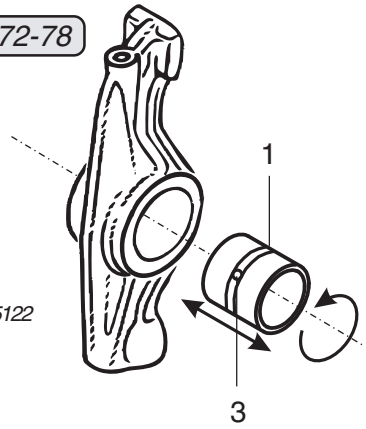

Fig. 72-79

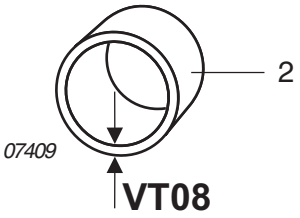

Fig. 72-80

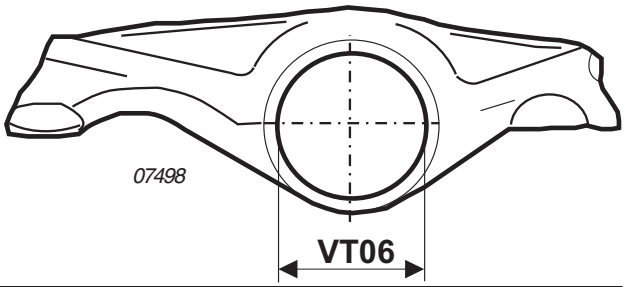

d02622

3.11.8.2) Rocker arm with pressed sinter bushing

See Fig. 72-81.

See 72-00-00 sec. 4.

The bearing bush cannot be replaced. If the rocker arm is worn, it must be replaced with a rocker arm with a plastic bushing.

◆ NOTE: When doing so, check whether an oversize rocker arm shaft is fitted.

Fig. 72-81

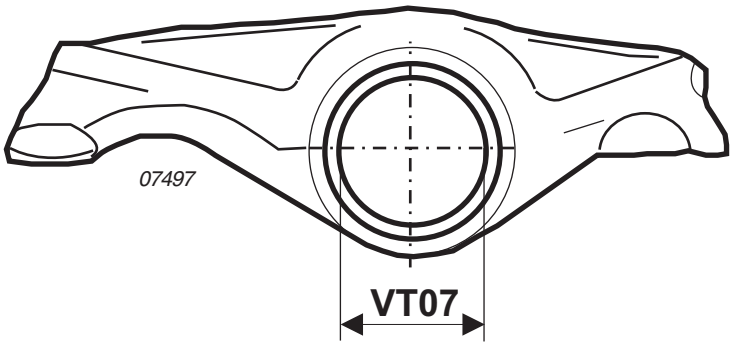

3.11.8.3) Rocker arm shaft

See Fig. 72-82.

See 72-00-00 sec. 4.

Check the surface of the rocker arm for signs of friction.

◆ NOTE: Oversize rocker arm shafts and rocker arm bushings are available for repairing the rocker arm bearing in the cylinder head.

Fig. 72-82

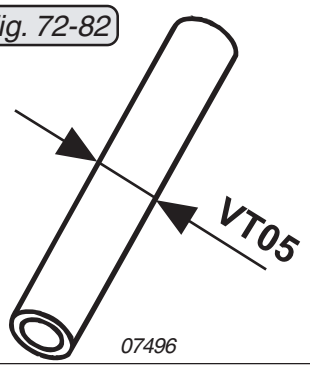

d02622

3.12) Cylinder head reassembly

See Fig. 72-83.

Place valve spring support (1) in position on the valve guide and fit new valve stem seal (2) on inlet side only. Push oiled intake valve (3) into the valve guide from the outside, slide on both valve springs (outside (4) and inside (5)) or single valve spring (17) and the valve spring retainer (6). Press the valve springs together with the mounting device and pliers, insert the valve cotters (7) and relieve the valve springs, see also Fig. 72-59 in 72-00-00 sec. 3.11. Carry out the same procedure on the exhaust valve (8).

◆ NOTE: Ensure correct positioning and equal spacing of the valve cotters.

Apply MOLYKOTE G-N to the rocker arm bore (9), the pushrod head (10) and the valve contact area (11). Position inlet rocker arm (12) and outlet rocker arm (13) with bushing (15, 16), depending on the specific configuration, apply MOLYKOTE G-N to the rocker arm shafts (14) on both sides, see 00-00-00 sec. 10.3, and push into the bearing support.

◆ NOTE: The rocker arm bearing support is a slide fit. Do not exert force!

◆ NOTE: Fig. 72-83 shows the configurations with single and dual valve springs.

Lubricate all movable internal parts with engine oil.

d02622

Fig. 72-83

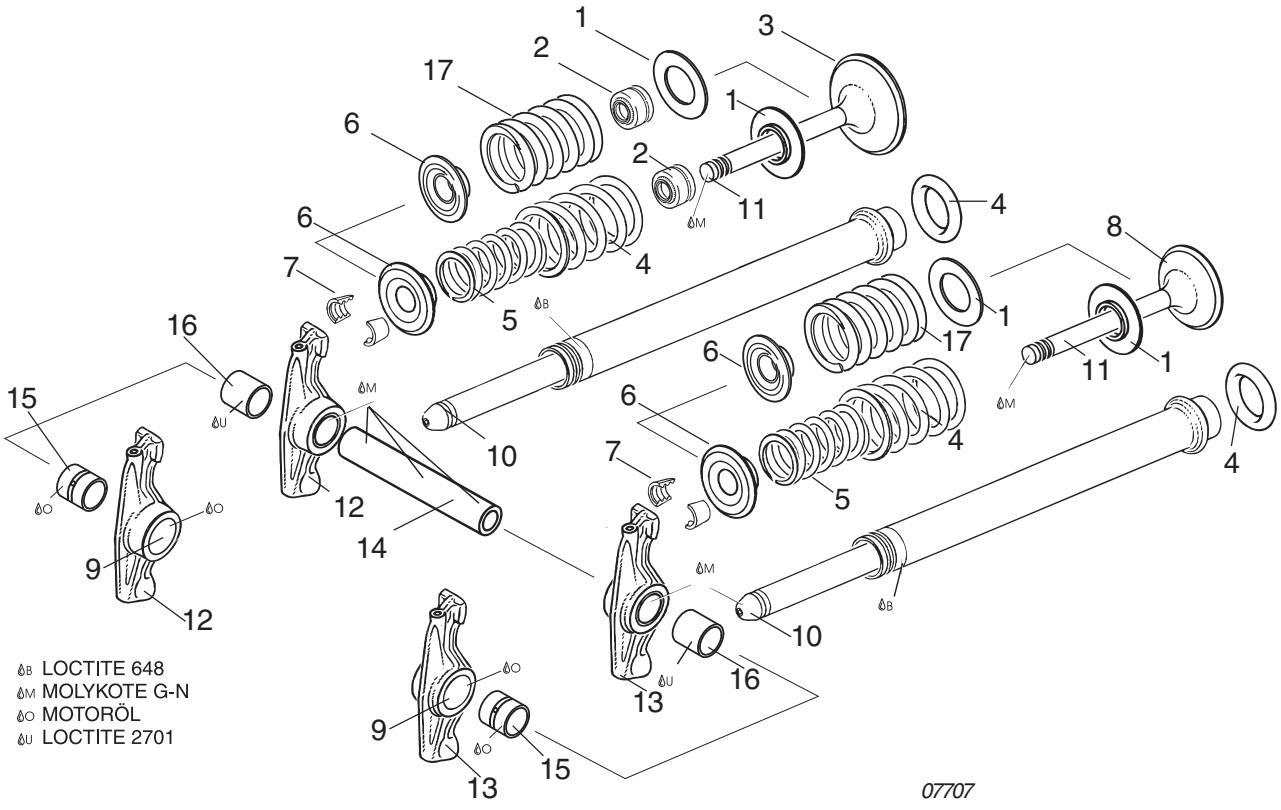

d02622

3.13) Cylinder and piston - removal

See Figs. 72-84 and 72-85.

◆ NOTE: Prior to removal, mark cylinders and pistons in pairs to ensure correct coordination on re-assembly. The cylinders are all identical in design. The piston pin center is offset from piston center.

Move the piston to T.D.C.position and mark with an arrow pointing towards the gearbox. When the piston is cleaned, the arrow (1) becomes visible. This arrow faces towards the gearbox on all 4 cylinders and serves to ensure correct assembly of the pistons with offset centers.

Carefully pull off the cylinder. Support the piston by hand to avoid damaging piston and piston rings. Lift out the piston pin circlip (2) with a mono hook circlip puller (3), part no. 976380, see 00-00-00 sec. 10.6.

Fig. 72-84

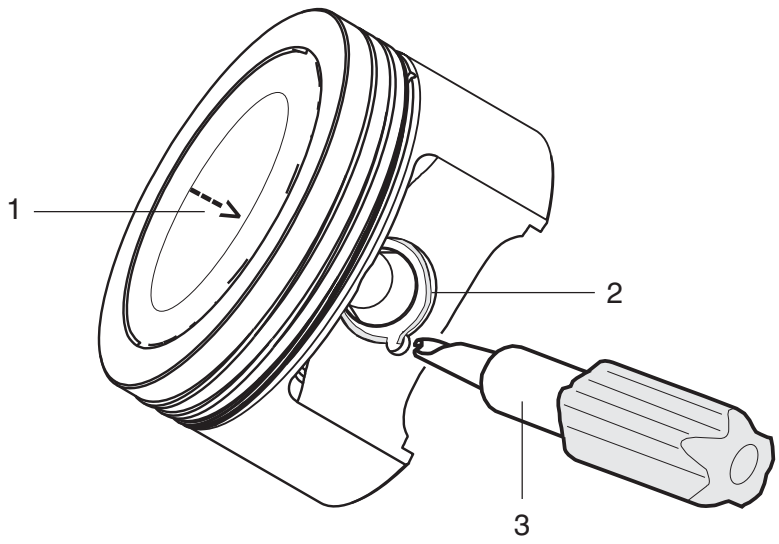

07708

d02622

Push out piston pin using installation tool, part no. 877016. If the piston pin is fitted too tightly, it can be pulled out using the piston pin extraction tool (4), part no. 877090, see 00-00-00 sec. 10.6. Insert the pullout spindle (5) into the piston pin (6) and screw on the nut (7). By turning the spindle clockwise, the piston pin is pulled from the conrod (8) into the extraction sleeve (9) until the piston (10) can be removed.

Remove nut (7) and extraction tool. Remove piston. Coordinate piston pin and piston with the respective cylinder.

Fig. 72-85

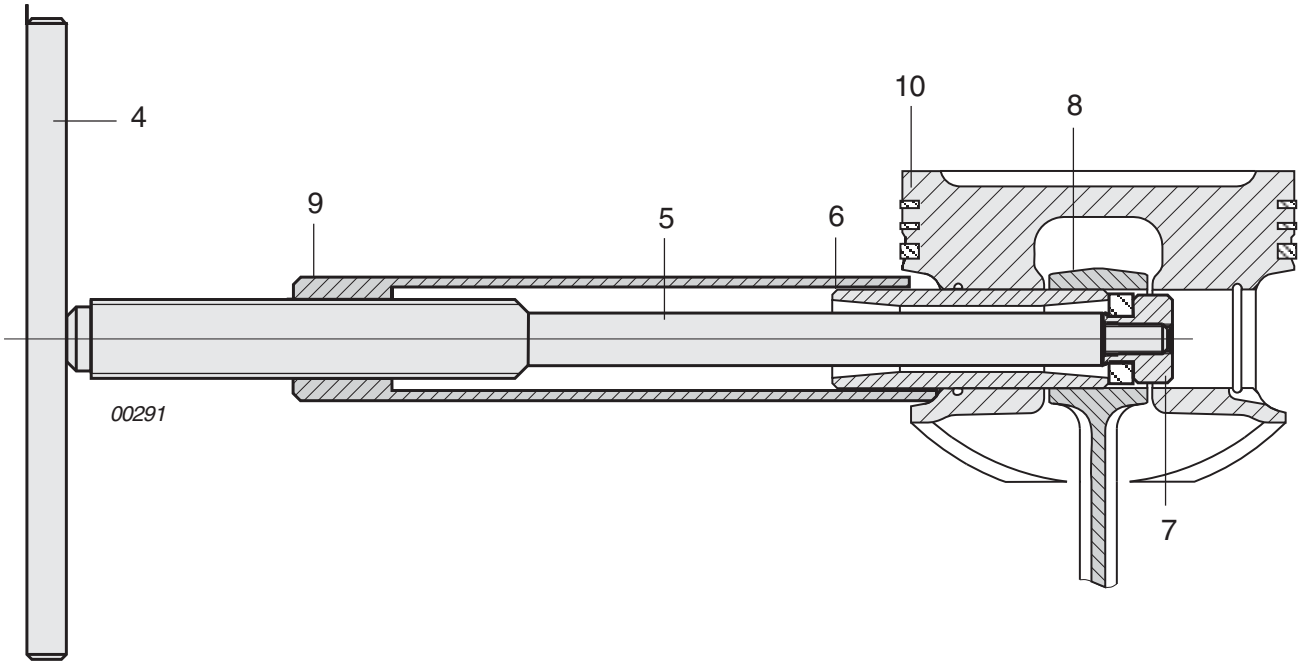

d02622

3.13.1) Checking pistons

See Figs. 72-86 and 72-87.

On engines of the 912/914 Series, light alloy full skirt cast pistons are used. The piston axis is offset by 1 mm (0.039 in.).

Remove piston rings using a pair of piston ring pliers. Make absolutely sure to re-fit rings in their initial position. Remove any oil carbon residue from piston rings and ring grooves. The best way to clean the groove root is by using a piece of a broken piston ring. Increased deposit is to be expected when using AVGAS 100LL. Remove carbon deposits from the piston crown.

Inspect and measure piston. Measure the cylinder and determine the permissible installation clearance in accordance with 00-00-00 sec. 9. If the determined installation clearance is greater than the permissible installation clearance, the piston and / or the cylinder must be replaced. See 72-00-00 sec. 4 and 00-00-00 sec. 9.

Check the groove (2) for the piston pin circlip. If any burrs are detected, carefully remove them. If the groove is excessively worn (> 0.3 mm = 0.012 in. than the retaining ring), replace piston.

There are 2 tolerance groups, red and green (piston marked with a red or greencolored dot). The difference between them is 0.01mm (0.0004 in.). The "red" piston is the smaller one. The nominal piston size is stamped on the piston crown. Oversize pistons are not available. The piston is supplied only complete with 3 rings.

Determine the diameter of the piston pin.
See 72-00-00 sec. 4.

With the rings (3) fitted on the piston, measure the flank clearance with a feeler gauge (4). See Fig. 72-87. Increased deposits in the tubular spring (see Fig. 72-89 (3)) of the oil scraper ring indicate that AVGAS 100LL has been used.

d02622

Fig. 72-86

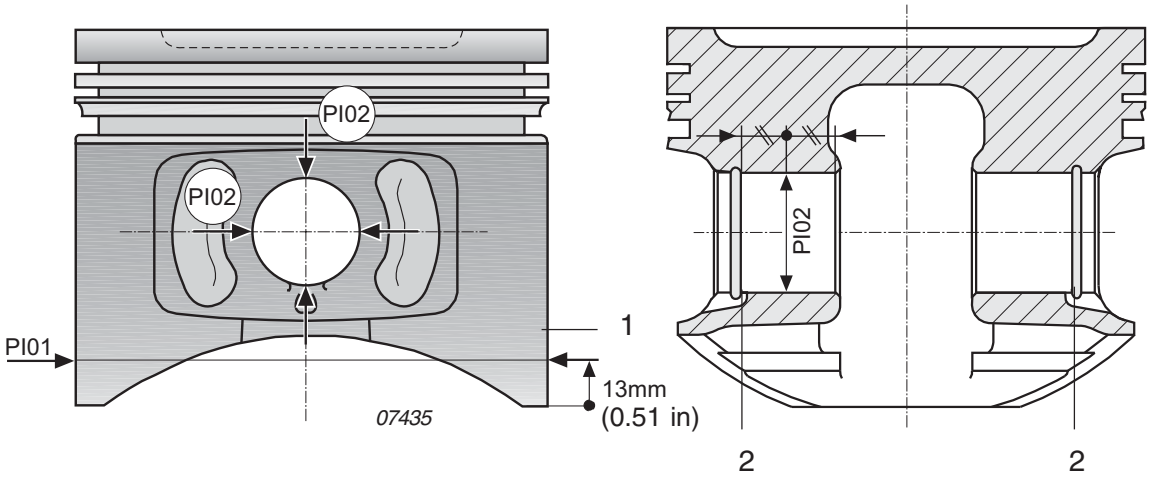

Fig. 72-87

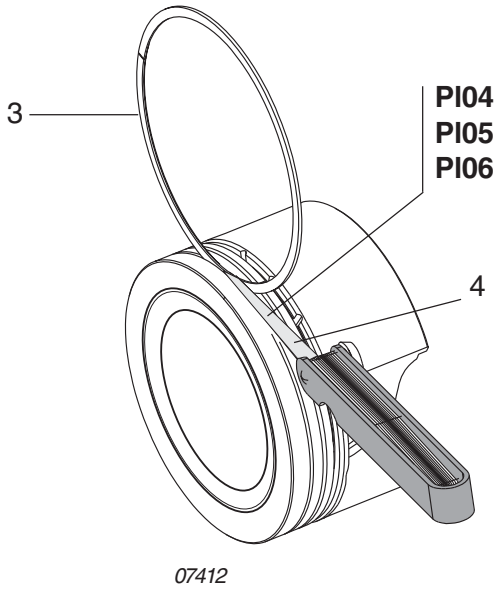

d02622

3.13.2) Checking the piston ring

See Figs. 72-88 and 72-89.

Check the end clearance of the cleaned piston rings.

To determine the end clearance (4), remove the piston rings from the piston using piston ring pliers, clean them and insert into the cylinder. Use a piston as pusher to align piston squarely in cylinder and approx. 10 mm (0.395 in.) from the top edge. The end clearance is measured using the feeler gauge (4), see dimension (PI07).

See 72-00-00 / 4.

By closely inspecting the ring surface (5), the portion of surface contact can be seen and indicates the wear. Install piston rings using piston ring pliers with the marking (6) "TOP" or the dot mark pointing upwards towards the piston crown.

Fig. 72-88

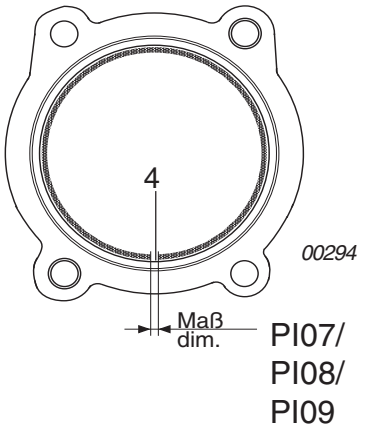

Fig. 72-89

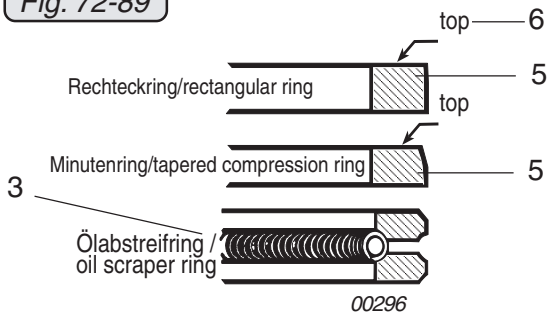

d04351

3.13.3) Piston pin

See Fig. 72-90

Measure piston pin and check for traces of seizure in area of con-rod seat. In case of distinct traces of seizure, replace piston pin even if dimensions are correct.

Measure dimension PI03.

See 72-00-00 sec. 4.

◆ NOTE: The circlips for axial piston pin retention must be used only once and must therefore be replaced.

Fig. 72-90

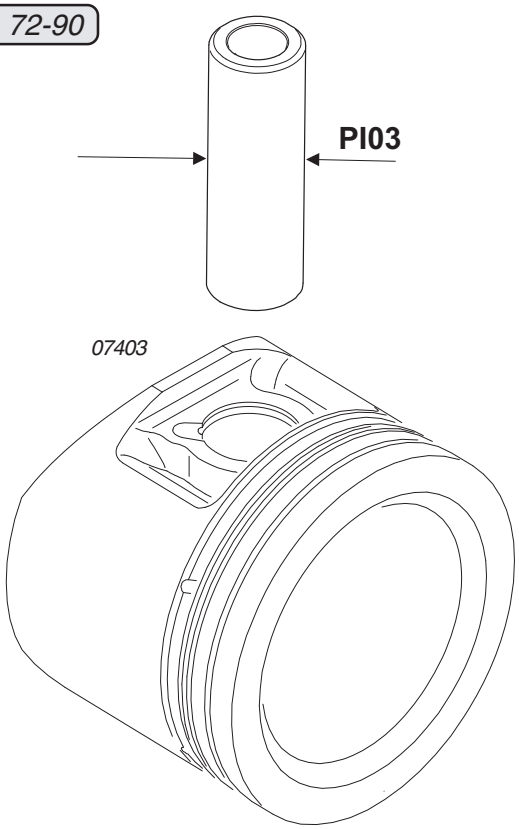

d04776

3.13.4) Cylinders inspection

See Figs. 72-91, 72-92 and 72-93.

The running surface of the cylinder is "NICKEL-SILICON"coated. All 4 cylinders are identical. Clean the cooling fins (1) of the cylinder. Remove oil carbon deposits from the top end (2) of the cylinder bore. Clean sealing surfaces on top (3) and bottom sides (4) and inspect cylinder.

Measure cylinder as shown in the following diagrams and enter the readings (CY01/CY02/CY03) in the corresponding form sheet. See 72-00-00 sec. 4.
Measure the installation clearance, see 72-00-00 sec. 3.13.1. If the wear limit for the cylinder has been reached, the cylinder and/or the piston must be replaced.

◆ NOTE: Slight oil carbon residues on the cylinder sealing surface (3) indicate leakage. True up the cylinder along with the cylinder head.

■ CAUTION : If the engine has been overheated, the hardness of the cylinder must be checked. The hardness is measured at control point CY04. See Fig. 72-93. See 72-00-00 sec. 5.1.

Procedure for hardness test:

CH08: HB2.5/62.5 DIN EN ISO 6506-2

d05737

Fig. 72-91

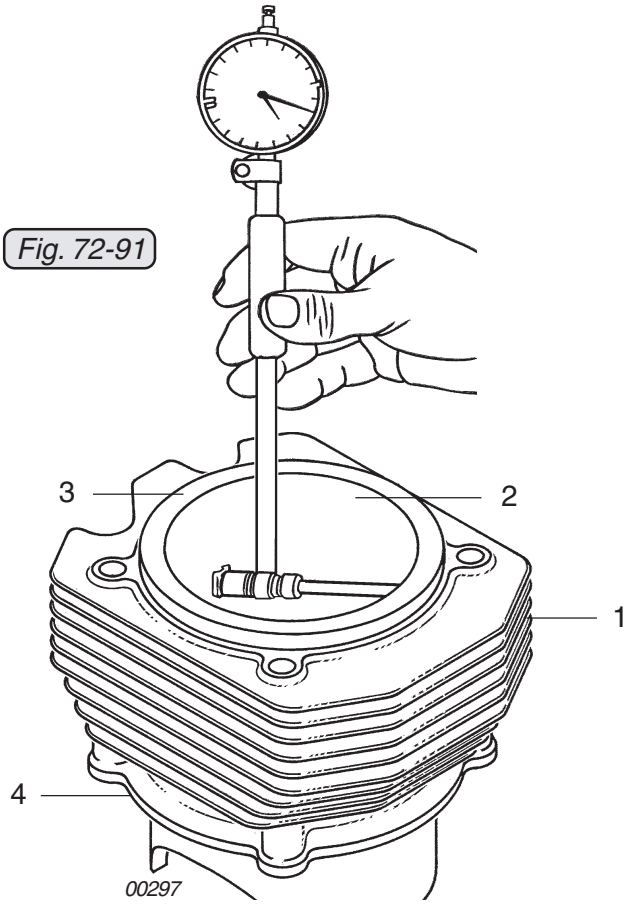

Fig. 72-92

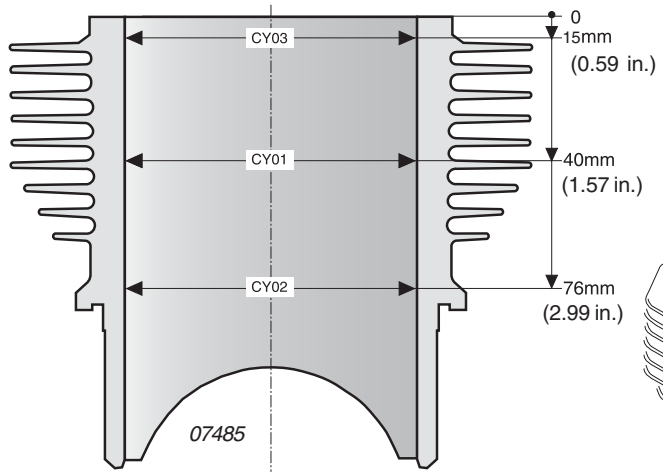

Fig. 72-93

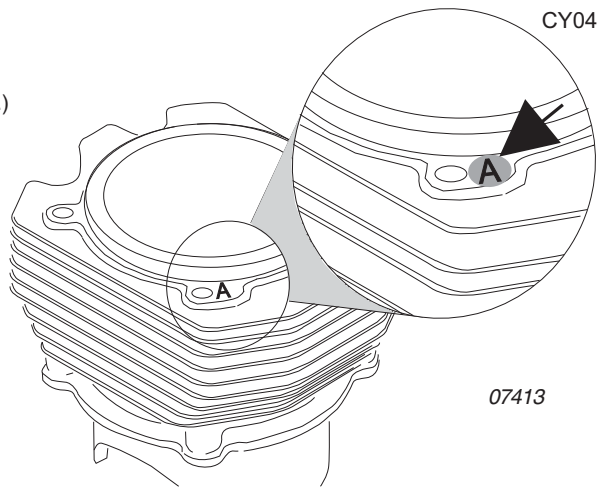

d05737

3.14) Hydraulic valve tappets

See Figs. 72-94, 72-95, 72-96 and 72-97.

Pull hydraulic valve tappets (1) out of the housing using the mono hook circlip puller (2), part no. 976380.

■ CAUTION : Never insert the puller into the retainer (3), but always into the groove in the hydraulic valve tappet. Inserting it into the retainer could cause the hydraulic valve tappet to fall apart. See Fig 72-94.

Lay hydraulic valve tappets aside, arranging them in a manner that ensures they will be refitted in their original place.

Carry out a visual inspection of the hydraulic valve tappets for damage and wear.

◆ NOTE: The hydraulic valve tappets rotate during engine operation, so the camshaft lobes (4) should be worn evenly.

Failure of a hydraulic valve tappet to rotate will result in uneven wear (2) on the contact surface (1). If there are irregular bright areas, fretting/pitting, the tappet must be replaced. See Fig. 72-97.

■ CAUTION: The cams of the camshaft can be visually inspected for damage after removing the hydraulic valves.

In the event of damage of the camshaft, the assy. engine block must be sent to a ROTAX authorized overhaul facility.

■ CAUTION : Taking apart hydraulic valve tappets is not allowed and not necessary.

■ CAUTION : In the event of malfunctions such as operation with un-purged hydraulic valve tappets, the components in the tappet (plate) are worn down.

■ CAUTION : If it is necessary to replace a hydraulic valve tappet, make sure that a tappet with a polished cam running surface (ROTAX part no. 881831) is used.

Depending on storage conditions, new hydraulic valve tappets are partially emptied and pump full of oil during engine startup. Oil enters the hydraulic valve tappet through the bore (5). The retaining ring (3) keeps the piston (6) in position when the hydraulic valve tappet is removed. See Fig. 72-95 and 72-96.

◆ NOTE: When putting into operation, observe SI-912-018 / SI-914-020 "Purging of lubrication system“, latest issue.

See 72-00-00 sec. 4.

d04776

Fig. 72-94

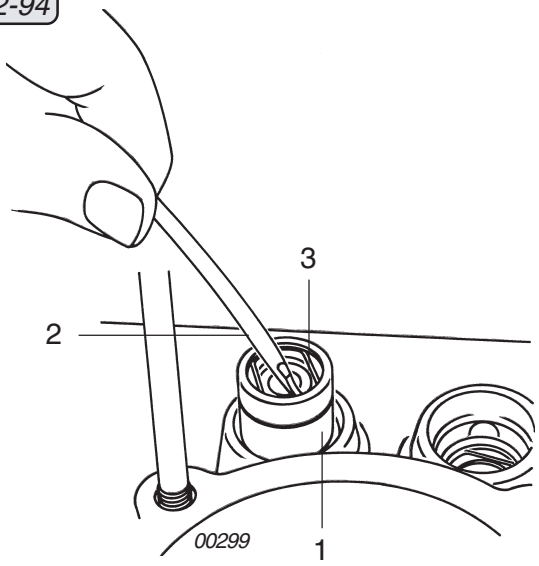

Fig. 72-95

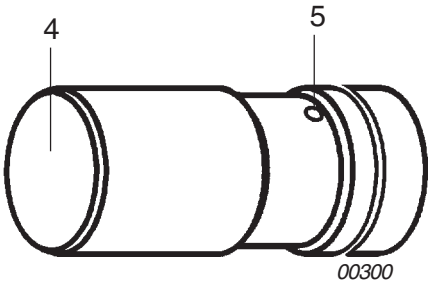

Fig. 72-96

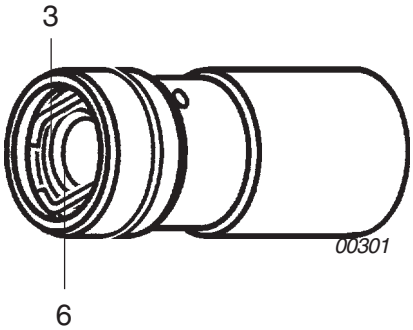

Fig. 72-97

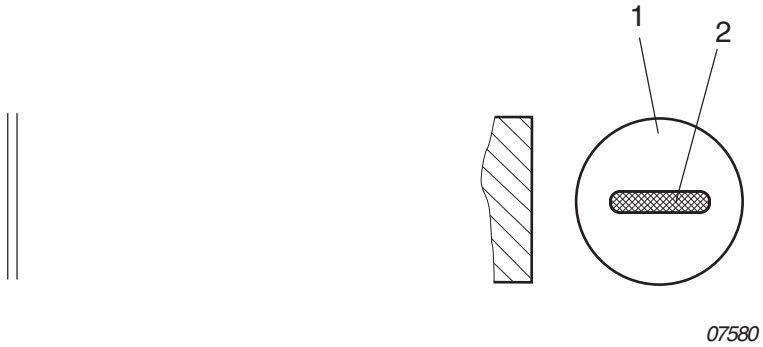

d04776

3.15) Pushrods

See Fig. 72-98.

Clean push-rods (1) and carry out a visual inspection. Make sure that the two ball heads (2) pressed into the rod fit tightly. Excessive engine speed may have caused bending of the pushrods. Roll push-rods and check for run out, dimension (VT09). Lube oil from the hydraulic valve tappet passes to the rocker arm through the bore (3).

See 72-00-00 sec. 4.

Fig. 72-98

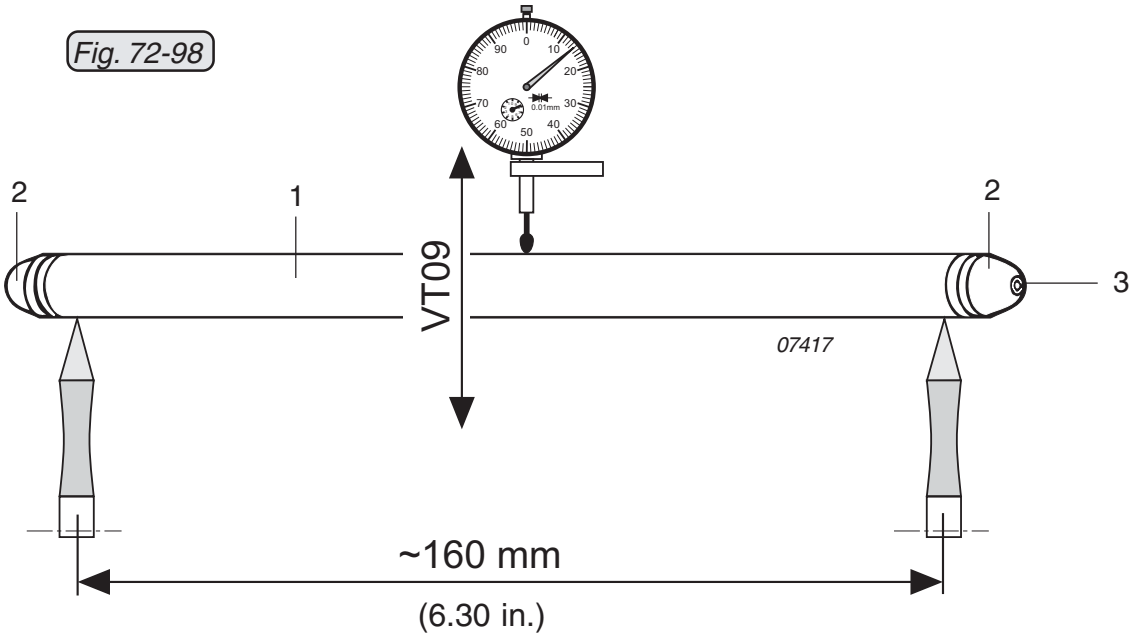

d02622

3.16) Piston and cylinder assembly fitting

3.16.1) Hydraulic valve tappets fitting

Lubricate bearing bore for hydraulic valve tappets in crankcase. Apply LOCTITE Anti-Seize to the contact surfaces of the hydraulic valve tappets, lubricate their circumference and insert them into the crankcase according to the recorded position . The hydraulic valve tappet must be able to turn in the crankcase without resistance.

3.16.2) Pistons fitting

See Figs. 72-99, 72-100, 72-101, 72-102, 72-103 72-104 and 72-105.

The piston pin center is offset from the piston center. During installation of the piston, the arrow (1) on the piston crown must point toward the propeller shaft. This means that on cylinders **1** and **3**, the offset (narrower side (2)) faces downwards, while on cylinders **2** and **4**, the offset (narrower side (3)) faces upwards.

Install the piston as shown on Fig. adjacent the offset of the piston pin bore is 1 mm (0.039 in.).

If the arrow (1) on the piston crown is no longer visible, the piston must be measured to determine the correct pin offset. See fig. 72-99/72-100.

Fig. 72-99

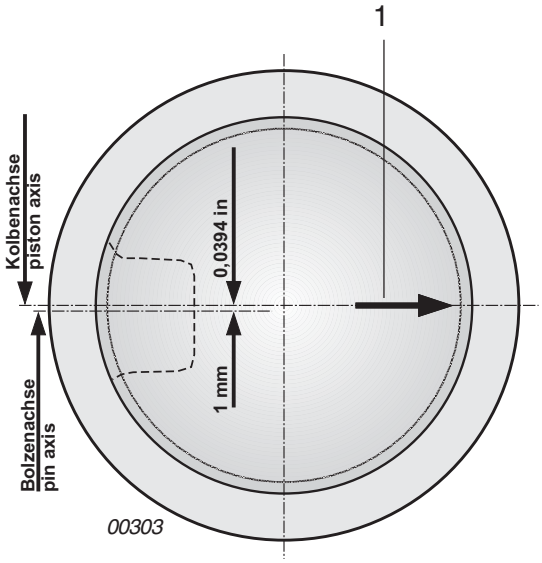

Fig. 72-100

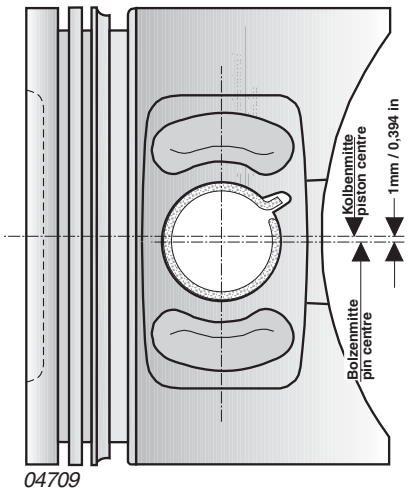

d04776

Fig. 72-101

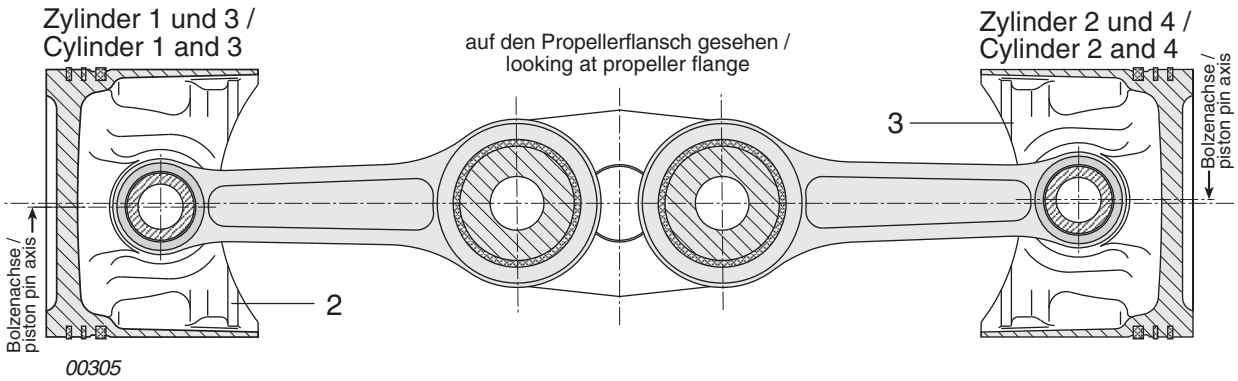

Oil the entire length of the piston pin (4). The connecting rod eye (5) and the piston pin bore (6) are also oiled. Insert piston pin with guide punch, part no. 877802 (slide fit).

If this is not possible, the piston pin can be pulled in with the piston pin tool (7), part no. 877091. Insert piston pin into one side of the piston bore, insert spindle of installation tool (8) and fit nut (9). Turning the spindle clockwise draws the piston pin in completely, up to the retaining groove (10).

Fig. 72-102

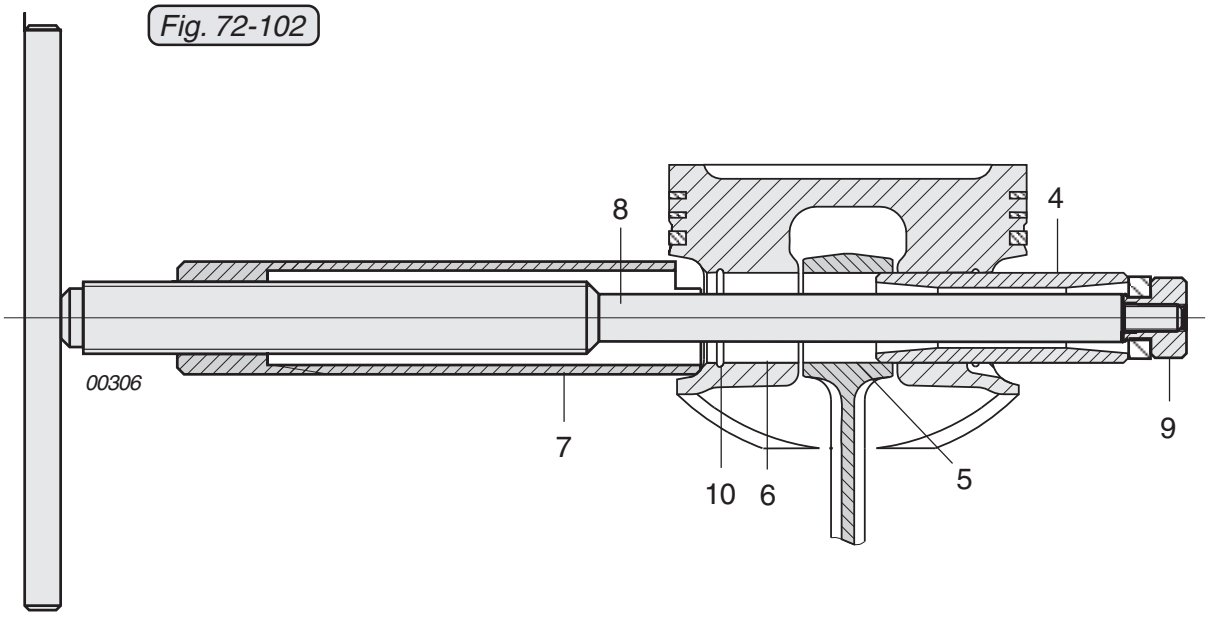

■ CAUTION: Always use new mono hook circlips! Used retaining rings or retaining rings which have already been fitted have too little tangential tension, can twist and thus wear the groove in the piston.

Fit piston pin circlip with installation tool, part no. 877802. To do so, press the mono hook circlip (11) into the groove (14) of the mounting sleeve (13) and push guide punch (12) into the mounting sleeve. Slide mounting sleeve onto the installation tool.

■ CAUTION : The position of the mono hook circlips is dictated by the recess on the piston. When assembled, the open side of the mono hook circlip must be positioned opposite the piston crown. See Fig. 72-100.

Push installation tool (15) into the positioning gauge and press the ring towards the front as far as the stop. Now position the complete installation tool (15) on the piston. Support piston with hand and exert strong pressure on the installation tool to push the mono hook circlip (11) into the groove (16) of the piston. Apply same procedure on the opposite side of the piston.

◆ NOTE: Old style pistons (17) are made for hookless circlips, the mono hook circlip must be reworked as described in SI-21-1997 “Introduction of the mono hook circlip“, latest issue. See Fig. 72-105.

Fig. 72-103

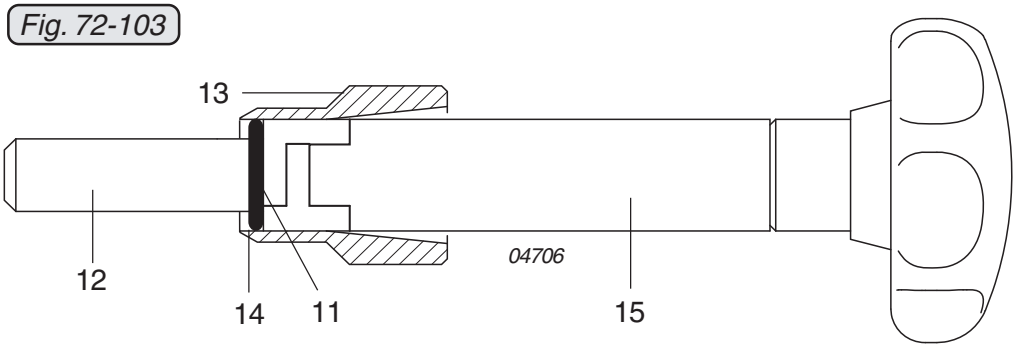

d04776

Fig. 72-104

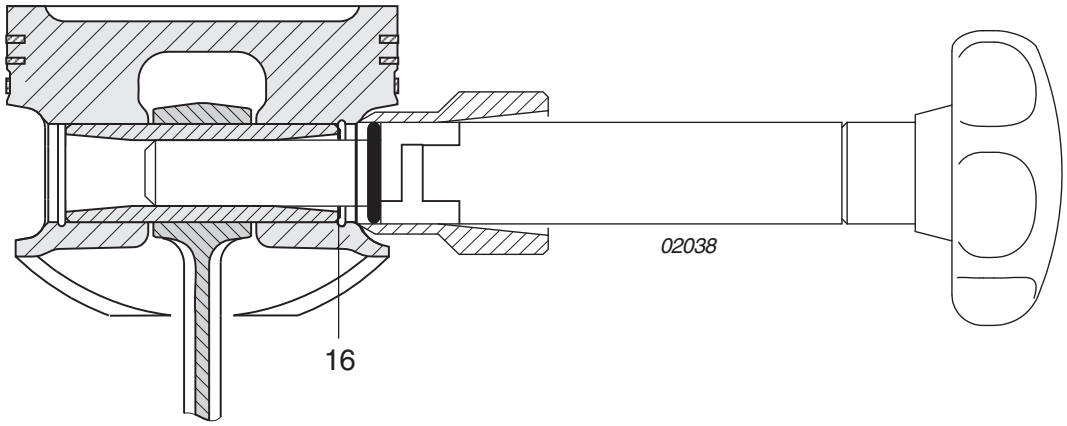

Fig. 72-105

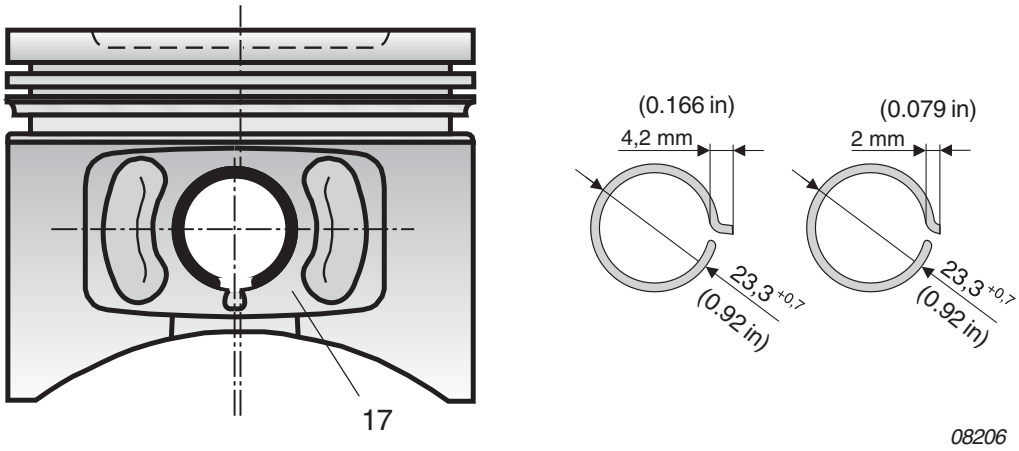

d02622

3.16.3) Cylinders fitting

See Fig. 72-106.

Place O-ring 87x2 on the cylinder skirt and oil the cylinder wall.

◆ NOTE: On engines with crankcases bearing serial numbers up to S/N 27811, there is an O-ring 87x2 fitted to depress stud bolt M8x297. This O-ring is not fitted on housing with serial numbers above S/N 06.0010.

◆ NOTE: In case of oil leakages in the area of the cylinder barrel a repair solution from crankcase S/N 06.0010 was created. See SI-912-019/SI-914-021 “Oil leakages in the area of the cylinder barrel”, latest issue.

■ CAUTION : To prevent breakage to the piston rings, the appropriate piston ring retainer, part no. 876978 or 876967 must be used. The gaps in the rings (2) and (3) must be positioned in the prescribed angle range. See Fig. 72-106.

Pay attention to the position of the piston ring gaps (4). The gap in the first piston ring (1) should be positioned in the center of the bottom piston skirt. The ring gap in the second piston ring (2) and the gap in the oil scraper ring (3) should be inclined away from the center of the top piston skirt at an angle of between 25° and max. 30°. See Fig. 72-106.

■ CAUTION : The ring gap should never be in the area of the piston pin bore.

■ CAUTION : Check twice whether the piston pin circlips are installed as prescribed.

Lubricate piston, compress piston rings with piston ring retainer and carefully fit the coordinated cylinder. Proceed in the same way for the other cylinders.

d04351

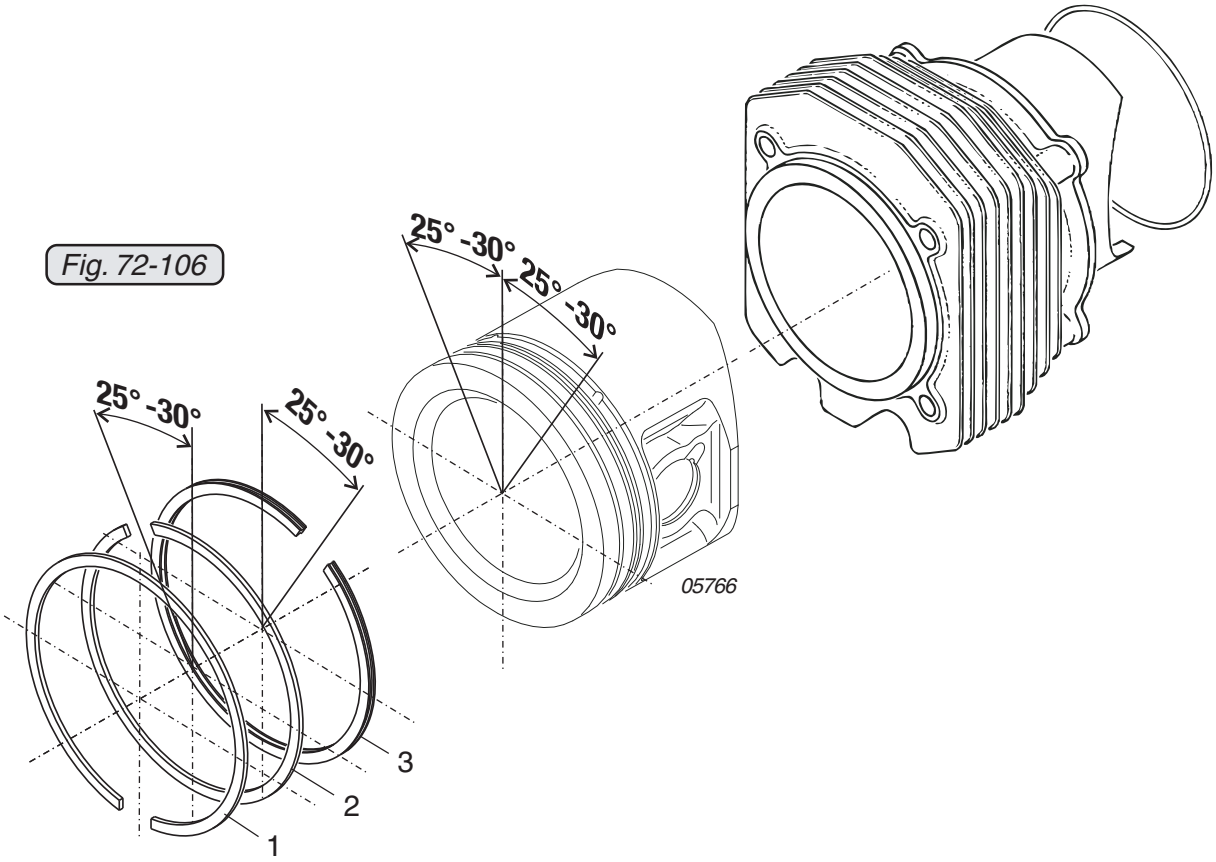

Fig. 72-106

d02622

3.16.4) Cylinder head fitting

See Figs. 72-107, 72-108, 72-109 and 72-110.

Install respective pushrods (1) in both oil return tubes on the pre-assembled cylinder head and place pre-oiled O-ring (2) 16x5 on oil return tube (3).

■ CAUTION : Adjust the piston of the cylinder head that should be assembled on OT. This avoids that the valves are “open” and due to the valve springs the cylinder head rises back up and the O-rings of the oil return lines slip out and are clamped.

Fit cylinder head until the O-rings (2) on both oil return tubes rest in the crankcase (4). Now lift cylinder (5) until the centering (6) of the cylinder engages in the cylinder head recess.

◆ NOTE: This is a safety measure to prevent jamming of cylinder head resulting in leakage.

◆ NOTE: On engines of older design, washers (12) are fitted on the hex. nuts M8. Recent findings show that it is no longer necessary to fit these washers. These washers are therefore not necessary when fitting a new cylinder head.

Fit cylinder head and cylinder together on crankcase. First, slightly tighten the cylinder head with 2 collar cap nuts M8 and 2 hex. nuts M8 crosswise. Ensure that the O-rings (2) are squeezed evenly into the crankcase.

Repeat this procedure on the other cylinder heads.

Attach cylinder aligning tool (8), part no. 877262, to the intake flange of the cylinder heads (10) with 4 allen screws (9) M6x25. Align cylinder heads, thus warranting a flat support for intake manifold. Screw on collar cap nut and flanged nut (11) with washer (12) and tighten cylinder heads in the order shown in Fig.72-108. Tighten to 10 Nm (90 in.lb) and then in addition tighten further by applying a 120° rotation. Remove 4 allen screws (9) and cylinder aligning tool.

◆ NOTE: If cylinder stud heads are damaged or if the cylinder baffle clearance is too tight then the cylinder head studs have to be replaced.

d05737

Lubricate all moving parts in rocker arm compartment. Place O-ring (13) 105x2.5 and O-ring (14) 6.4x1.8 in the valve cover (15).

Fit valve cover and tighten with allen screw (16) M6x30 and washer (17) to a tightening torque of 10 Nm (90 in.lb).

■ CAUTION : On the outer contour, there must be a gap of at least 0.2 mm (0.008 in.) between the valve covers. The valve covers must not touch each other.

■ CAUTION : Never change the length of the valve cover screw! Check whether threads are damaged. If this screw is loose or if the valve cover is leaking, the oil return to the oil tank by "blow-by gas" will not work at all or only insufficiently.

Screw in spark plugs and tighten to 20 Nm (180 in.lb). Fit spark plug connectors on spark plugs according to the coding sleeves, see 74-00-00 sec. 3.4.

◆ NOTE: Proceed as per Wiring Diagram. See 74-00-00 sec. 3.13.

Fig. 72-107

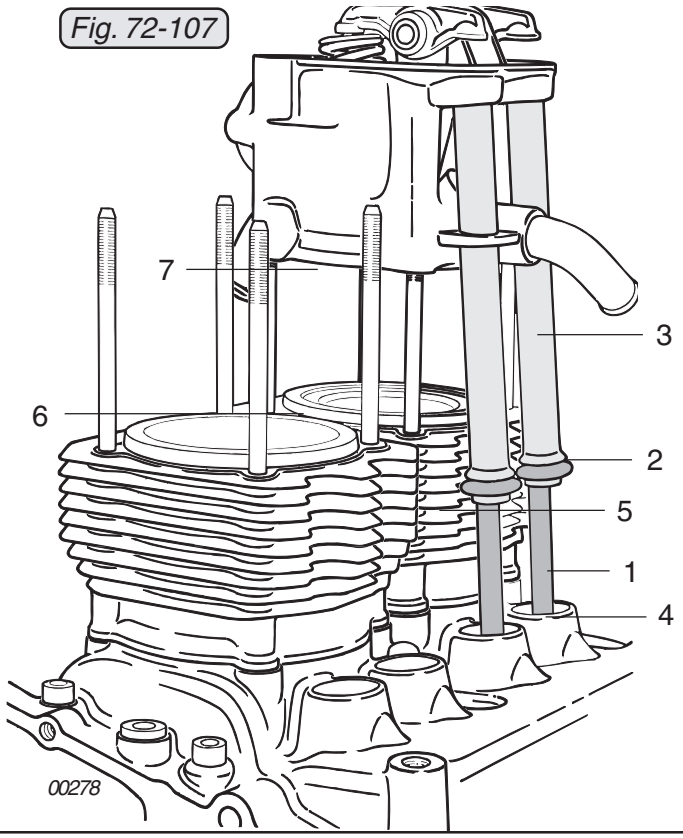

d05737

Fig. 72-108

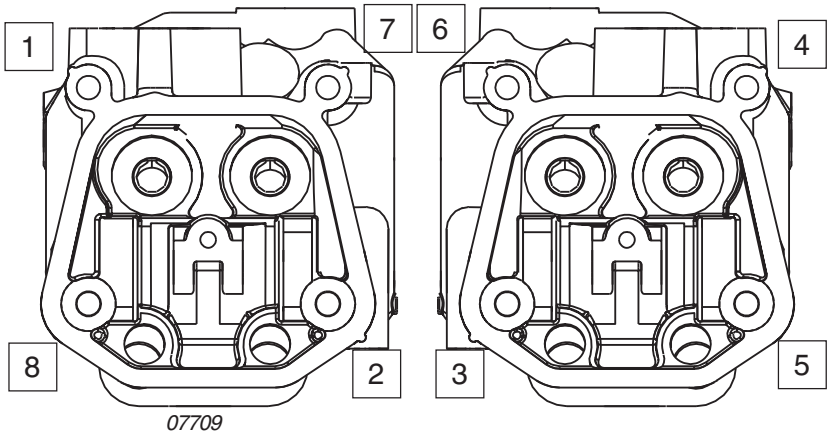

Fig. 72-109

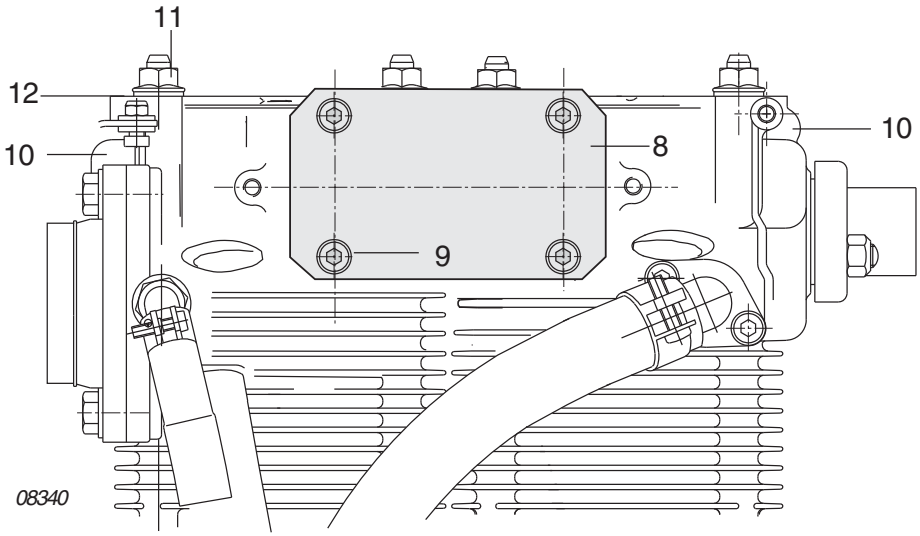

Fig. 72-110

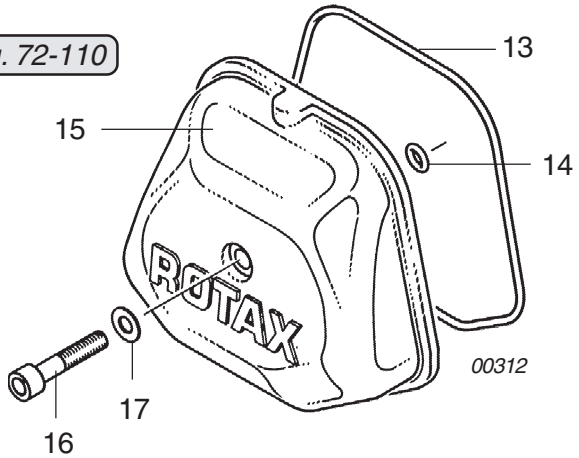

d02622

3.17) Intake manifold inspection and compensation tube assembly

See Fig. 72-111

Check the angular tube (1) screwed into the intake manifold for cracks and tight fit, replace if necessary.

◆ NOTES: Mark the position of the angular tube with a suitable pen (touchup pen).

Remove the angular tube. Clean threads, apply MOLYKOTE G-N to both angular tubes and fit them into position with at least 5 turns.

Attach compensation tube (2) and the resonator hoses (3) (long hose on cylinder side 2/4) on both ends with screw hose clamps (4). The clip (5) serves to hook in the carburetor support spring. See 73-00-00 sec. 3.5.

Fig. 72-111

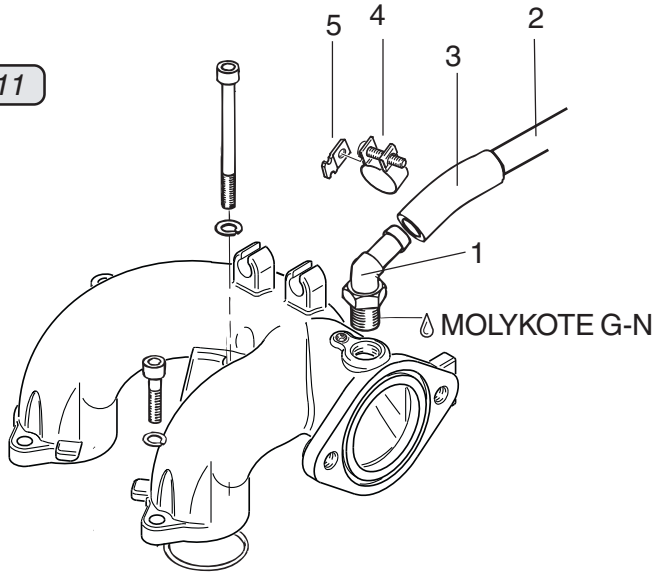

08453

3.18) Crankshaft inspection

Measure the crankshaft (CS04, CS05, CS07 und CS24). See 72-00-00 sec. 4. In the case of deviation, the whole assy. engine block must be sent to an ROTAX authorized overhaul facility.

d04351

NOTES

d02622

4) Wear limits

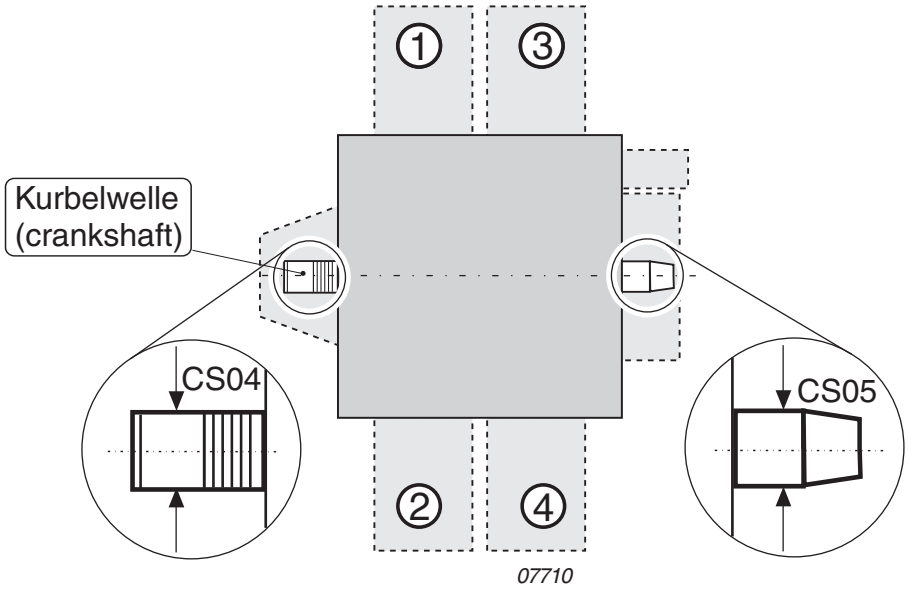

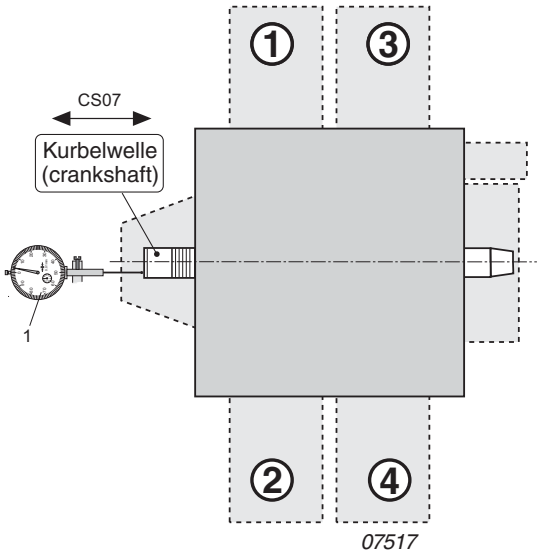

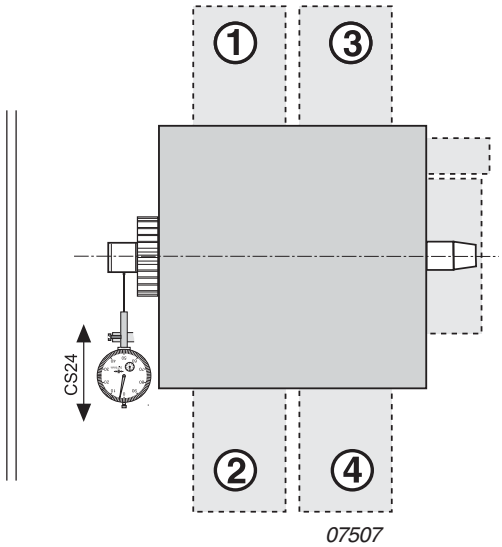

d05737

Description	Code	Reading new		wear limit	wear limit		Readings
		min	max	100%	50%		
Crankshaft							
Journal at power take off end (S1)	CS04	27,99	28,00	27,95	27,97	actual	
		1,1020	1,1024	1,1004	1,1012	renewed	
Journal at magneto side (S2)	CS05	31,99	32,00	31,95	31,97	actual	
		1,2594	1,2598	1,2579	1,2587	renewed	
Crankshaft axial clearance	CS07	0,08	0,32	0,50	0,41	actual	
		0,0031	0,0126	0,0197	0,0161	renewed	
Crankshaft out of round assembled in crankcase, drive gear mounted	CS24	0,000	0,060	0,080		actual	
		0,0000	0,0024	0,0031		renewed	
Crankshaft distortion	GB20			2°		actual	
						renewed	

08748

d04776

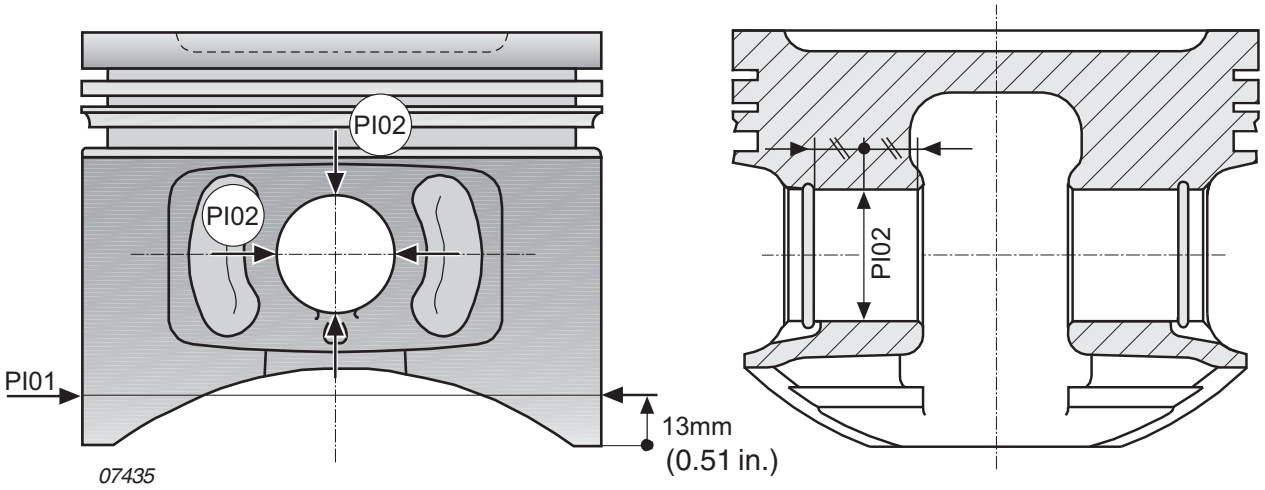

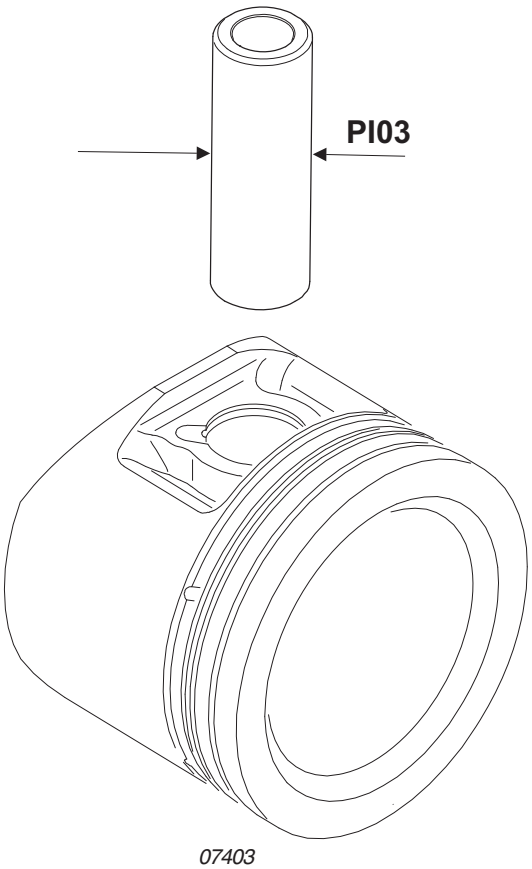

d02622

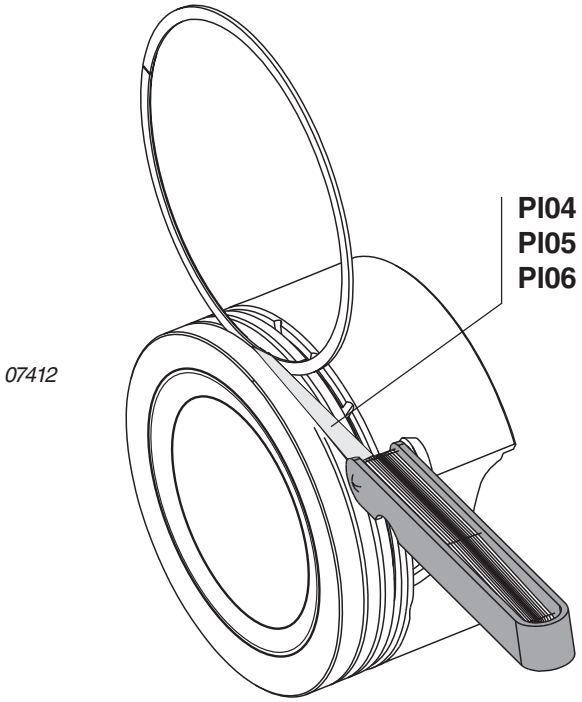

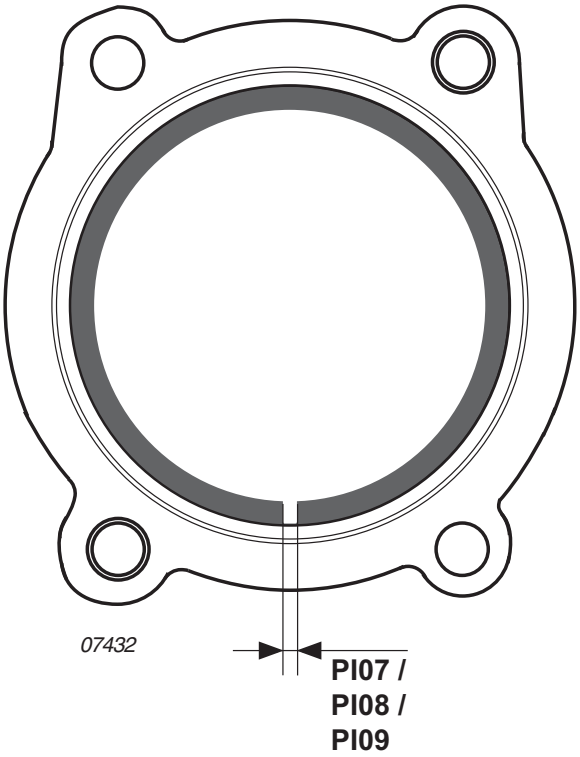

d02622

Description	Code	Reading new		wear limit	wear limit		Readings 07221			
		min	max	100%	50%					
Piston										
							Cyl. 1	Cyl. 2	Cyl. 3	Cyl. 4
Piston red 79,5 mm / 3,1 in.	PI01	**79,488**	**79,502**	**79,390**	**79,439**	actual				
		3,1294	3,1300	3,1256	3,1275	renewed				
Piston green 79,5 mm / 3,1in.	PI01	**79,498**	**79,512**	**79,390**	**79,444**	actual				
		3,1298	3,1304	3,1256	3,1277	renewed				
Piston red 84mm / 3,3 in.	PI01	**83,988**	**84,002**	**83,890**	**83,939**	actual				
		3,3066	3,3072	3,3027	3,3047	renewed				
Piston green 84mm / 3,3 in.	PI01	**83,998**	**84,012**	**83,890**	**83,944**	actual				
		3,3070	3,3075	3,3027	3,3049	renewed				
Clearance cyl. A with Piston “red”	CY01/ PI01	**0,002**	**0,024**	**0,130**	**0,076**	actual				
		0,0001	0,0009	0,0051	0,0030	renewed				
Clearance cyl. B with Piston “green”	CY01/ PI01	**0,002**	**0,026**	**0,130**	**0,077**	actual				
		0,0001	0,0010	0,0051	0,0031	renewed				
Piston pin bore	PI02	**20,001**	**20,005**	**20,040**	**20,023**	actual				
		0,7874	0,7876	0,7890	0,7883	renewed				
Piston pin	PI03	**19,992**	**19,995**	**19,970**	**19,981**	actual				
		0,7871	0,7872	0,7862	0,7867	renewed				

d05737

Description	Code	Reading new		wear limit	wear limit		Readings 07221			
		min	max	100%	50%					
Piston										
							Cyl. 1	Cyl. 2	Cyl. 3	Cyl. 4
Pison pin clearance in piston pin bore	PI02/ PI03	**0,006** 0,0002	**0,013** 0,0005	**0,050** 0,0020	**0,032** 0,0012	actual				
						renewed				
Piston pin clearance in con rod	CS06/ PI03	**0,015** 0,0006	**0,035** 0,0014	**0,050** 0,0020	**0,043** 0,0017	actual				
						renewed				
Piston ring groove clearance rectangu-lar ring 1	PI04	**0,030** 0,0012	**0,062** 0,0024	**0,100** 0,0039	**0,081** 0,0032	actual				
						renewed				
Piston ring groove clearance tapered compression ring 2	PI05	**0,030** 0,0012	**0,062** 0,0024	**0,100** 0,0039	**0,081** 0,0032	actual				
						renewed				
Piston ring groove clearance oil scraper ring 3	PI06	**0,020** 0,0008	**0,055** 0,0022	**0,100** 0,0039	**0,078** 0,0031	actual				
						renewed				
Piston ring end gap rectangular ring 1	PI07	**0,15** 0,0059	**0,35** 0,0138	**1,00** 0,0394	**0,68** 0,0266	actual				
						renewed				
Piston ring end gap tapered compres-sion ring 2	PI08	**0,15** 0,0059	**0,35** 0,0138	**1,000** 0,0394	**0,68** 0,0266	actual				
						renewed				
Piston ring end gap oil scraper ring 3	PI09	**0,15** 0,0059	**0,40** 0,0157	**1,00** 0,0394	**0,70** 0,0276	actual				
						renewed				

d04351

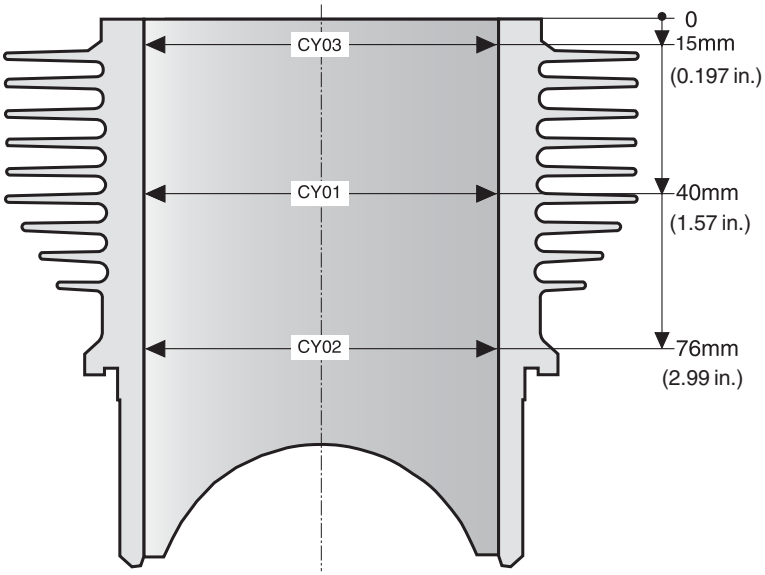

07485

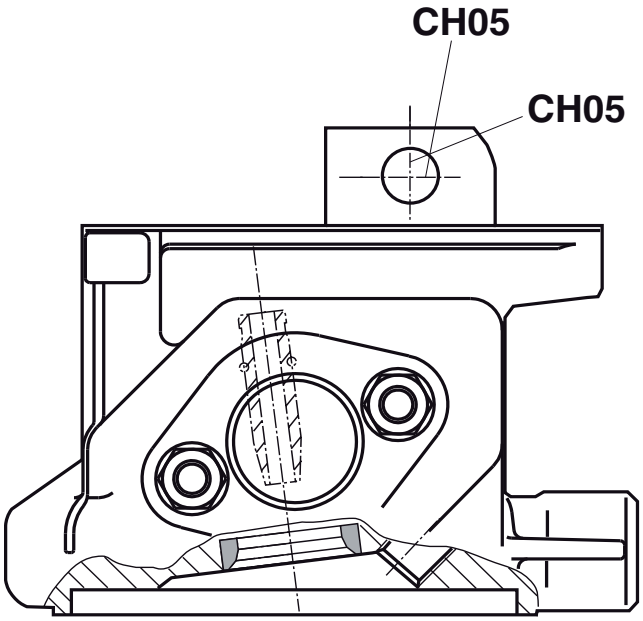

07831

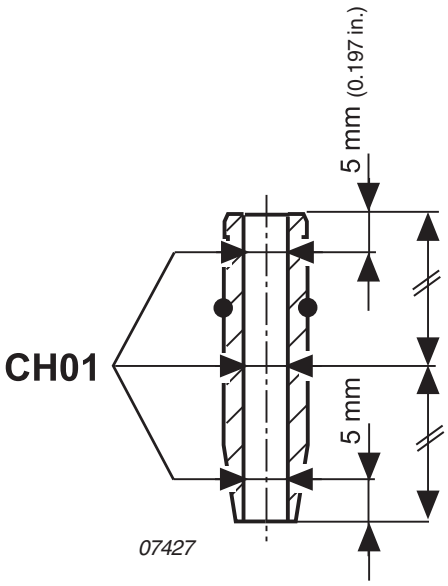

07427

d05737

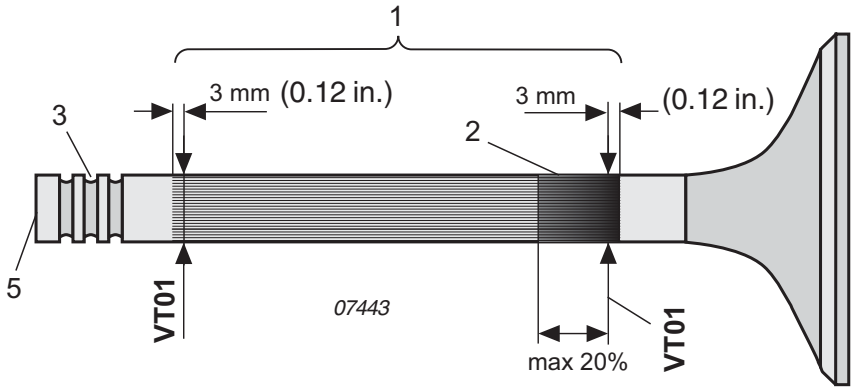
1
3 mm (0.12 in.)
3 mm
(0.12 in.)
3
2
5
VT01
07443
max 20%
VT01

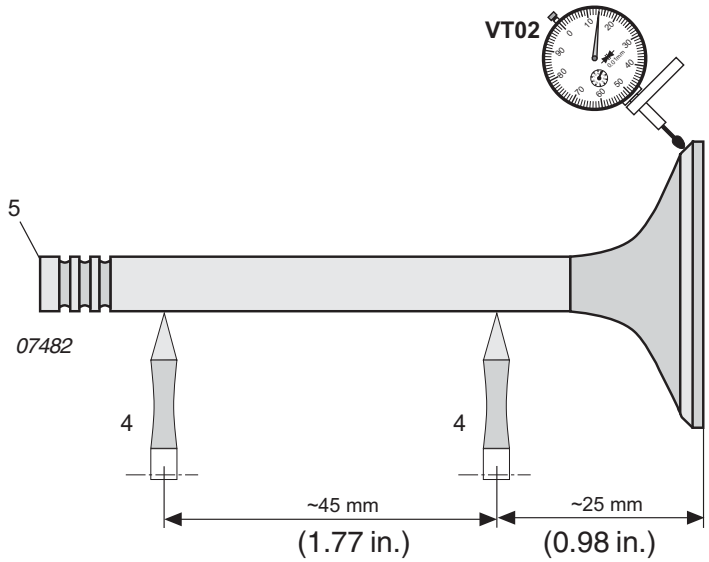
VT02
5
07482
4
4
~45 mm
(1.77 in.)
~25 mm
(0.98 in.)

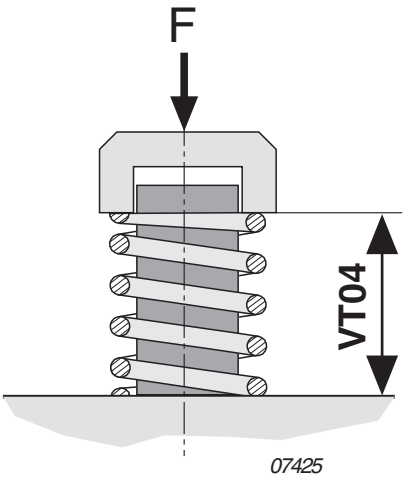
F
VT04
07425

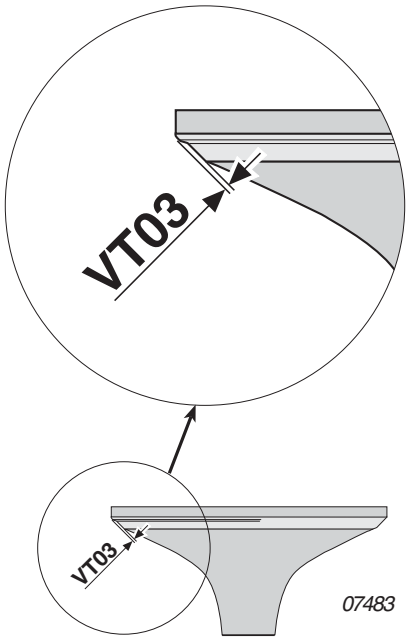
VT03
VT03
07483

d02622

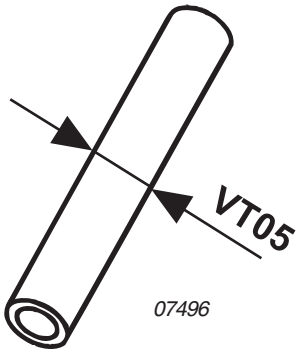
VT05
07496

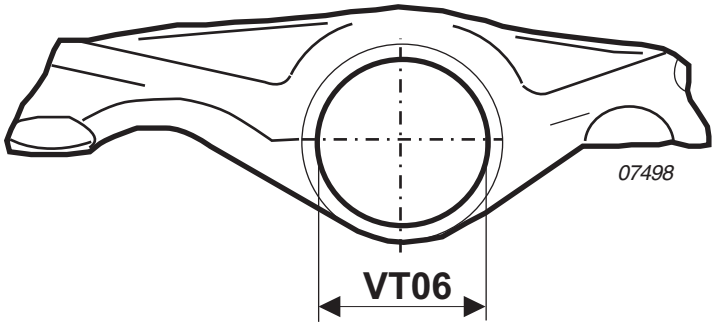
07498
VT06

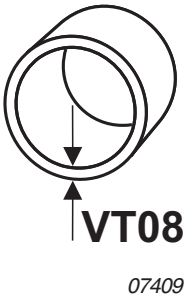
VT08
07409

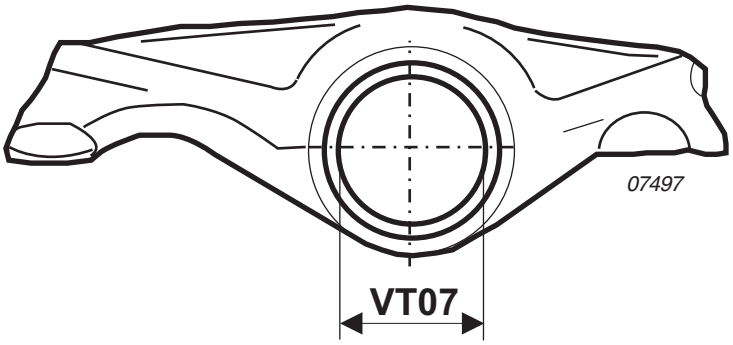
07497
VT07

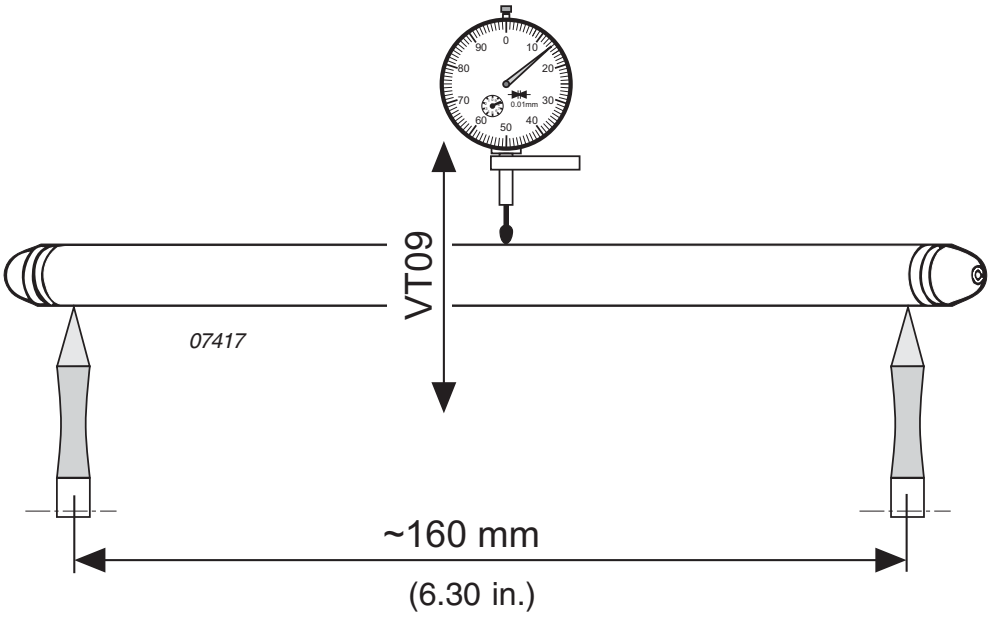
VT09
07417
~160 mm
(6.30 in.)

d02622

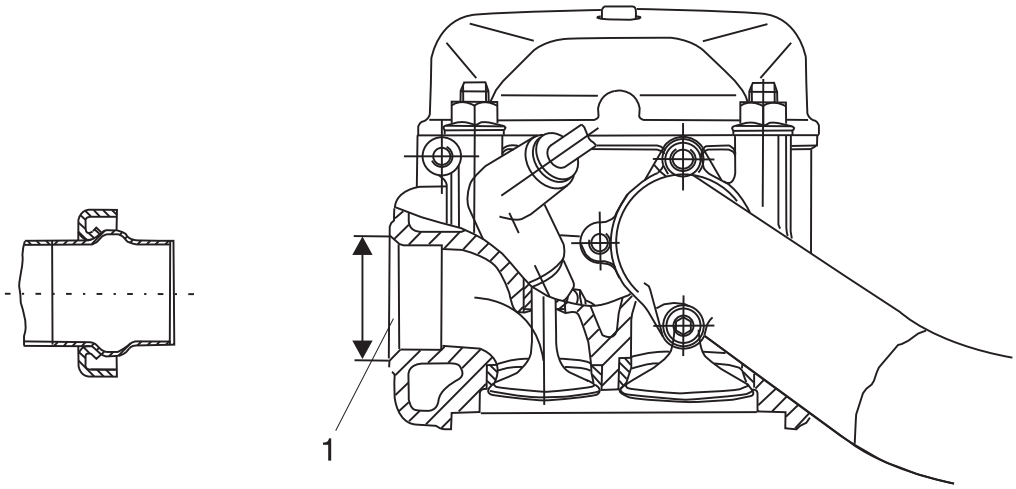

08207

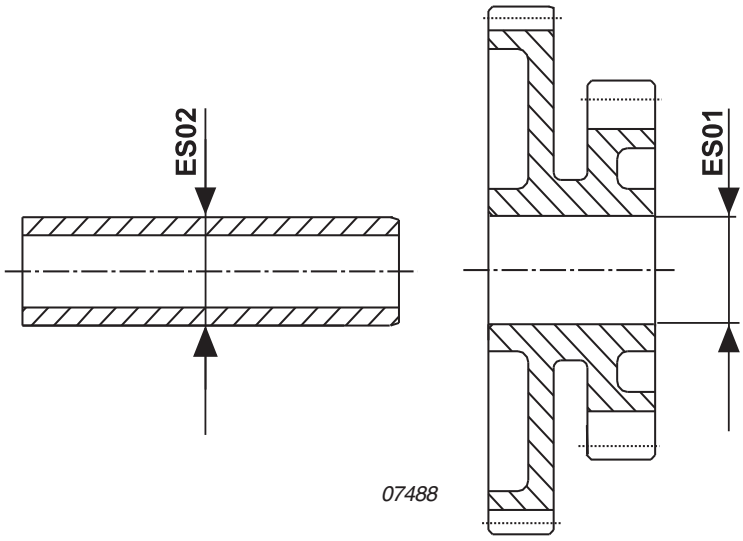

07488

d04776

Description		Code	Reading new min	Reading new max	wear limit 100%	wear limit 50%		Readings 07222			
Cylinder											
								Cyl. 1	Cyl. 2	Cyl. 3	Cyl. 4
Cylinderbore A 79,5 mm / 3,1 in.	(D1)	CY01	**79,500**	**79,512**	**79,580**	**79,546**	actual				
			3,1299	3,1304	3,1331	3,1317	renewed				
	(D2)	CY02	**CY01 + 0,015**		**CY01 +0,015/-0,008**		actual				
			CY01 +0,0006		CY01 +0,0006/ -0,0003		renewed				
	(D3)	CY03	**CY01 +/- 0,008**		**CY01 +0,020/-0,008**		actual				
			CY01 +/- 0,0003		CY01 +0,0008/ -0,0003		renewed				
Cylinderbore B 79,5 mm / 3,1 in.	(D1)	CY01	**79,512**	**79,524**	**79,590**	**79,566**	actual				
			3,1304	3,1316	3,1335	3,1325	renewed				
	(D2)	CY02	**CY01 + 0,015**		**CY01 +0,015/-0,008**		actual				
			CY01 +0,0006		CY01 +0,0006/ -0,0003		renewed				
	(D3)	CY03	**CY01 +/- 0,008**		**CY01 +0,020/-0,008**		actual				
			CY01 +/-0,0003		CY01 +0,0008/ -0,0003		renewed				
Cylinderbore A 84 mm / 3,3 in.	(D1)	CY01	**84,000**	**84,012**	**84,080**	**84,046**	actual				
			3,3071	3,3075	3,3102	3,3089	renewed				
	(D2)	CY02	**CY01 + 0,015**		**CY01 +0,020/-0,008**		actual				
			CY01 +0,0006		CY01 +0,0006/ -0,0003		renewed				
	(D3)	CY03	**CY01 +/- 0,008**		**CY01 +0,020/-0,008**		actual				
			CY01 +/-0,0003		CY01 +0,0008/ -0,0003		renewed				
Cylinderbore B 84 mm / 3,3 in.	(D1)	CY01	**84,012**	**84,024**	**84,090**	**84,057**	actual				
			3,3075	3,3080	3,3106	3,3093	renewed				
	(D2)	CY02	**CY01 + 0,015**		**CY01 +0,015/-0,008**		actual				
			CY01 +0,0006		CY01 +0,0006/ -0,0003		renewed				
	(D3)	CY03	**CY01 +/- 0,008**		**CY01 +0,020/-0,008**		actual				
			CY01 +/-0,0003		CY01 +0,0008/ -0,0003		renewed				
Cylinderovality			**0,0000**	**0,007**	**0,050**	**0,029**	actual				
			0,0000	0,0003	0,0020	0,0011	renewed				
Cylindertaper			**0,0000**	**0,030**	**0,060**	**0,045**	actual				
			0,0000	0,0012	0,0024	0,0018	renewed				
Rework of sealing surface Cylinder/Cylinder head			**0,0000**	**0,0000**	**0,10**		actual				
			0,0000	0,0000	0,0039		renewed				

d05737

Description		Code	Reading new min	Reading new max	wear limit 100%	wear limit 50%		Readings 09475 Cyl. 1	Cyl. 2	Cyl. 3	Cyl. 4
Cylinder head											
Valve guide bore inner diameter	Int. V.	CH01	7,006	7,018	7,150	7,084	actual				
			0,2758	0,2763	0,2815	0,2789	renewed				
	Exh. V.	CH01	7,006	7,018	7,150	7,084	actual				
			0,2758	0,2763	0,2815	0,2789	renewed				
Valve seat width	Int. V.	CH02	1,40	1,90	2,40	2,15	actual				
			0,0551	0,0748	0,0945	0,0846	renewed				
	Exh. V.	CH02	1,50	2,00	2,50	2,25	actual				
			0,0591	0,0787	0,0984	0,0886	renewed				
Valve stem diameter	Int. V.	VT01	6,965	6,980	6,940	6,953	actual				
			0,2742	0,2748	0,2732	0,2737	renewed				
	Exh. V.	VT01	6,965	6,980	6,940	6,953	actual				
			0,2742	0,2748	0,2732	0,2737	renewed				
Valve stem clearance	Int. V.	CH01/ VT01	0,026	0,053	0,150	0,102	actual				
			0,0010	0,0021	0,0059	0,0040	renewed				
	Exh. V.	CH01/ VT01	0,026	0,053	0,150	0,102	actual				
			0,0010	0,0021	0,0059	0,0040	renewed				
Out of round of valve head	Int. V.	VT02	0,00	0,03	0,04	0,035	actual				
			0,0000	0,0012	0,0016	0,0014	renewed				
	Exh. V.	VT02	0,00	0,03	0,04	0,035	actual				
			0,0000	0,0012	0,0016	0,0014	renewed				

d04776

Description		Code	Reading new		wear limit	wear limit		Readings 07223			
			min	max	100%	50%					
Cylinder head											
								Cyl. 1	Cyl. 2	Cyl. 3	Cyl. 4
Wear on valve head	Int. V.	VT03	**0,0** 0,000	**0,0** 0,000	**0,2** 0,008	**0,1** 0,004	actual				
							renewed				
	Exh. V.	VT03	**0,0** 0,000	**0,0** 0,000	**0,2** 0,008	**0,1** 0,004	actual				
							renewed				
Spring length at test load, inner	Int. V.	VT04	**30,4** 1,197	**31,6** 1,244	**30,0** 1,181	**30,2** 1,189	actual				
							renewed				
	Exh. V.	VT04	**30,4** 1,197	**31,6** 1,244	**30,0** 1,181	**30,2** 1,189	actual				
							renewed				
Spring length at test load, outer	Int. V.	VT04	**32,4** 1,276	**33,6** 1,323	**32,0** 1,260	**32,2** 1,268	actual				
							renewed				
	Exh. V.	VT04	**32,4** 1,276	**33,6** 1,323	**32,0** 1,260	**32,2** 1,268	actual				
							renewed				
Spring length at test load, SINGLE	Int. V.	VT04	**32,4** 1,276	**33,6** 1,323	**32,0** 1,260	**32,2** 1,268	actual				
							renewed				
	Exh. V.	VT04	**32,4** 1,276	**33,6** 1,323	**32,0** 1,260	**32,2** 1,268	actual				
							renewed				
Rocker arm shaft support bore	Int. V.	CH05	**12,000** 0,4724	**12,018** 0,4731	**12,090** 0,4760	**12,054** 0,4746	actual				
							renewed				
	Exh. V.	CH05	**12,000** 0,4724	**12,018** 0,4731	**12,090** 0,4760	**12,054** 0,4746	actual				
							renewed				
Rocker arm shaft support bore "oversize"	Int. V.	CH05	**12,200** 0,4803	**12,218** 0,4810	**12,290** 0,4839	**12,254** 0,4824	actual				
							renewed				
	Exh. V.	CH05	**12,200** 0,4803	**12,218** 0,4810	**12,290** 0,4839	**12,254** 0,4824	actual				
							renewed				
Rocker arm shaft	Int. V.	VT05	**11,983** 0,4718	**11,994** 0,4722	**11,950** 0,4705	**11,967** 0,4711	actual				
							renewed				
	Exh. V.	VT05	**11,983** 0,4718	**11,994** 0,4722	**11,950** 0,4705	**11,967** 0,4711	actual				
							renewed				

d02622

Description		Code	Reading new		wear limit	wear limit		Readings 07223			
			min	max	100%	50%					
Cylinder head											
								Cyl. 1	Cyl. 2	Cyl. 3	Cyl. 4
Rocker arm shaft "over-size"	Int. V.	VT05	**12,183** 0,4796	**12,194** 0,4801	**12,150** 0,4783	**12,167** 0,4790	actual				
							renewed				
	Exh. V.	VT05	**12,183** 0,4796	**12,194** 0,4801	**12,150** 0,4783	**12,167** 0,4790	actual				
							renewed				
Rocker arm shaft radial clearance suppurt bore	Int. V.	CH05/ VT05	**0,006** 0,0002	**0,035** 0,0014	**0,150** 0,0059	**0,093** 0,0036	actual				
							renewed				
	Exh. V.	CH05/ VT05	**0,006** 0,0002	**0,035** 0,0014	**0,150** 0,0059	**0,093** 0,0036	actual				
							renewed				
Rocker arm bore (for plastic bush-ing)	Int. V.	VT06	**16,000** 0,6299	**16,018** 0,6306	**16,038** 0,6314	**16,028** 0,6310	actual				
							renewed				
	Exh. V.	VT06	**16,000** 0,6299	**16,018** 0,6306	**16,038** 0,6314	**16,028** 0,6310	actual				
							renewed				
Rocker arm bore (with bronze bushing)	Int. V.	VT07	**12,000** 0,4724	**12,027** 0,4735	**12,150** 0,4783	**12,089** 0,4759	actual				
							renewed				
	Exh. V.	VT07	**12,000** 0,4724	**12,027** 0,4735	**12,150** 0,4783	**12,089** 0,4759	actual				
							renewed				
Rocker arm bore (with bronze bushing) "oversize"	Int. V.	VT07	**12,200** 0,4803	**12,227** 0,4814	**12,350** 0,4862	**12,289** 0,4838	actual				
							renewed				
	Exh. V.	VT07	**12,200** 0,4803	**12,227** 0,4814	**12,350** 0,4862	**12,289** 0,4838	actual				
							renewed				
Rocker arm radial clear-ance (in the bronze bushing)	Int. V.	VT07/ VT05	**0,006** 0,0002	**0,044** 0,0017	**0,160** 0,0063	**0,102** 0,0040	actual				
							renewed				
	Exh. V.	VT07/ VT05	**0,006** 0,0002	**0,044** 0,0017	**0,160** 0,0063	**0,102** 0,0040	actual				
							renewed				
Wall thick-ness of rocker arm plastic bush-ing	Int. V.	VT08	**1,95** 0,0768	**1,98** 0,0780	**1,90** 0,0748	**1,93** 0,0758	actual				
							renewed				
	Exh. V.	VT08	**1,95** 0,0768	**1,98** 0,0780	**1,90** 0,0748	**1,93** 0,0758	actual				
							renewed				

d02622

07582

Description		Code	Reading new min	Reading new max	wear limit 100%	wear limit 50%		Readings Cyl. 1	Cyl. 2	Cyl. 3	Cyl. 4
Cylinder head											
Push rod deflection	Int. V	VT09	**0,000** 0,0000	**0,100** 0,0039	**0,200** 0,0079	**0,150** 0,0059	actual				
							renewed				
	Exh. V	VT09	**0,000** 0,0000	**0,100** 0,0039	**0,200** 0,0079	**0,150** 0,0059	actual				
							renewed				
Intermediate gear of electric starter											
Idle gear bore ∅		ES01	**12,000** 0,4724	**12,035** 0,4738	**12,057** 0,4747	**12,046** 0,4743	actual				
							renewed				
Idle gear shaft ∅		ES02	**11,973** 0,4714	**11,984** 0,4718	**11,950** 0,4705	**11,962** 0,4709	actual				
							renewed				
Radial clearance		ES01/ ES02	**0,016** 0,0006	**0,062** 0,0024	**0,107** 0,0042	**0,084** 0,0033	actual				
							renewed				

d05737

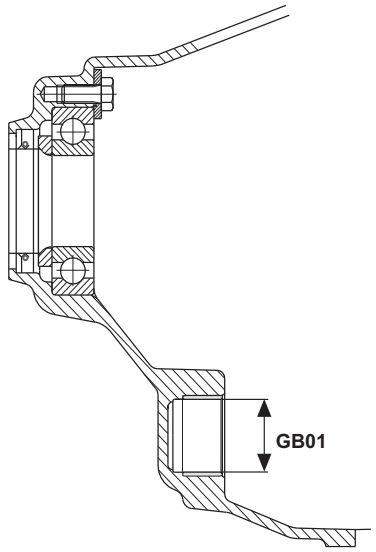

07452

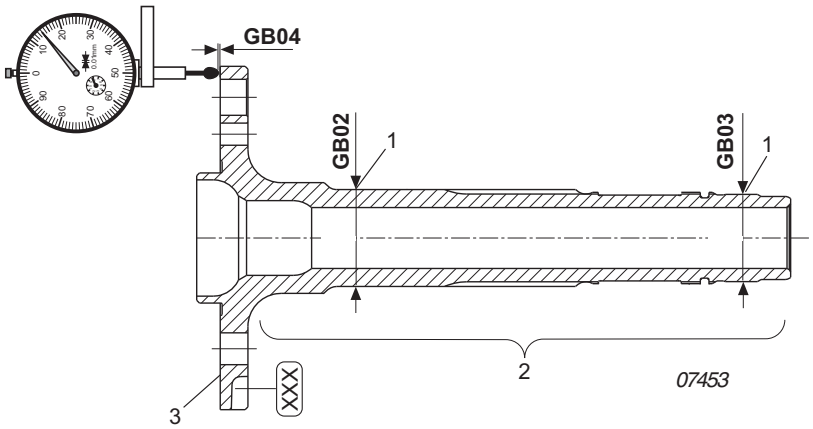

07453

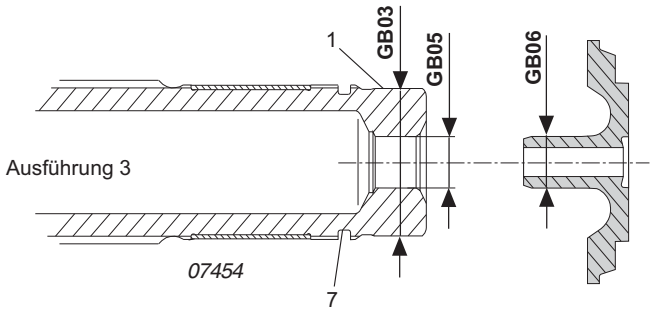

07454

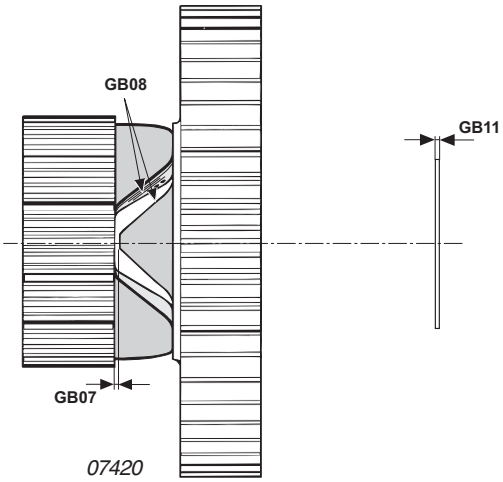

07420

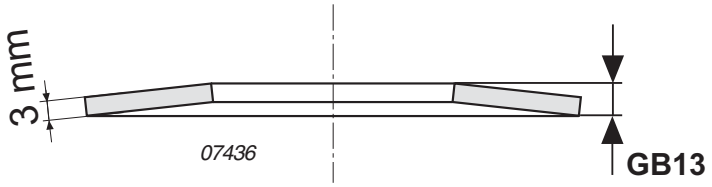

07436

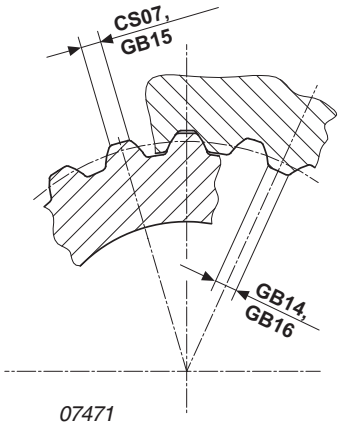

07471

d02622

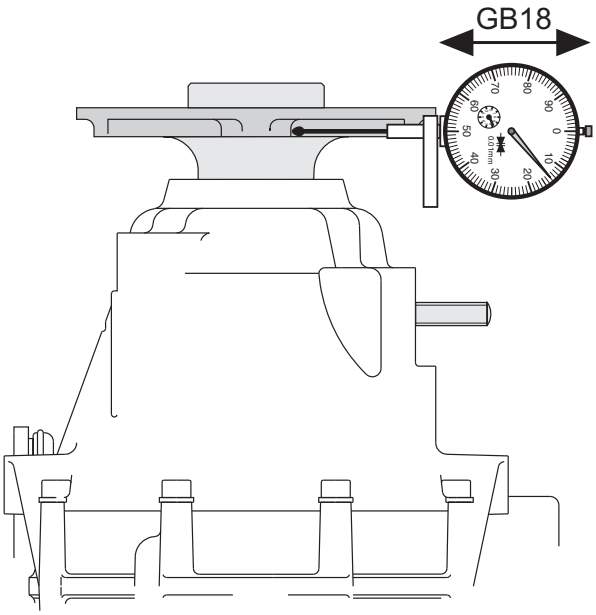

07508

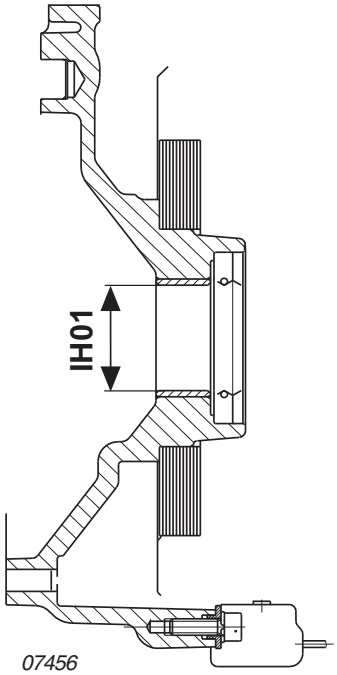

07456

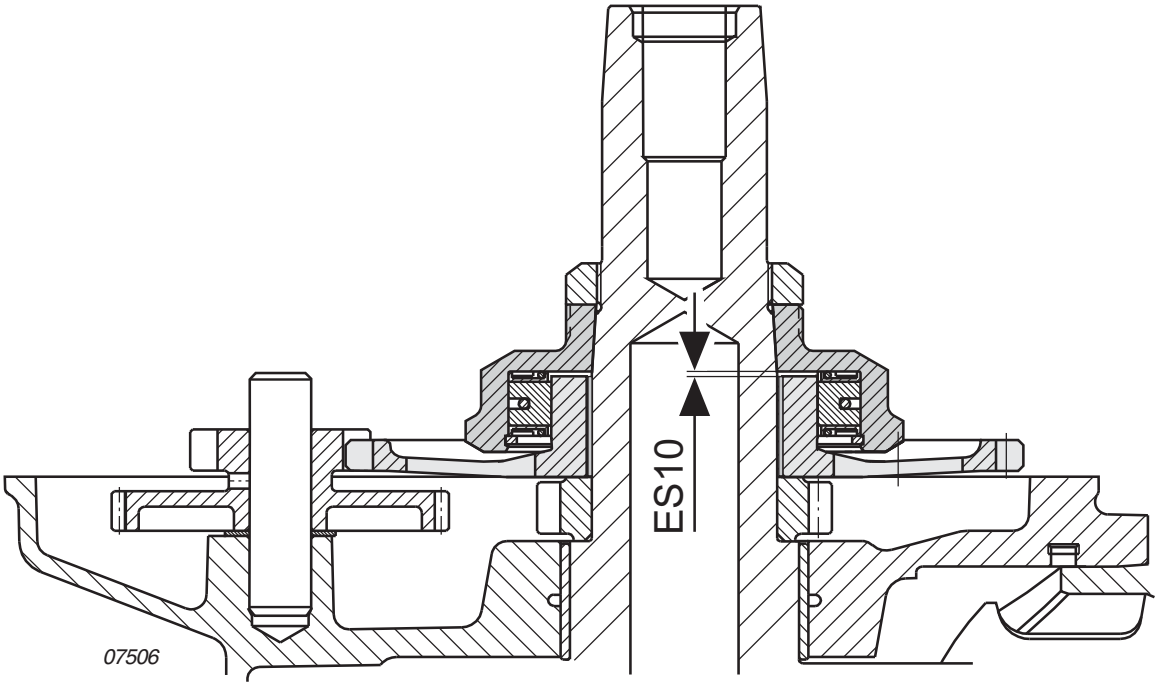

07506

d02622

Description	Code	Reading new		wear limit	wear limit		Readings 08471
		min	max	100%	50%		
Propeller gear box							
1) Bearing bush in gear cover							
Bore	GB01	**28,03** 1,1035	**28,04** 1,1039	**28,10** 1,1063	**28,07** 1,1051	**actual**	
						renewed	
Radial clearance	GB01/ CS04	**0,03** 0,0012	**0,05** 0,0020	**0,12** 0,0047	**0,085** 0,0033	**actual**	
						renewed	
2) Propeller shaft							
Propeller shaft dia. 35 mm	GB02	**35,009** 1,3783	**35,020** 1,3787	**35,003** 1,3781	**35,006** 1,3782	**actual**	
						renewed	
Propeller shaft dia. 31,5 mm	GB03	**31,470** 1,2390	**31,481** 1,2394	**31,460** 1,2386	**31,465** 1,2388	**actual**	
						renewed	
Out of true on prop shaft flange, dia. 122 mm	GB04	**0,00** 0,0000	**0,05** 0,0020	**0,06** 0,0024	**0,055** 0,0022	**actual**	
						renewed	
Bore at back end of prop shaft (on version 3 only)	GB05	**11,00** 0,4331	**11,02** 0,4339			**actual**	
						renewed	
Spigot dia. On oil inlet flange, (on version 3 only)	GB06	**10,935** 0,4305	**10,960** 0,4315			**actual**	
						renewed	
Radial clearance of spigot	GB05/ GB06	**0,040** 0,0016	**0,085** 0,0033	**0,160** 0,0063	**0,123** 0,0048	**actual**	
						renewed	
3) Dog gear, Thrust washer							
Thickness of thrust washer	GB11	**1,075** 0,0423	**1,325** 0,0522	**1,000** 0,0394	**1,038** 0,0408	**actual**	
						renewed	
Free height of disk spring	GB13	**5,20** 0,2047	**5,40** 0,2126	**4,8** 0,1889	**5,00** 0,1968	**actual**	
						renewed	

Description	Code	Reading new		wear limit	wear limit		Readings 08486			
		min	max	100%	50%					
Crankshaft							**Cyl. 1**	**Cyl. 2**	**Cyl. 3**	**Cyl. 4**
Crankshaft angle of twist	GB 20	**0 (degrees)**	**2 (degrees)**			actual				
						renewed				

d05737

Description	Code	Reading new		wear limit	wear limit		Readings 07241
		min	max	100%	50%		
4) Tooth profile							
Crankshaft	CS07	**0,95** 0,0374	**1,00** 0,0374	**0,80** 0,0315	**0,88** 0,0344	actual	
						renewed	
Drive Gear	GB14	**0,95** 0,0374	**1,00** 0,0374	**0,80** 0,0315	**0,88** 0,0344	actual	
						renewed	
Propeller shaft	GB15	**1,50** 0,0591	**1,60** 0,0630	**1,10** 0,0433	**1,30** 0,0512	actual	
						renewed	
Clutch / Dog Hub	GB16	**1,50** 0,0591	**1,60** 0,0630	**1,10** 0,0433	**1,30** 0,0512	actual	
						renewed	
5) gear set, Backlash on gear set							
Drive gear pitting up to 5% of flank area		**0,0**	**0,0**	**5,0%**	**2,5%**	actual	
						renewed	
Dog gear pitting up to 5% of flank area		**0,0**	**0,0**	**5,0%**	**2,5%**	actual	
						renewed	
Backlash of teeth	GB18	**0,07** 0,0028	**0,15** 0,0059	**0,20** 0,0079	**0,18** 0,0069	actual	
						renewed	
6) Overload clutch							
Axial gap	GB07	**1,0** 0,039	**1,2** 0,047	**0,5** 0,020	**0,8** 0,030	actual	
						renewed	
Wear on dog hub	GB08	**0,0** 0,000	**0,0** 0,000	**0,2** 0,008	**0,1** 0,004	actual	
						renewed	
Ignition housing							
Bearing bush in ignition housing	IH01	**32,03** 1,2610	**32,04** 1,2614	**32,10** 1,2638	**32,07** 1,2626	actual	
						renewed	
Radial clearance	IH01/ CS05	**0,03** 0,0012	**0,05** 0,0020	**0,12** 0,0047	**0,09** 0,0033	actual	
						renewed	
Sprag clutch							
Axial clearance	ES10	**0,5** 0,020	**1,1** 0,043	**0,2** 0,008	**0,35** 0,014	actual	
						renewed	

d05737

NOTES

d02622

5) Form Sheets

5.1) Form sheet for material testing ROTAX 912/914 Series

5.1.1) Inspection on cracks (see also 00-00-00, section 10.4)

Description	Findings		Remarks	07207 Checked
	yes	no		
Flywheel hub				
Propeller shaft				
dog gear				
dog hub				
drive gear				

5.1.2) Hardness test according to DIN EN ISO 6506-2 HB 2.5/62.5

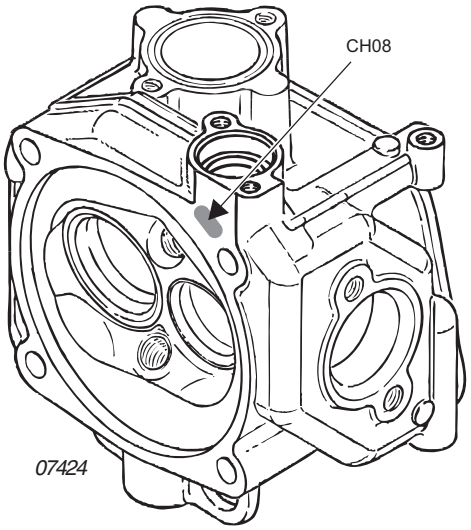

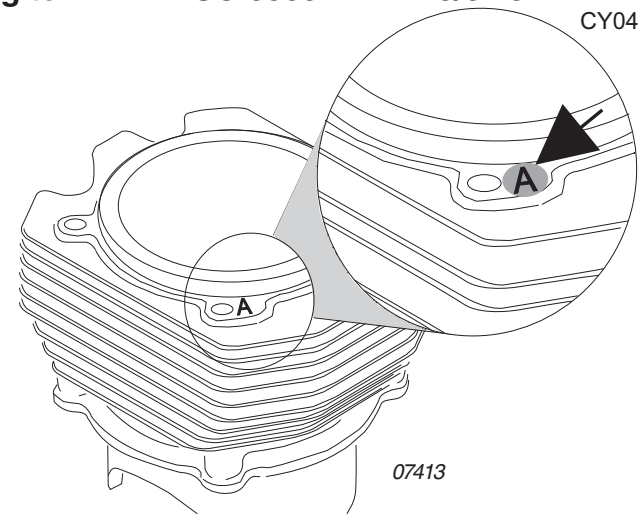

Description	Code	Readings view min.	Actual readings				Remarks	07206 Checked
Camshaft	CA05	630 HV10						
	CA04	900 N/mm2						
			Cyl. 1	Cyl. 2	Cyl. 3	Cyl. 4		
Cylinder head	CH08	85 HB						
Cylinder	CY04	90 HB						

d05737

NOTES

d02622

SECTION 73

FUEL SYSTEM

1) Table of contents

SECTION 73
FUEL SYSTEM

1) Table of contents ..... 73-00-00 / 1
2) Systems description ..... 73-00-00 / 3
2.1) Fuel system (on 912 Series) ..... 73-00-00 / 3
2.2) Fuel system (on 914 Series) ..... 73-00-00 / 5
2.3) Fuel filter ..... 73-00-00 / 7
2.4) Fuel pump (on 912 Series) ..... 73-00-00 / 7
2.5) Fuel pump (on 914 Series) ..... 73-00-00 / 7
2.6) Fuel pressure regulator (only on 914 Series) ..... 73-00-00 / 8
2.7) Pressure connecting lines (only on 914 Series) ..... 73-00-00 / 10
2.8) BING constant depression carburetor type 64-3 ..... 73-00-00 / 12
2.9) Handling of fuel ..... 73-00-00 / 15
2.10) Connections for instrumentation ..... 73-00-00 / 15
2.10.1) Airbox air temperature display (only on 914 Series) ..... 73-00-00 / 15
2.10.2) Boost pressure display ..... 73-00-00 / 15
2.11) Carb heat system and winter operation ..... 73-00-00 / 16
3) Maintenance ..... 73-00-00 / 16
3.1) Disassembling fuel pump, carburetors, carburetor sockets, fuel lines and drip tray (on the 912 Series) ..... 73-00-00 / 16
3.2) Disassembling carburetors, carburetor sockets, fuel lines and drip tray (on the 914 Series) ..... 73-00-00 / 21
3.3) BING-constant depression carburetor inspection ..... 73-00-00 / 23
3.3.1) General note ..... 73-00-00 / 23
3.3.2) Float needle valve leakage test ..... 73-00-00 / 24
3.3.3) Individual components of the carburetor (on the 912 Series) 73-00-00 / 25
3.3.4) Individual components of the carburetor (on the 914 Series) 73-00-00 / 26
3.3.5) Diaphragm ..... 73-00-00 / 27
3.3.6) Jet needle ..... 73-00-00 / 27
3.3.7) Float chamber, floats ..... 73-00-00 / 29
3.3.8) Float brackets ..... 73-00-00 / 30
3.3.9) Carburetor jets ..... 73-00-00 / 31
3.3.10) Float needle valve inspection ..... 73-00-00 / 32

d04777

3.3.11) Starting carburetor (choke) ..... 73-00-00 / 33
3.3.12) Carburetor assembly ..... 73-00-00 / 33
3.3.13) Carburetor synchronization ..... 73-00-00 / 35
3.3.14) Idle speed adjustment ..... 73-00-00 / 35
3.3.15) Throttle cable and linkage ..... 73-00-00 / 35
3.4) General information on the fuel system ..... 73-00-00 / 36
3.4.1) Fuel pressure (on 912 Series) ..... 73-00-00 / 37
3.4.2) Fuel pressure (on 914 Series) ..... 73-00-00 / 39
3.4.3) Carburetor sockets and compensation tube ..... 73-00-00 / 40
3.4.3.1) Carburetor sockets ..... 73-00-00 / 40
3.4.3.2) Compensation tube ..... 73-00-00 / 40
3.4.4) Fuel pressure regulator (only on 914 Series) ..... 73-00-00 / 42
3.4.5) Fuel pump (on 912 Series) ..... 73-00-00 / 43
3.4.6) Fuel pump (on 914 Series) ..... 73-00-00 / 45
3.4.7) Pressure connecting lines (only on 914 Series) ..... 73-00-00 / 47
3.5) Assembly of carburetor sockets, carburetor and fuel lines ..... 73-00-00 / 51
3.5.1) Fuel pump ..... 73-00-00 / 51
3.5.2) Carburetors and carburetor sockets ..... 73-00-00 / 51
3.5.3) Assembly of the fuel lines (on 912 Series) ..... 73-00-00 / 53
3.5.4) Assembly of the fuel lines (on 914 Series) ..... 73-00-00 / 57
3.6) Intake manifolds fitting ..... 73-00-00 / 59
3.7) Engaging the carburetor support ..... 73-00-00 / 59
3.8) Connecting fuel lines (tank) ..... 73-00-00 / 60

d04352

2) Systems description

2.1) Fuel system (on 912 Series)

See Fig. 73-1.

The fuel system comprises the following items:

- fuel tank
- coarse filter
- fine filter
- water drain cock
- fire cock
- 1 mechanical fuel pump
- 2 carburetors
- and the required fuel piping and connections

The fuel passes from the tank (1) with the coarse filter (2) via the fire cock (3), the water drain cock (4) and the fine filter (5) to the mechanical fuel pump (6). The latter then pumps the fuel to the two carburetors (7).

The surplus fuel passes back to the tank or to the suction side of the fuel system via the return line (8).

◆ NOTE: The return line prevents malfunctions caused by the formation of vapor lock. The return line must be restricted to allow circulation of surplus fuel and air without loosing pressure.

d02623

Fig. 73-1

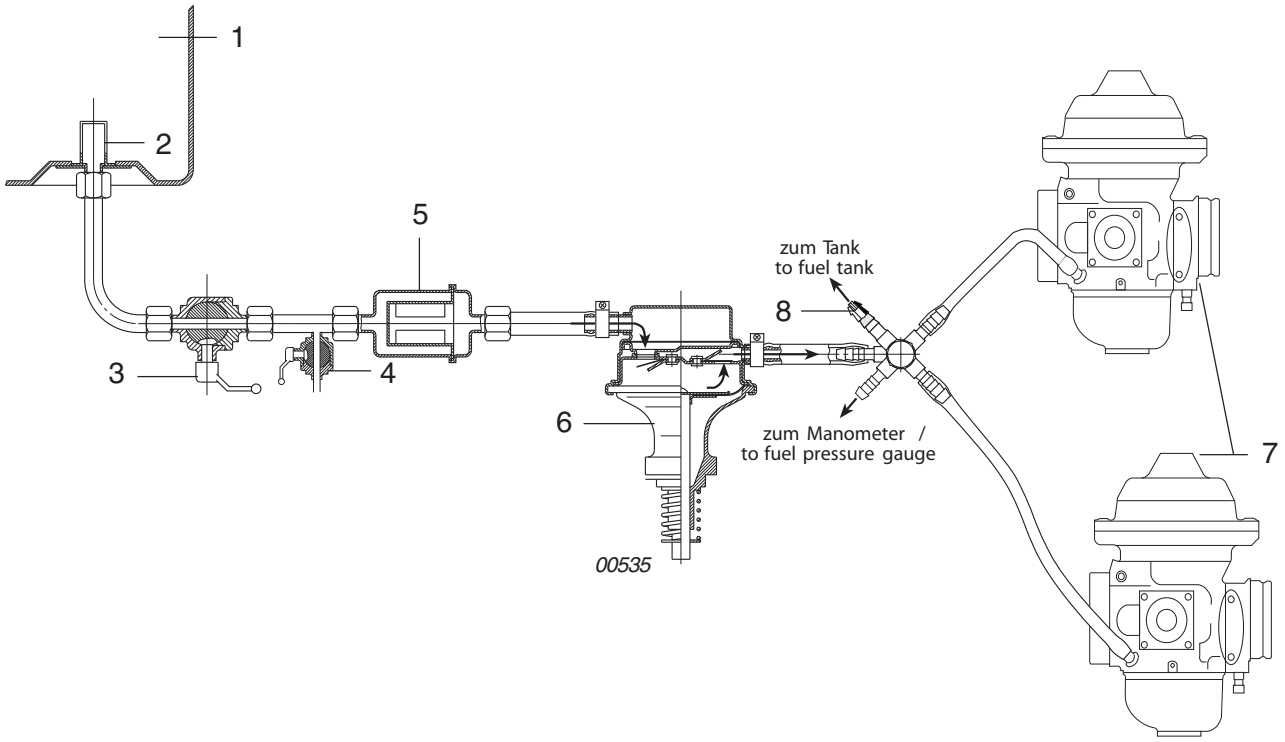

Legend:

(1) inlet from the tank

(2) coarse filter

(3) fire cock

(4) water drain cock

(5) fine filter

(6) mechanical fuel pump

(7) carburetors

(8) return line to tank

d02623

2.2) Fuel system (on 914 Series)

See Fig. 73-2.

The fuel system comprises the following items:

- fuel tank
- coarse filter
- fine filter / water trap
- fire cock
- 2 electric fuel pumps
- 2 check valves
- and the required fuel piping and connections

The fuel flows from the tank via a combination of filter and water trap (1) to the two electric fuel pumps ((2) and (3)), connected in series, passes on to the fuel pressure regulator (5) and further on to the individual carburetors.

A separate check valve (4) is installed parallel to each fuel pump.

◆ NOTE: The arrangement of the two fuel pumps connected in series yields better reserves against vapor lock at high altitudes and temperatures.

The two check valves in the system are necessary to ensure trouble free operation of the fuel system with one pump only.

The surplus fuel passes from the fuel pressure regulator back to the tank via the return line (7).

◆ NOTE: The fuel pressure regulator serves to maintain the fuel pressure at always approx. 0.25 bar (3.6 p.s.i.) above the changing boost pressure in the airbox, thus ensuring proper operation of the carburetors.

d02623

Fig. 73-2a

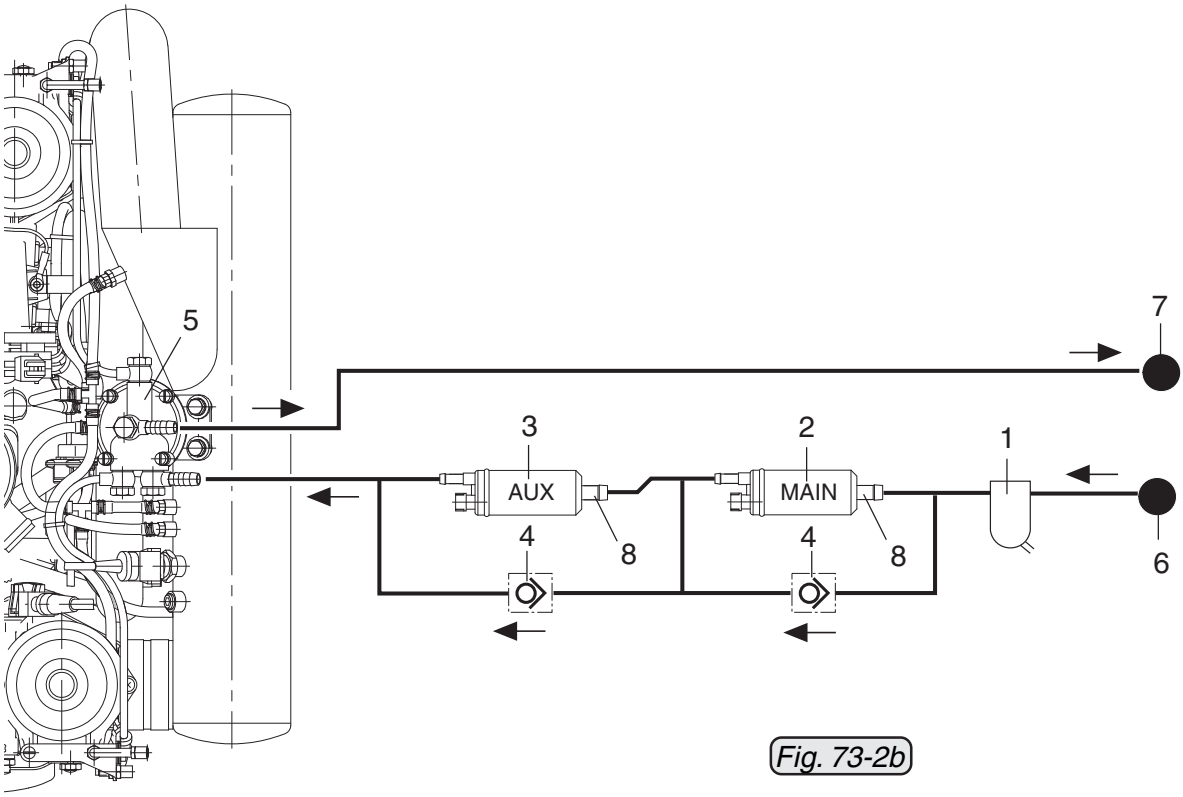

00103

Fig. 73-2b

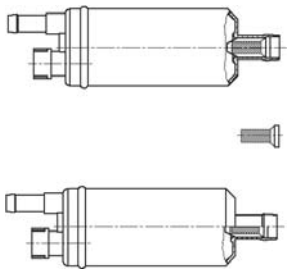

00157

Legend:

(1) fine filter / water trap
(2) main fuel pump (MAIN)
(3) auxiliary fuel pump (AUX)
(4) check valve
(5) fuel pressure regulator
(6) inlet from the tank
(7) return line to tank
(8) fuel filter

d04777

2.3) Fuel filter

A **fine filter** in the fuel supply line between tank and inlet to the two fuel pumps must have been installed by the aircraft manufacturer.

◆ NOTE: At the suction side the fuel pumps are equipped with a filter.

2.4) Fuel pump (on 912 Series)

The engines of the 912 Series are equipped with a mechanical fuel pump. It is driven via an eccenter in the propeller gearbox.

2.5) Fuel pump (on 914 Series)

To warrant safe and adequate operation of the fuel system, two independent selfpriming vane pumps are used. The voltage supply to the two pumps must be established completely independently.

◆ NOTE: Voltage supply to main pump (MAIN) directly from internal alternator and supply to the supplementary pump (AUX) from bus bar or battery.

For engine operation, the rate of delivery of one pump alone is entirely sufficient.

■ CAUTION: Use only genuine ROTAX fuel pumps, as the pump must meet certain requirements.

d04777

2.6) Fuel pressure regulator (only on 914 Series)

See Figs. 73-3 and 73-4.

The fuel pressure regulator (1) is mounted on the airbox.

Fuel pressure control is essential for flawless engine operation because it keeps the fuel pressure permanently at approx. 0.25 bar (3.6 p.s.i.) above the varying boost pressure in the airbox.

Design and function of the fuel pressure regulator:

The diaphragm (2) divides the pressure regulator into the top fuel chamber (3) and the air chamber (4). The force of the pressure spring, which is set by the adjusting screw (5) establishes an equilibrium of forces on the diaphragm at a fuel pressure 0.25 bar (3.6 p.s.i.) above the actual airbox pressure on the other side.

■ CAUTION: All fuel pressure regulators are calibrated by the engine manufacturer and need no further adjustment or maintenance.

◆ NOTE: The arrows cast into the top side of the fuel pressure regulator are of no significance for the usage, as inlet (6) and outlet (7) are directly connected via the chamber.

◆ NOTE: Ensure that the cap nut (8) is securely tightened, as otherwise the fuel pressure may drop.

Fig. 73-3

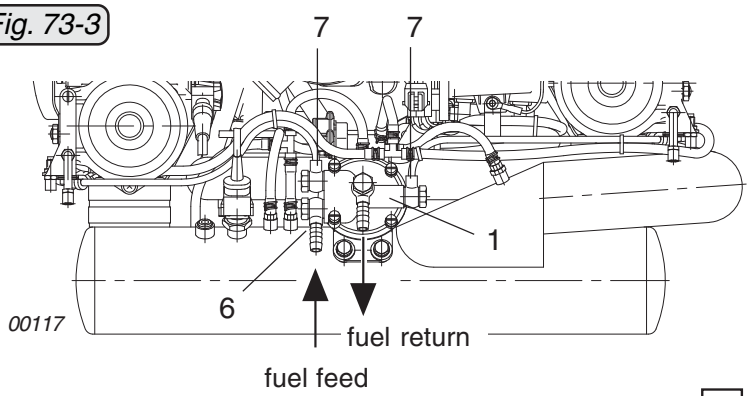

Fig. 73-4

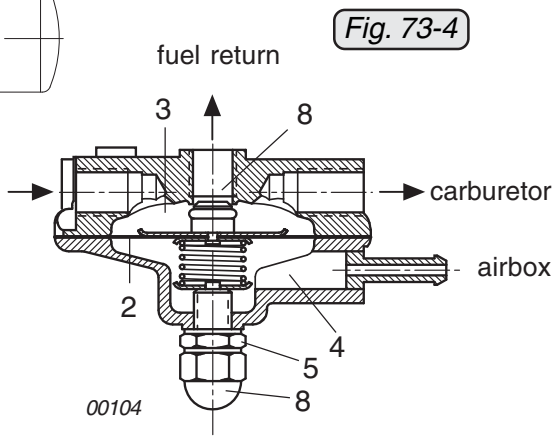

Part of the fuel flow from the pumps (approx. 100 l/h) is routed back to the fuel tank via the diaphragm controlled cone valve (8), thus establishing a pressure 0.25 bar (3.6 p.s.i.) higher in the top chamber (fuel side) than in the lower chamber (air side).

Since the lower chamber is connected with the airbox via the pressure line, the pressure of the fuel entering the carburetor will also be 0.25 bar (3.6 p.s.i.) above airbox/float chamber pressure.

Fuel pressure = airbox pressure + 250 hPa

At 1000 m altitude with the prevailing ambient pressure of approx. 900 hPa, the following values will arise at **take-off performance**:

Fuel pressure = 1370 + 250 = 1620 hPa

Therefore the required delivery pressure of the fuel pump will be

1620 - 900 = **720 hPa**

Rising airbox pressure will press the diaphragm upwards, thus preventing fuel flow back to the tank, i.e. fuel pressure rises until equilibrium is reached again.

■ CAUTION: Correct excess fuel pressure is essential for proper functioning of the carburetor.

- too **low** fuel pressure (wrong calibration, malfunction of regulator or fuel pumps...) leads to a leaner mixture and can result in engine faults or engine failure as not enough fuel or no fuel at all reaches the float chamber.
- too **high** fuel pressure (wrong calibration, malfunction of regulator, increased flow resistance, blockage of return line,...) leads to a richer mixture till flooding of carburetors occurs, causing engine faults or engine stoppage.

d02623

2.7) Pressure connecting lines (only on 914 Series)

See Fig. 73-5.

The engines of the 912/914 Series are equipped with constant depression carburetors. For the operation of the carburetors it is necessary that

a) **the atmospheric pressure in the float chamber corresponds with atmospheric pressure at carburetor air intake (airbox)**

With varying airbox pressure (carb air intake) this changing pressure must also act upon the float chamber.

For this reason, the float chamber venting is connected to the airbox via a pressure connecting line (1).

b) **the fuel pressure is approx. 0.25 bar (3.6 p.s.i.) above the pressure at air intake (airbox).**

For this reason, the fuel pressure regulator (only on 914 Series) is connected to the airbox via a pressure connecting line (1).

Enriching of the fuel air mixture at take-off performance

The airbox is furnished with 2 separately located pressure connections connected with the 3-way solenoid valve (2) via pressure connecting lines (1).

Up to maximum continuous performance (approx. 1190 hPa airbox pressure), the float chambers of the carburetors are vented with the static airbox pressure via connection (3). At an airbox pressure above 1270 hPa, the pressure in the float chambers will be raised by the **ram air pressure** at airbox (connection (4)) initiated by the TCU via an electric solenoid valve (2).

As a result, the effective pressure in the fuel bowl will be increased by the same amount.

d02623

The purpose of enriching the mixture is to reduce the thermal load on the engine during the shorter takeoff phase and to provide added protection against knocking combustion (detonation).

▲ WARNING: The pressure connecting lines must function properly to ensure correct engine running. Otherwise engine stoppage can be expected. The lines must therefore be in serviceable condition and free of kinks, secured with clamps and seated securely on their connections.

Fig. 73-5

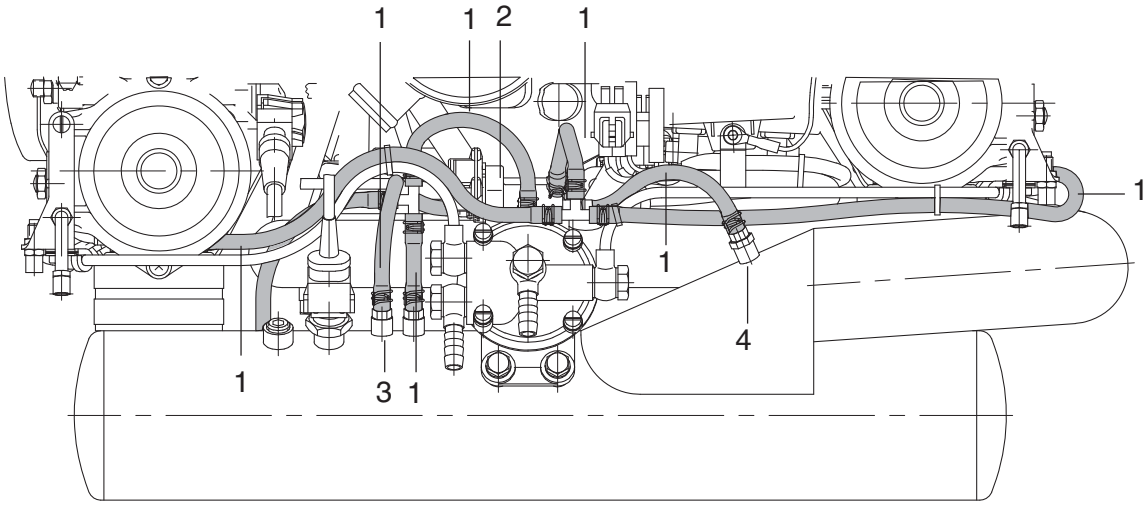

d02623

2.8) BING constant depression carburetor type 64-3

See Figs. 73-6, 73-7 and 73-8.

The BING constant depression carburetor type 64-3 is a cross-draft butterfly valve carburetor with variable venturi, double float system arranged centrally below the venturi, and a rotary disc valve type starting carburetor. Its particular feature is the carburetor piston (2), which is suspended on a rubber diaphragm (3) and protrudes into the venturi. It adjusts the smallest crosssection ("air funnel") of the venturi depending on the vacuum prevailing there. The vacuum is influenced by actuation of the throttle valve (1) and the carburetor piston moves accordingly. The throttle valve diameter is 36 mm (1.42 in.).

When the fuel has reached the specified level in the float chamber, the floats close the needle valve (4) via the float bracket, thus preventing any further supply of fuel.

◆ NOTE: The atmospheric pressure in the float chamber is decisive for the function of the carburetor and must correspond with the air pressure at entry into the carburetor. Too high pressure enriches the mixture, too low pressure leans down the mixture, possibly leading to engine stop.

The float chamber airspace is connected by a channel with the venting nipple (18). The channel must be clear. With a hose connected on the venting nipple, the correct pressure in the float chamber is established.

The amount of mixture drawn in by the engine and thus its performance are determined by the cross-sectional area in the venturi, which is opened by the throttle valve (1). If the throttle valve is opened while the engine is running, the increased airflow in the venturi results in a vacuum building up at the outlet of the needle jet (16), which draws fuel from the float chamber through the jet system.

The vacuum in the venturi acts on the top side of the diaphragm via the bore (12) in the carburetor piston and attempts to lift the piston against its own weight and the spring. The reference pressure prevailing between air filter and carburetor (e.g. ambient air pressure) is applied to the bottom side of the diaphragm via channel (13). The space in the cover above the piston guide is vented through bore (14). The bore diameter determines the piston damping.

d02623

On its way from the float chamber to the venturi, the fuel passes through the main jet (7), the mixing tube and the needle jet and in the diffuser tube (8) is pre-mixed with air which is brought in from the air filter via the air duct (9) and the atomizer in an annular flow around the needle jet. This air flow assists the atomizing process and favors fuel distribution in the manifold.

The jet needle (10), which is responsible for part load, is kept in the defined position by the retaining clip (11).

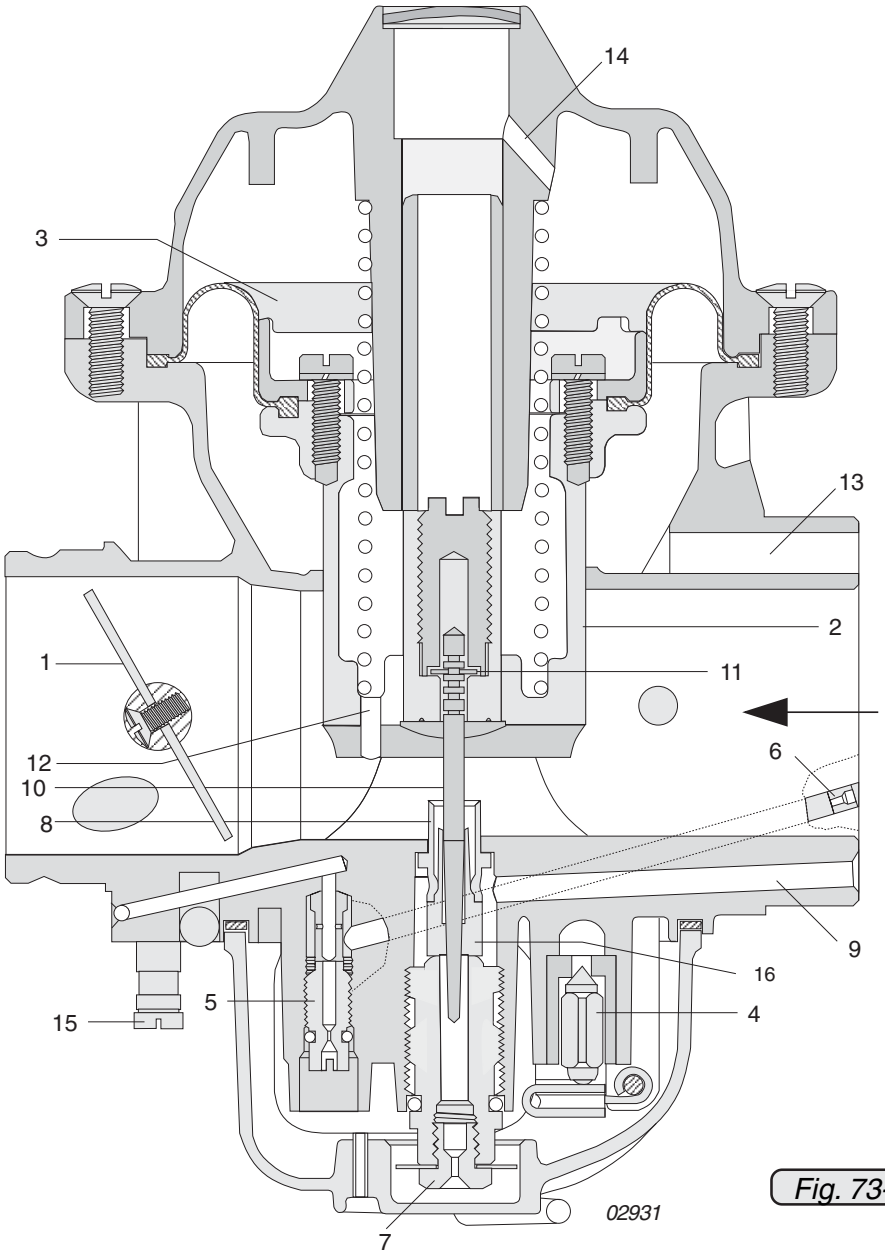

Fig. 73-6

d02623

During idling and low-load operation of the engine, the throttle valve is closed to such an extent that the airflow underneath the carburetor piston (2) no longer forms a sufficient vacuum. The supply of fuel to the intake air is then effected via the idling system, which consists of the idle jet (5) and the idling air jet (6).

As an aid for starting a cold engine, the BING constant depression carburetor is provided with a rotary disc valve starting carburetor (17) using a Bowden cable.

▲ WARNING: With the throttle lever not connected, the carburetor will remain in **full throttle position**. See Fig. 73-7.

For this reason, never start the engine without first connecting the throttle lever.

Fig. 73-7

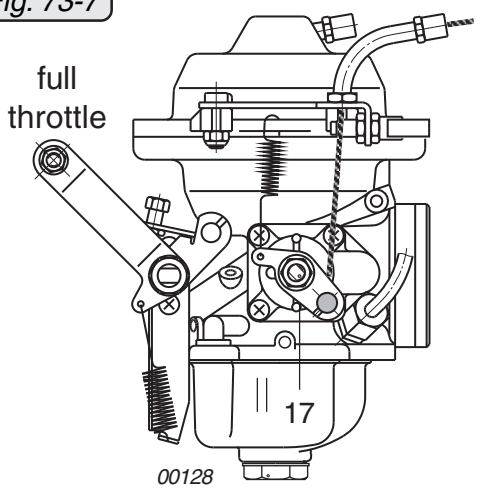

Fig. 73-8

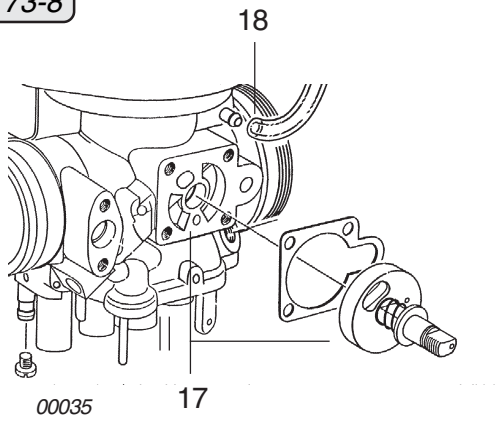

d02623

2.9) Handling of fuel

Use only clean gasoline of a registered brand.

Unleaded fuels contain alcohol. Alcohol binds up to 50 % of its own volume in water. Water enters the system mainly in the form of condensation. For this reason, avoid extreme differences in temperature, long period storage, direct sun and plastic containers. When handling fuel, observe the directives without fail.

When refuelling, observe the relevant regulations of the competent aviation authorities.

▲ WARNING: Before refueling, switch off ignition and remove ignition key!

▲ WARNING: Filter fuel (using filter funnel) when filling the tank. Use only clean, non-translucent safety approved fuel containers.

▲ WARNING: Only handle fuel in well ventilated places. Never fill fuel in enclosed spaces. Gasoline is highly inflammable and explosive. Do not smoke, do not allow open flames or sparks in the vicinity. Do not fill the tank to the brim, allow for expansion of the fuel. Never refuel while engine is running.

For further information, see SI-912-016 and SI-914-019 “Operating fluids“, latest issue.

2.10) Connections for instrumentation

■ CAUTION: Also consult the instructions regarding the connection for instrumentation in the Installation Manual.

2.10.1) Airbox air temperature display (only on 914 Series)

A connection is provided in the airbox for measurement of the air temperature . On the standard engines, this connection is closed by a plug screw.

2.10.2) Boost pressure display

A connection is provided for an absolute pressure gauge in the compensation tube for the indication of the boost pressure.

■ CAUTION: If no manifold pressure gauge is installed make sure that the connector is sealed so that no external air can be drawn in.

d04777

◆ NOTE: On newer engines the manifold pressure fitting is plugged with a M 3.5 screw. Remove this screw before attaching a manifold pressure hose. See therefore SI-912-020 and SI-914-022 “running modifications” respectively.

2.11) Carb heat system and winter operation

The risks of carburetor icing are commonly known. The icing of air humidity in the carburetor may be avoided by preheating the air.

◆ NOTE: An airbox with a carburetor preheating flap is available for engines of the 912 Series.

◆ NOTE: Engines of the 914 Series normally do not require any preheating device as the intake air is preheated by the turbocharger.

◆ WARNING: Carburetor icing is a common cause of engine faults.

Because of the heating up of intake air due to the boost process, preheating of the intake air might not be necessary. But the option of a change over for air intake from the engine compartment is recommended as, for instance, the filter could be blocked by icing.

Preheating of the intake air will result in loss of engine performance because of the reduction in air density.

A further measure to reduce the risk of carburetor icing is to keep the water content of the fuel low by proper handling. Also, install a generously dimensioned water trap in the fuel system of the aircraft to prevent the formation of ice in the fuel lines, filters etc.

3) Maintenance

The following sections describe maintenance procedure for engines of the 912/914 Series above and beyond the maintenance and special checks, see corresponding Maintenance Manual (Line Maintenance) for the respective engine type, 912 Series or 914 Series, and the systems descriptions given hitherto. The description is divided into subsections and descriptions of the function of the various systems.

3.1) Disassembling fuel pump, carburetors, carburetor sockets, fuel lines and drip tray (on the 912 Series)

See Fig. 73-9, 73-9/1 and 73-9/2.

■ CAUTION: When disassembling the fuel lines support them so that tension or additional strain is avoided.

d04777

■ CAUTION: Replace the insulating flange each time when the fuel pump is removed.

To remove the fuel pump (1) remove feed line (2) and hex nuts (3), then remove the fuel pump together with the insulating flange (4).

◆ NOTE: See SI-912-020 “Running modification”, latest issue.

The carburetors must be removed for inspection or maintenance.

◆ NOTE: Models produced from the year 2007 onwards have a flexible fuel line (5). See Fig. 73-9/2.

◆ NOTE: Usually it is not necessary to remove the clamp block (6). However, if it should become necessary to remove it, ensure that it is refitted in the same position.

Rigid fuel line

The fuel line (7) is supported by a cable clamp (8) on the carburetors. These clamps are attached with allen screws M5x12 (9) and lock nuts (10), which must be removed. Unscrew the collar nut (11) from the carburetor. Unscrew the banjo bolts (12) from the clamp block (6).

◆ NOTE: Airboxes of older build have drainage conncectors in vertical alignment.

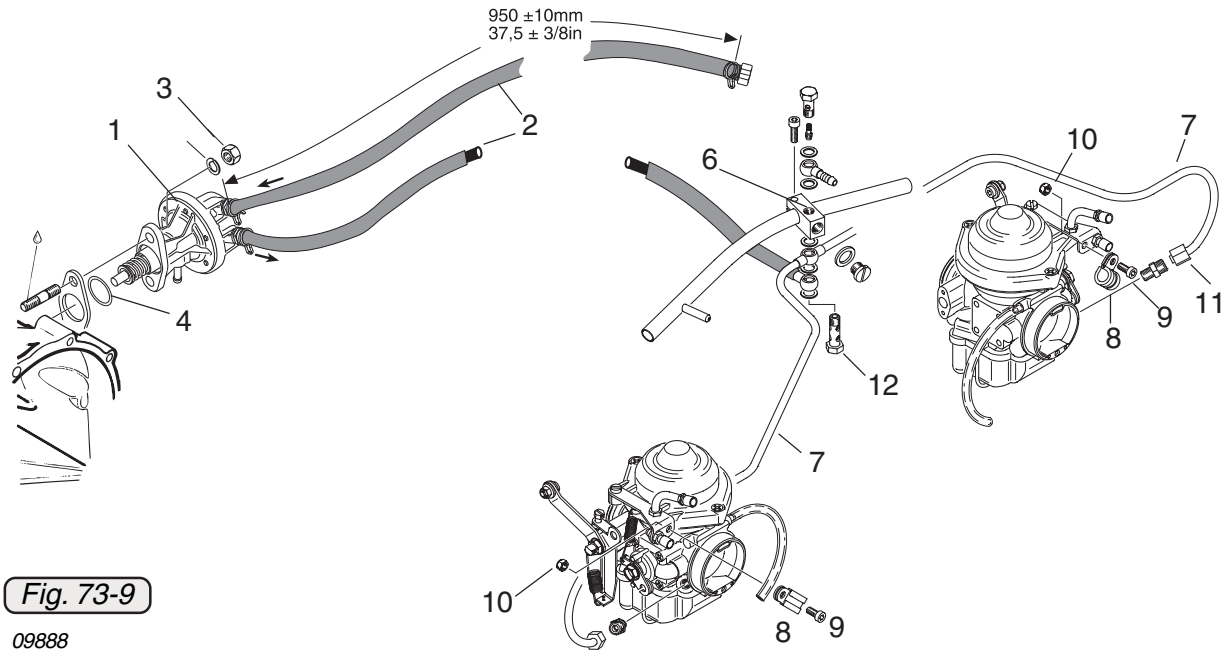

Fig. 73-9

09888

d05738

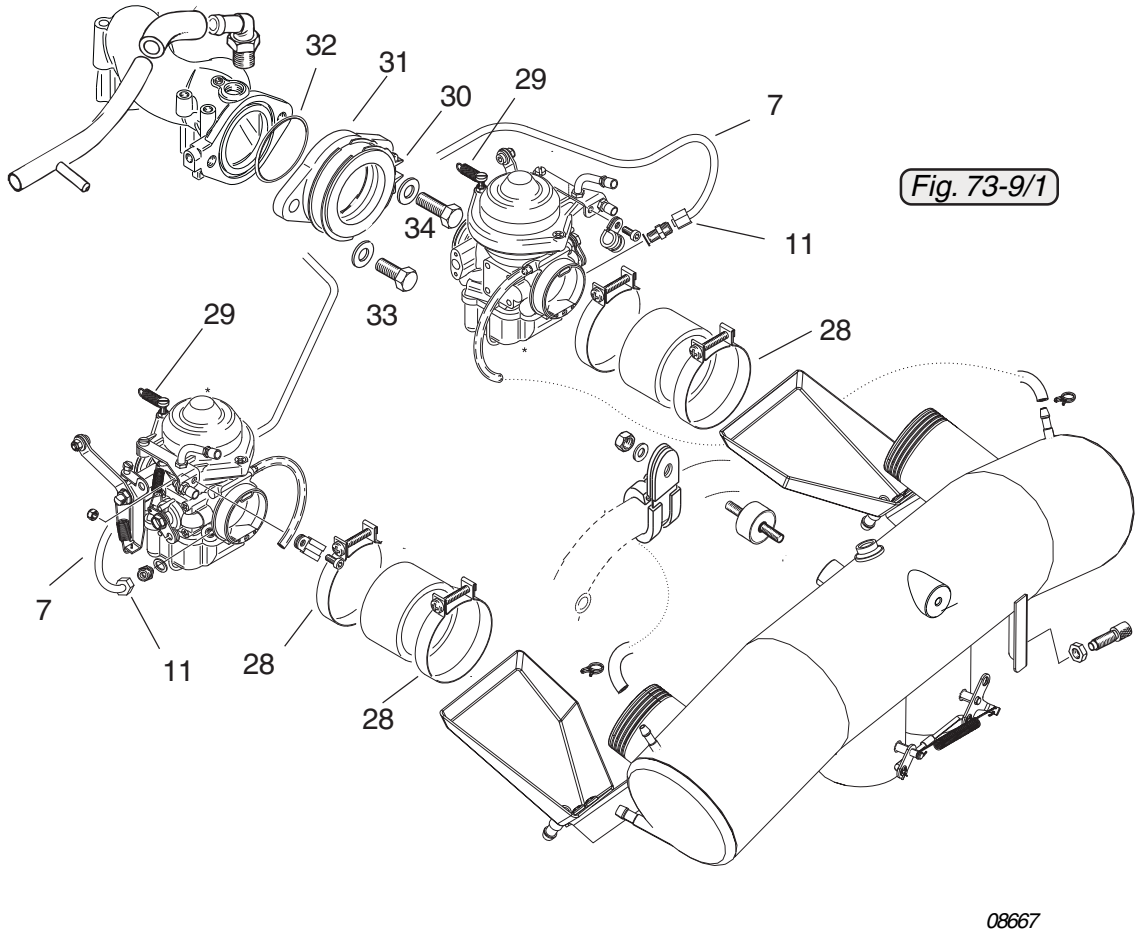

Fig. 73-9/1

d04777

Flexible fuel line

See Fig. 73-9/2

Each fuel line (5) is supported by a cable clamp (13) on the intake manifold. Each of these clamps is attached with an allen nut M8 (14), which must be removed.

Further the fuel line is attached with 2 cable straps (15) to the compensation tube (16).

At the carburetors the ring hose nipple of the fuel line is installed with a distance sleeve (17) and sealing rings (18). After unscrewing the banjo bolt (19) take off the fuel lines.

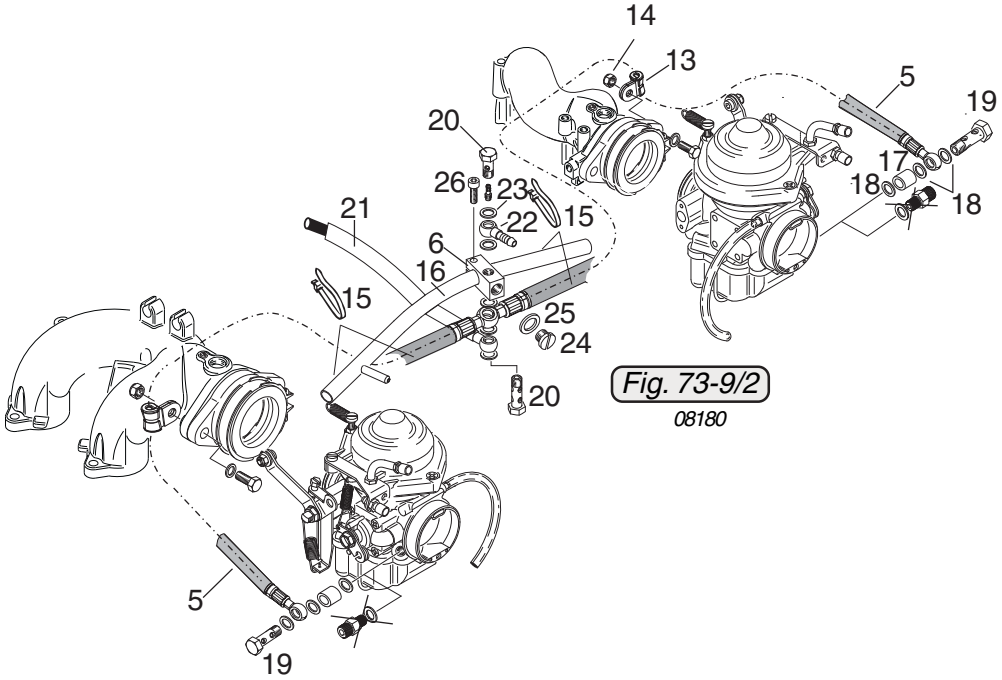

Fig. 73-9/2

08180

All fuel lines lead to the fuel manifold. Unscrew the banjo bolts (20). Remove the fuel line (21) (hose line).

Now the fuel lines (5 or 7), the ring hose nipple (22) (connection for return line and pressure gauge) and 5 sealing rings (23) can be removed.

Unscrew allen screw M10x1x8 (24) with the sealing ring (25).

Carry out a visual inspection of all fuel lines for damage and wear. Pay particular attention to the formation of any cracks in the area of the connections.

Check the lines for free passage with compressed air and inspect the lines for scuffing marks.

d04777

Carry out a visual inspection of the clamp block (6) of the fuel manifold, the two banjo bolts (20) and the ring hose nipple (22).

◆ NOTE: It is not normally necessary to remove the clamp block (6). However, if it should become necessary to remove it, it must be reattached with an allen screw M5x16 (26) (tightening torque 6 Nm (53 in.lb). Ensure that it is refitted in the same position.

Inspect banjo bolts (20) for hairline cracks, deformation or tears in the area of the hole (27). If the hole is visibly ovalshaped, the banjo bolt has been overstretched and must be replaced. See Fig. 73-9/2.

■ CAUTION : In the event of leaks, the max. permissible torque must never be exceeded.

If the engine is equipped with a ROTAX Original Airbox, the screw hose clamps (28) must be released before the carburetors can be removed. See Fig.73-9/1. Remove the tension spring (29) for carburetor suspension.

Losen the clamp (30) on the carburetor socket (31) and remove the carburetor with twisty motions. Close off the intake openings of the carburetor sockets with appropriate covers.

Remove the hex. screws (31) M8x25, M8x30 (33) and washers to disassemble the carburetor sockets (12). Then the carburetor socket (31) and the O-Ring (32) can be taken off.

◆ NOTE: See SB-912-030, ”Cracks, wear and distortion on the carburetor flange”, latest issue.

Fig. 73-9/3

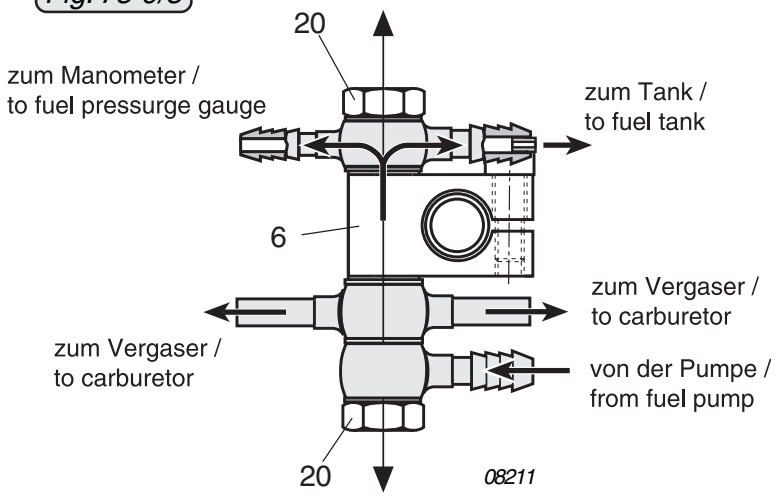

Fig. 73-9/4

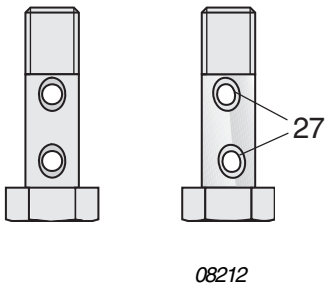

d04352

3.2) Disassembling carburetors, carburetor sockets, fuel lines and drip tray (on the 914 Series)

See Figs. 73-10 and 73-11.

To remove the carburetors, loosen the screw hose clamps (3). Remove the fuel line (4) by removing banjo bolts M10 (5) with sealing rings (6).

Remove the clamps (7) of the pressure connecting lines (8) on the carburetor (float chamber venting) and the fuel pressure regulator (17) (only on 914 Series) and pull off the lines.

Remove the tension spring (9) for carburetor suspension with a suitable tool.

Now the airbox (10) can be pulled off the carburetors towards the back .

◆ NOTE: If required, remove 2-pin plug connection of temperature sensor (11) and/or loosen air intake hose (12).

Remove 3-pin plug connection of the throttle potentiometer.

Release the clamp (13) of the carburetor socket (14), remove the carburetor with the fuel lines with slight turning and swiveling movements and close off the intake openings.

Remove cable clamp (16), release collar nut (17) and take off the fuel lines.

Remove the hex. screws (15) 2 M8x25 and washers to disassemble the carburetor sockets (14). Then the carburetor socket (14) and the O-Ring (18) can be taken off.

◆ NOTE: See SB-914-019,"Cracks, wear and distortion on the carburetor flange", latest issue.

◆ NOTE: On older engine versions, the drip tray (19) is not fitted on the airbox but directly on the intake manifold (20), see Fig. 73-10.

d04352

Fig. 73-10

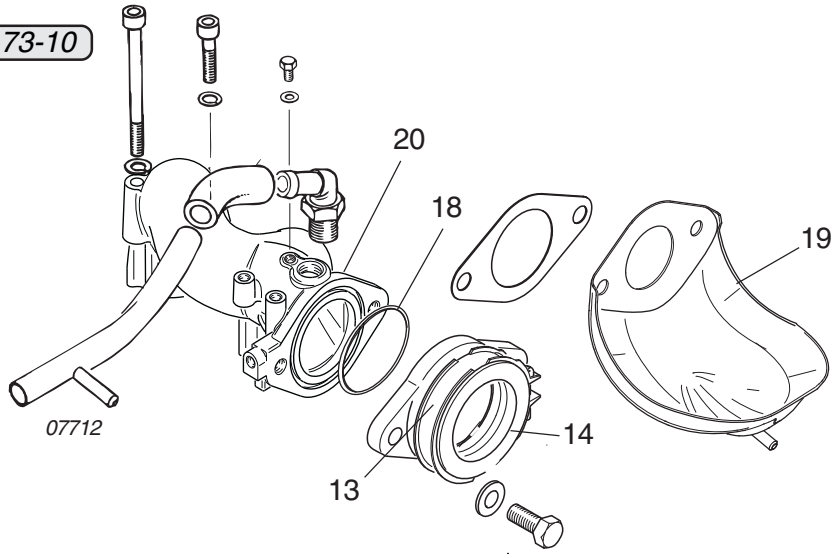

Fig. 73-11

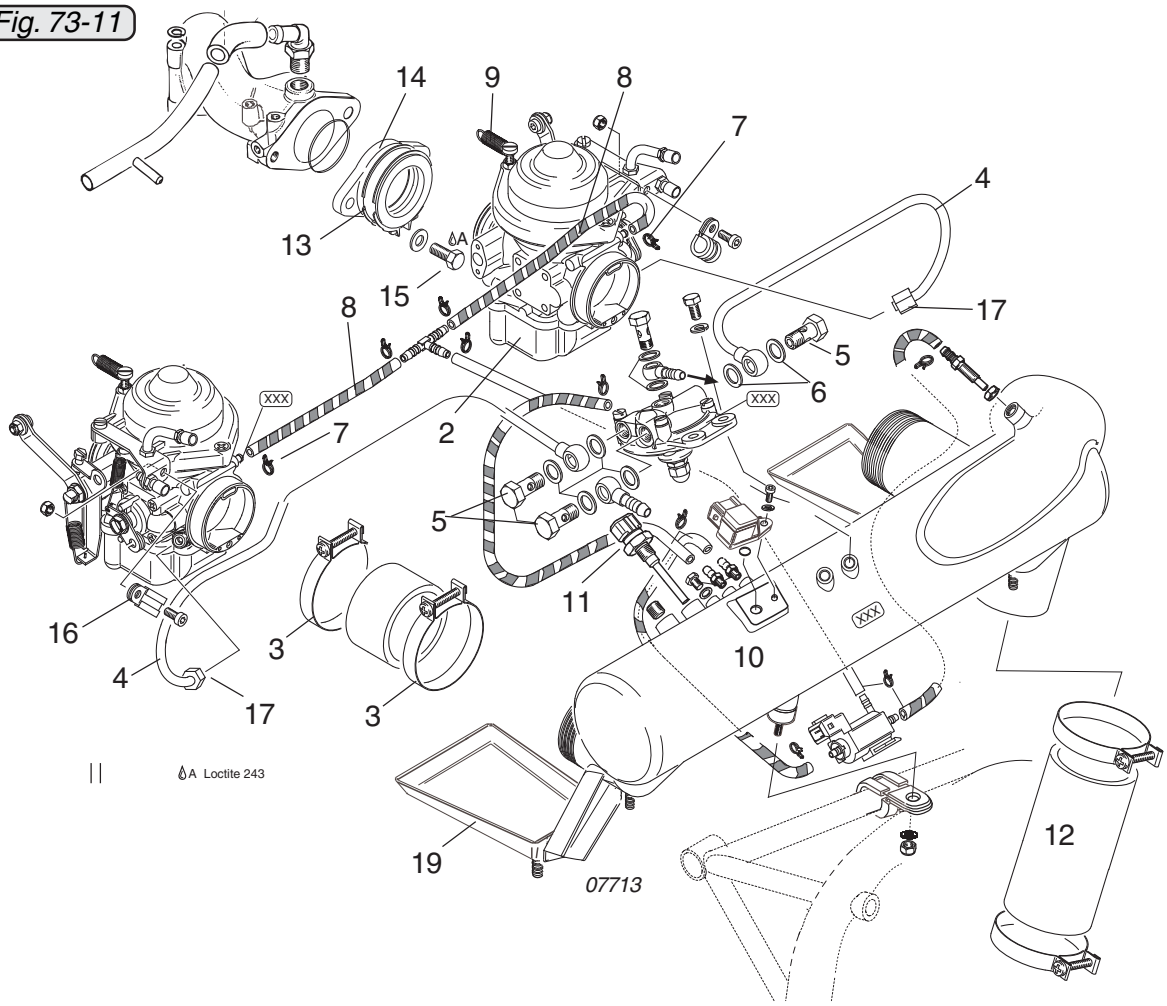

3.3) BING-constant depression carburetor inspection

3.3.1) General note

See Figs. 73-12, 73-13 and 73-14.

■ CAUTION: The determination of the main jet is carried out by the manufacturer on a test bed at 300 m (1000 ft) above Mean Sea Level.

Only aeronautical personnel or authorized testers acting on our instructions may carry out modifications to BRP-Powertrain specifications.

Values must be recorded in the engine logbook.

■ CAUTION: To avoid contamination in the fuel system, proceed with great care and cleanliness. It is essential to store carburetors and dismantled parts on clean surfaces.

◆ NOTE: See SI-912-012 or SI-914-014, ”Routine modification of the Bing constant depression carburetor”, latest issue.

The fuel supply must be closed off before the carburetors are removed for closer inspection. Collect any fuel spilt during disassembly and dispose of it in an ecological manner.

d05738

3.3.2) Float needle valve leakage test

See Fig. 73-12.

This check is carried out to ensure that the float valve seat is not leaking. If the pressure is not maintained, pay particular attention during disassembly to the float valve with the viton tip and the carburetor housing.

Turn the carburetor upside down, as the float needle valve is only closed in this position.

Connect pump (1) to the fuel supply line (2) and apply approx. 0.4 bar (5.8 p.s.i.) of pressure.

The pressure must be maintained for about 5 seconds.

■ CAUTION: If pressure drops, this indicates leakage which may cause fuel overflow and in consequence engine damage due to hydraulic shock.

Replacement of the float valve seat is not permissible.

Fig. 73-12

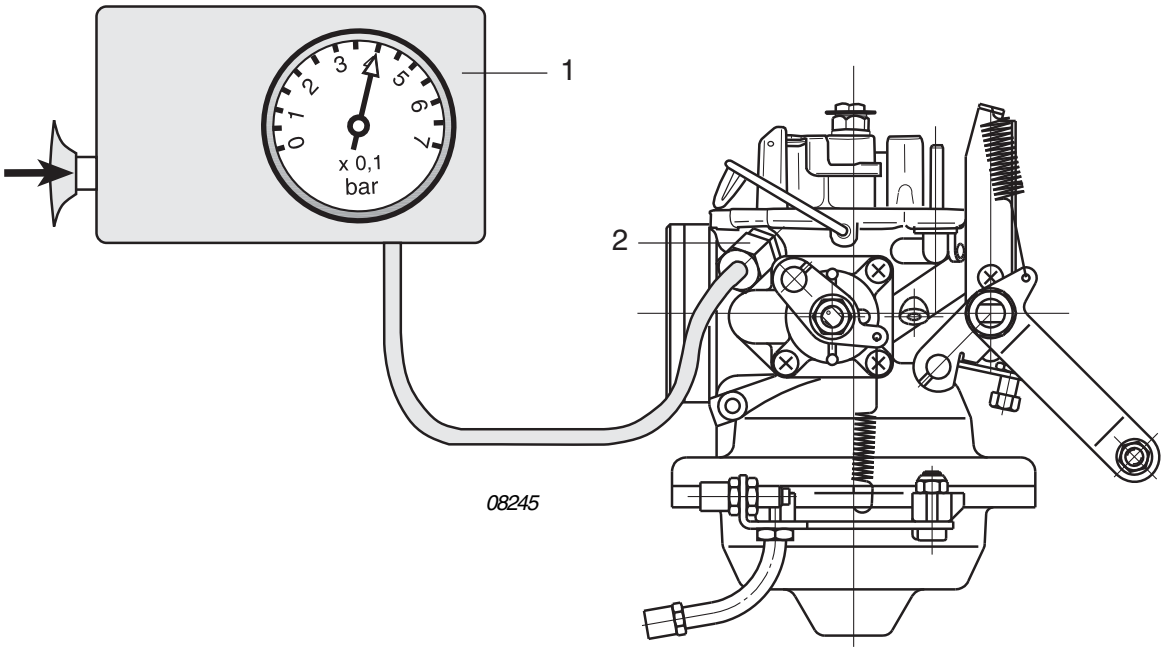

d04777

3.3.3) Individual components of the carburetor (on the 912 Series)

See Illustrated Parts Catalog Rotax 912/914

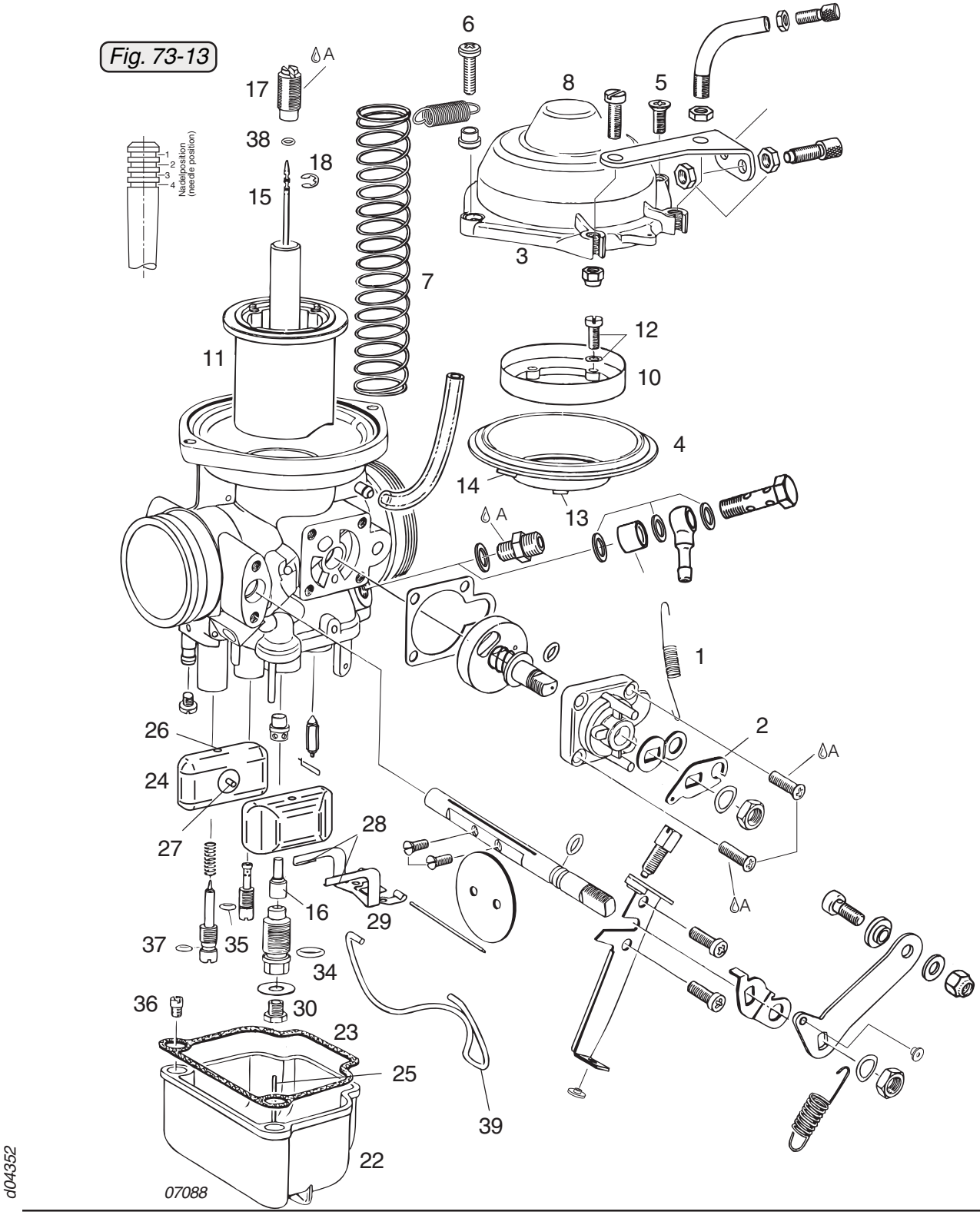

3.3.4) Individual components of the carburetor (on the 914 Series)

See Illustrated Parts Catalog Rotax 912/914

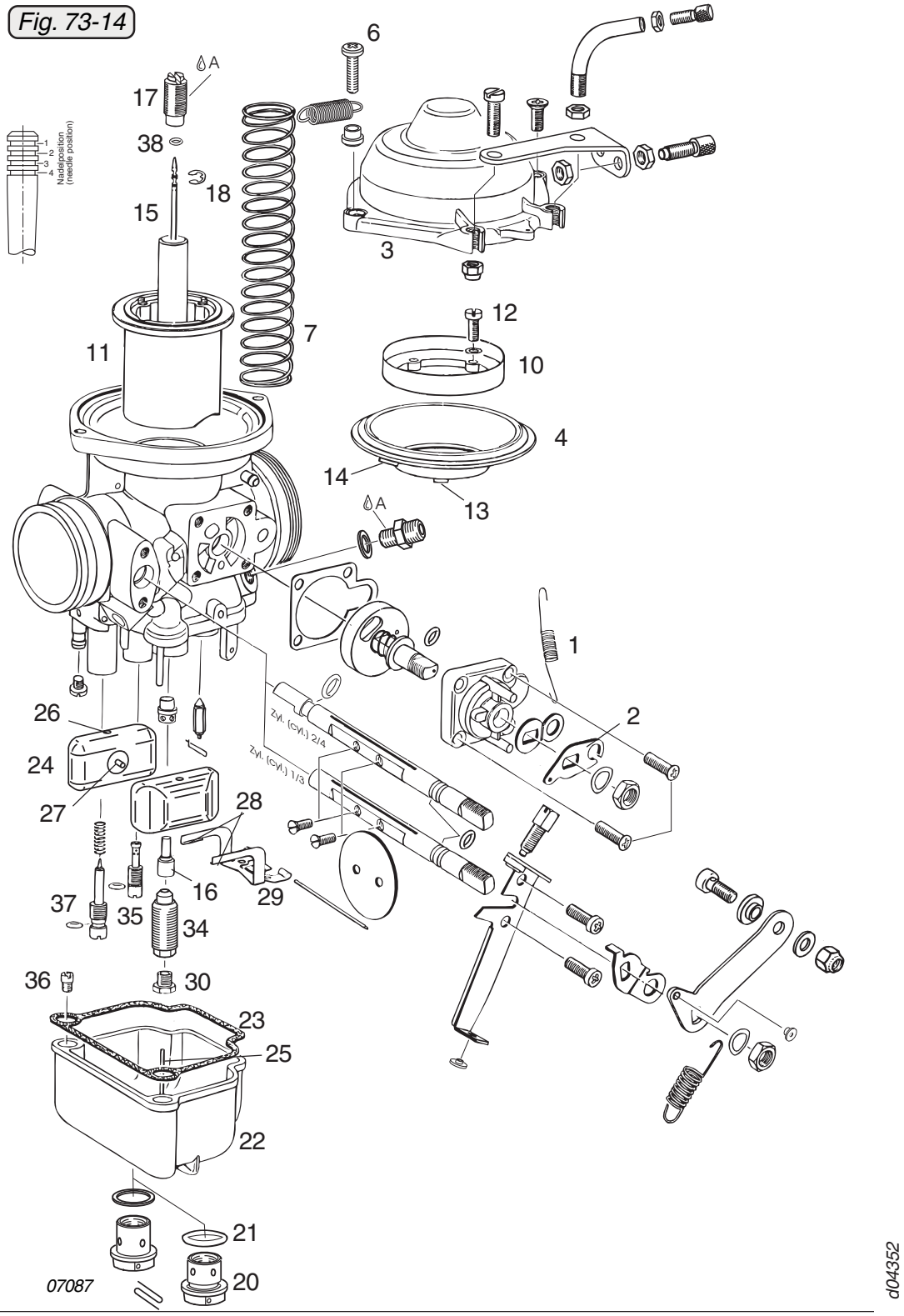

3.3.5) Diaphragm

See Figs. 73-15 and 73-16.

The plunger (carburetor piston) (8) is attached to the diaphragm (6). Depending on the pressure prevailing, the plunger is moved up or down. For inspection, remove the two counter sunk screws (1) M5x12, take off the chamber top (2) and remove the plunger spring (3). Check that the cover plate (4) on the chamber top is tightly seated. Wash chamber top with cleaning agent and blowclean the inside venting bore with compressed air Then carry out a visual inspection.

Pull carburetor piston out of the carburetor housing and remove the 4 allen screws (5) M4x12. The diaphragm (6) is held by the retaining ring (7) on the carburetor piston (8). The position of the carburetor piston is controlled via the diaphragm. There are 2 indexing tabs on the diaphragm (5). Tab (9) fits exactly into the recess in the slider piston and nose (10) must engage in the recess in the carburetor housing.

Check diaphragm for cracks or brittleness, replace if necessary.

3.3.6) Needle

See Fig. 73-16.

The needle (12) controls the fuel consumption at part load. It can be regulated by selecting a needle position between 1 and 4.

Unscrew the retaining screw (11), check needle (12) with shaft securing (13) and O-Ring (20) for signs of wear.

Pay especial attention to the grooves and the taper of the needle. If there is visible wear, the needle must be replaced and a new one refitted in the same position. The needle jet must be replaced along with the needle as it will also be worn.

◆ NOTE: The needle must move freely when fitted.

Carry out a visual inspection of the outer diameter of the carburetor piston (8) and the two inside compensation bores.

◆ NOTE: The needle is damped by the O-ring (38). See Figs. 73-13 and 73-14.

Fig. 73-15/2 shows the factory-setting of carburetor jetting and jet needle position. The jet needle position depends on the emmision and specific fuel consumption.

All other settings must be recorded in the engine logbook.

d05738

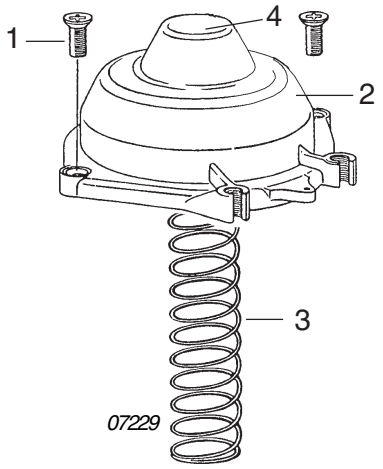

Fig. 73-15

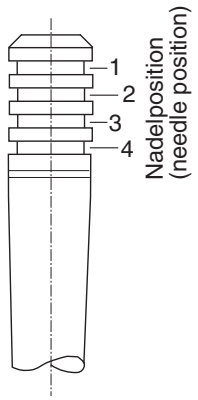

Fig. 73-15/1

Carburetor calibration		
912 A/F/UL	**Target**	
	Carburetor 1/3	Carburetor 2/4
Needle	2,72	2,72
Idle jet	35	35
Main jet [4]	155 or 158	155 or 158
Start jet [1]	85	85
Needle position [3]	3	3
912 S/ULS/ULSFR	**Target**	
	Carburetor 1/3	Carburetor 2/4
Needle	2,70	2,70
Idle jet	35	35
Main jet	155	155
Start jet [1]	85	85
Needle position [3]	3	3
914 F/UL	**Target**	
	Carburetor 1/3	Carburetor 2/4
Needle	2,72	2,72
Idle jet	35	35
Main jet [2]	156 or 160	158 or 164
Start jet [1]	85	85
Needle position [3]	1 or 2	2

Fig. 73-15/2

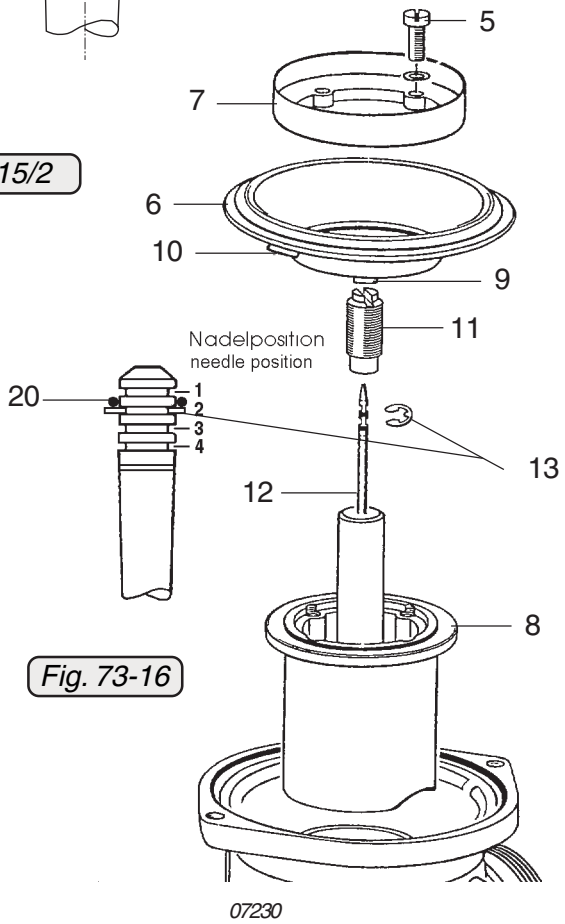

Fig. 73-16

[1] See SI-03-1998, latest version.

[2] Depending on the airbox version. See SI-914-013 and SI-914-015, latest version.

[3] Depending on CO measurement value and specific fuel consumption. See SI-914-013 and SI-914-015, latest version.

[4] On configuration with air filter. See SB-912-044, latest version.

d04352

3.3.7) Float chamber, floats

See Figs. 73-17, 73-18, 73-19 and 73-20.

On the 912 Series: Release the spring clip (39). See Fig. 73-13.

On the 914 Series: Remove the safety wiring and the end screw (1) with the sealing ring (2) 16x22x1. Tightening torque 5.5 Nm (48.7 in.lb)

Remove and clean the float housing (11) with the seal (12).

Check both floats (9) for free movement on the guide pin (3). When the float is at its lowest position, it still must have radial clearance and must not stick on the float chamber wall (10).

■ CAUTION: A stuck float causes the carburetor to flood.

Check the wear on the guide sleeves (5) inserted in the float. Check the pins (6) for the float support (7) for wear caused by excessive vibration. If there is noticeable wear, replace both floats and if necessary also the float brackets (8).

Fig. 73-17

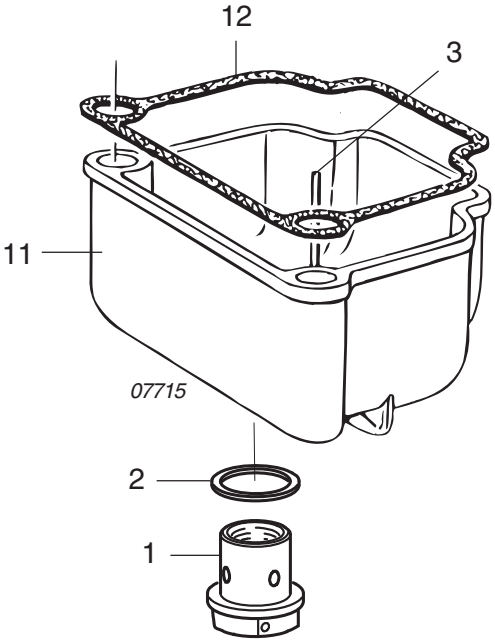

Fig. 73-18

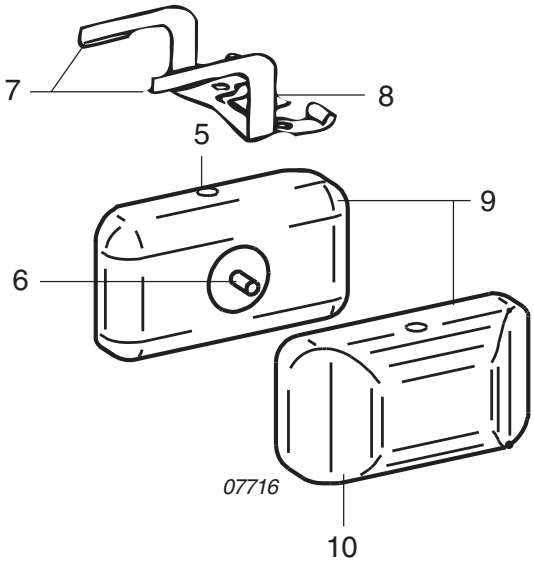

d04777

3.3.8) Float brackets

See Figs. 73-18, 73-19 and 73-20.

Check that the float suspension brackets (8) are parallel. To do so, remove main jet and attach the gauge (13) to the mixing tube with a hex. screw (14). When the needle valve is closed, the two arms (15) of the float bracket must be evenly spaced.

Spacing:

On the 912 Series: 0.4 to 0.5 mm (.016 to .02 in.)

On the 914 Series: 5.4 to 5.5 mm (.21 to .22 in.)

Always replace float brackets together with the float needle valve.

If there is a noticeable fault, the float bracket can be bent for correction or be replaced. After the check, remove the gauge and refit the main jet.

3.3.9) Carburetor jets

Fig. 73-19

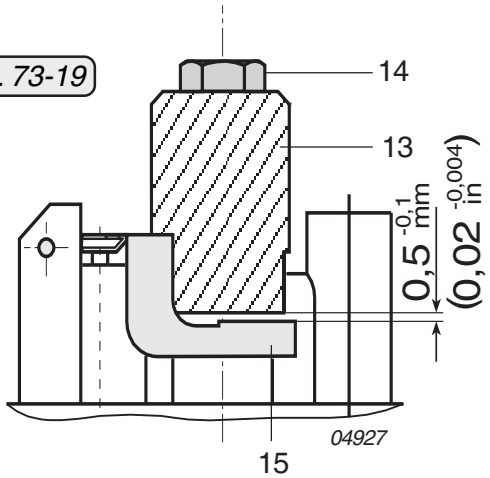

Fig. 73-20

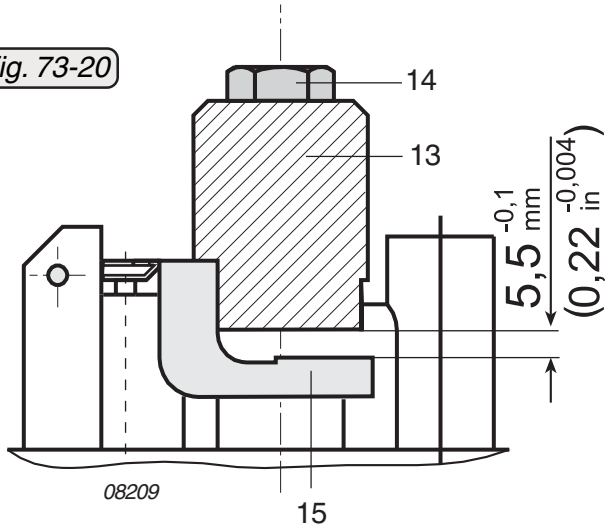

d05738

See Figs. 73-21 and 73-22.

■ CAUTION: Always maintain high standards of cleanliness when performing any work on the carburetor.

Remove the float chamber. Unscrew the main jet (14), the mixing tube (15), the needle jet (16), the idle jet (17), the starting jet (18) and the idle mixture screw (19). Clean carburetor and jets with gasoline. Carefully blow through all jets channels in the carburetor housing with compressed air and check for free passage.

Check oval form of inner diameter of needle jet (16), replace if necessary. Check for correct jetting. See corresponding Illustrated Parts Catalog.

▲ WARNING: Any adjustments to the main and idle jets may only be performed in accordance with BRP-Rotax instructions, by an aviation facility or an authorized tester.

◆ NOTE: If rough engine running at idle speed occurs and the spark plug is sooted, change the idle jet from LD35 to LD30. Alle changes must be recorded in the engine logbook.

Fig. 73-21

912 Series

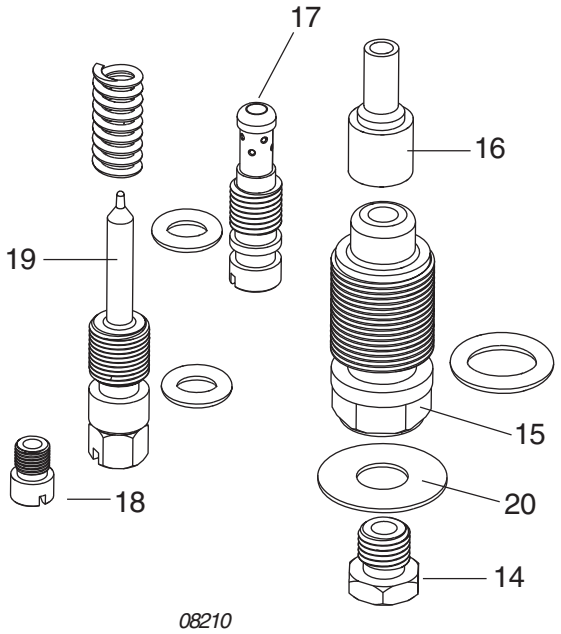

Fig. 73-22

914 Series

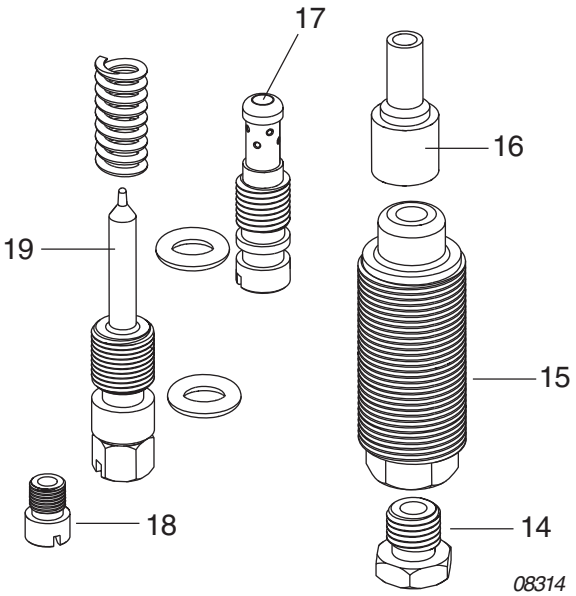

d05738

3.3.10) Float needle valve inspection

See Fig. 73-23, 73-24.

Remove the float chamber. Remove the bearing pin (4) of the float bracket (5) and pull out the float needle.

Check fuel inlet for free passage.

Inspect the viton tip (1). Inspect clip end for visible wear to the beaded edge (2) of the sprung pin (3), the valve must be replaced. If the distance becomes less than 0.5 mm (.02 in.), the float level will be affected, leading even to interruption of the fuel flow.

Insert float valve into the valve seat.

Engage float valve clip into float bracket, place it in position and fix float bracket with pin.

Replace the float chamber and fix with spring clip.

◆ NOTE: In addition to this information, also observe the Service Bulletins SB-912-048 and SB-914-033, ”Replacement of pin in carburetor”, latest issue.

Fig. 73-23

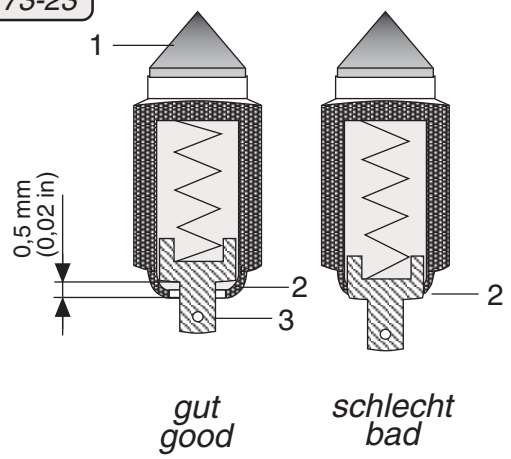

04928

Fig. 73-24

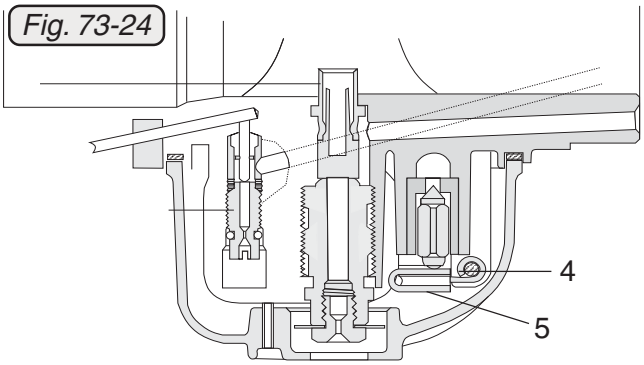

00026

d04352

3.3.11) Starting carburetor (choke)

See Figs. 73-25, 73-26 and 73-27.

Remove 4 countersunk screws M4x14 and remove the complete rotary disc valve housing.

◆ NOTE: The shafts for the rotary disc valve have two markings, L and R. The shaft marked R is for the carburetors for cylinders 2/4, the shaft marked L for the carburetor for cylinders 1/3. Fig. 73-25 shows the positions of the markings on the choke shaft.

Remove hex. nut and pull the complete rotary disc valve from the housing. Clean all parts and check.

◆ NOTE: The choke shaft (1) is marked with a dot (2). This mark must point towards the cable engagement (3) or to bore (4).

Clean all parts and blow out all bores and ducts with compressed air. Check all parts and replace any defective ones.

◆ NOTE: SI-03-1998 ”Engine start at low temperatures”, latest issue can be carried out to improve cold starting performance.

Fig. 73-25

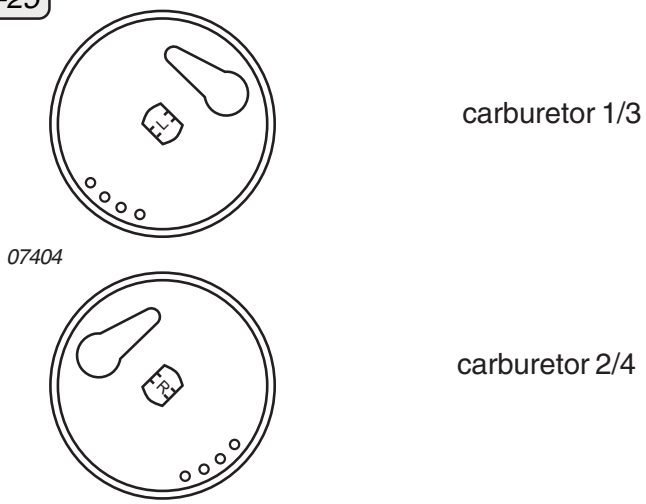

3.3.12) Carburetor assembly

The carburetor with new O-rings and gaskets is assembled in reverse order.

d04352

the drawings show the carburetor for cyl. 2/4

Fig. 73-26

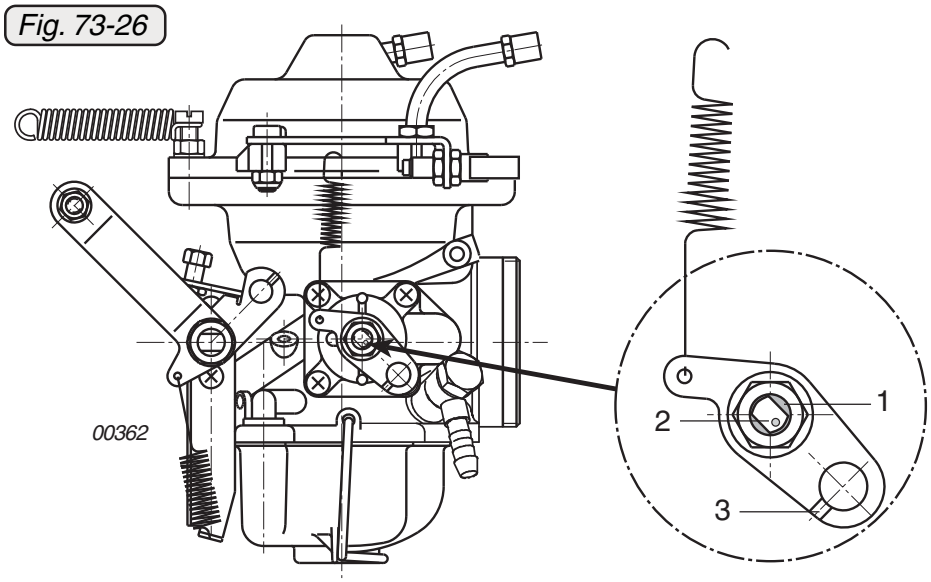

Fig. 73-27

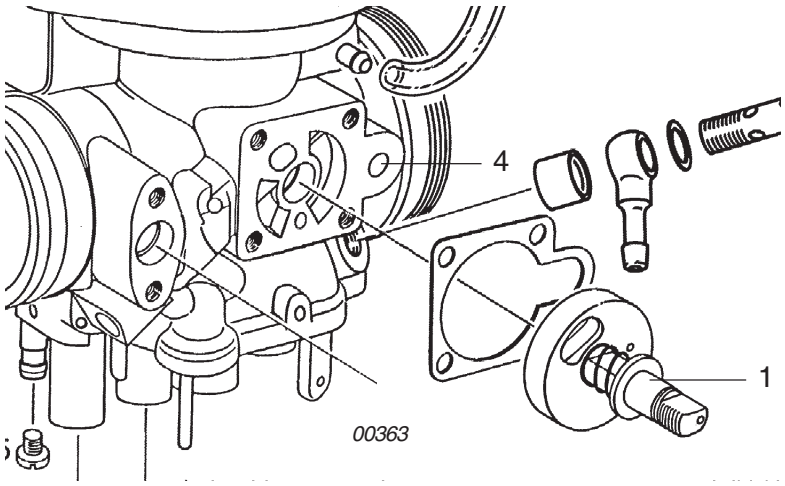

d04352

3.3.13) Carburetor synchronization

See the corresponding section in the respective Maintenance Manual (Line Maintenance) for the engine type, 912 Series or 914 Series.

3.3.14) Idle speed adjustment

See the corresponding section in the respective Maintenance Manual (Line Maintenance) for the engine type, 912 Series or 914 Series.

3.3.15) Throttle cable and linkage

See the corresponding section in the respective Maintenance Manual (Line Maintenance) for the engine type, 912 Series or 914 Series.

3.4) General information on the fuel system

The most common reason for engine failure is a fault in the fuel system. Many problems can be prevented by regular checks. Contamination and formation of condensate can lead to erratic engine running or misfiring.

- Check float chamber for dirt and water.
- In the event of serious contamination or water, drain, clean and flush the whole fuel system thoroughly, including the tank, filter, fuel pumps, float housing and fuel lines.

■ CAUTION :

- Unsuitable routing of fuel lines may cause engine failure.
- After repair work, the fuel system must be checked for leaks.
- Always use clean and non-translucent, safety approved fuel containers. Do not smoke, do not allow open flames or sparks in the vicinity.
- Never refuel with engine running.
- Do not fill the tank to the brim, allow for expansion of the fuel.
- Remove spilt fuel immediately, dispose of it respecting environmental regulations.
- Gasoline is highly inflammable and under certain conditions explosive. Handling of fuel in well ventilated places only.
- Close fuel cock, as the float needle valve may not retain the fuel pressure over a longer period or during transport of the aircraft.

d04352

3.4.1) Fuel pressure (on 912 Series)

See Fig. 73-28.

The pressure inside the fuel system must not exceed 0.4 bar (5.80 p.s.i). Normally, it will lie between 0.15 (2.18 p.s.i) and 0.3 bar (4.4 p.s.i). The fuel pressure tester, part no. 874230, can be used to measure the pressure and check the correct functioning of the fuel system.

Installation of the fuel pressure testing device

Connect the pressure gauge (1) with the hose (2) to the 4-fold nipple (3) instead of the fuel return line. Fit the pressure gauge where it can be easily observed by the operator of the ground test run.

■ CAUTION: Make sure there is no danger that the pressure gauge and hose will get drawn into the propeller airstream. If necessary, secure with tie wraps.

If the nominal fuel pressure values are not met during the test run, stop the engine and start with the trouble shooting procedure.

▲ WARNING: No aircraft take-off before an obvious fault has been found and eliminated!

■ CAUTION:

- Fault free operation of the carburetors cannot be guaranteed if the fuel pressure is below 0.15 bar (2.18 p.s.i)or above 0.4 bar (5.80 p.s.i) l. If the minimum required fuel pressure cannot be achieved, it is necessary to use an additional electric fuel pump.
- There must be a suitable fuel filter with 0.1 mm (0.004 in.) mesh size between the fuel tank and the fuel pump. Do not use paper filters.
- Select fuel lines in accordance with national aviation regulations. They should have a minimum crosssection of 5 mm (0.2 in.).
- The tank must be fitted with a fuel cock (with a screen) to allow immediate interruption of the fuel supply at any time.

d04352

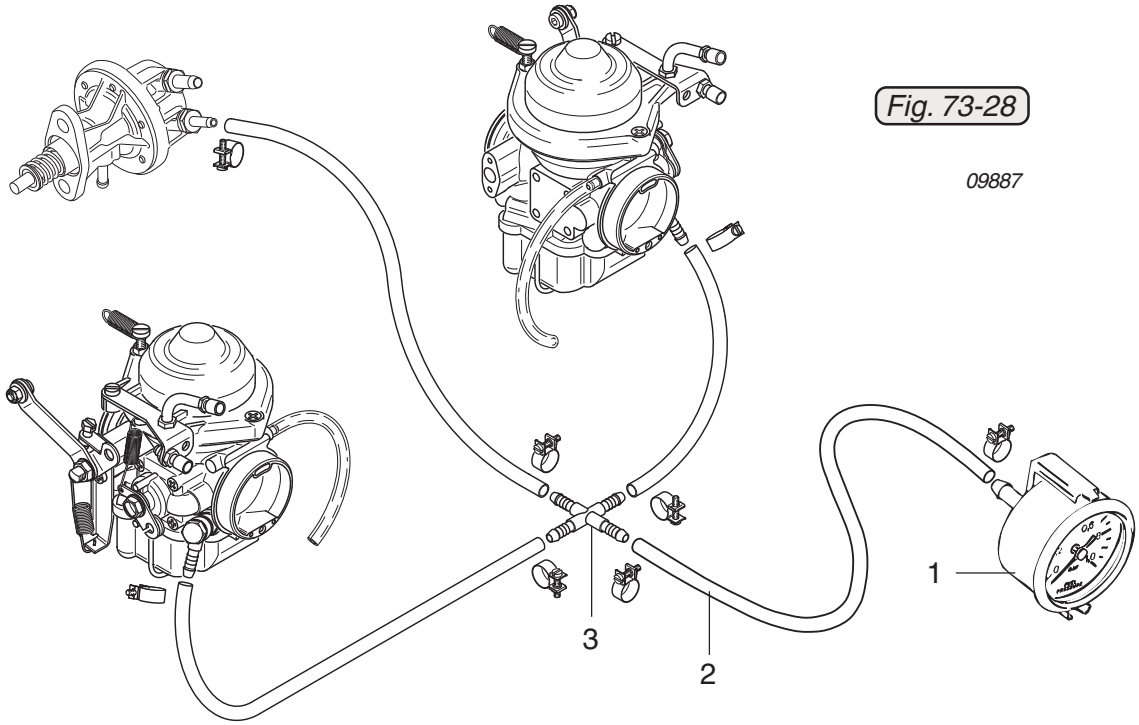

Fig. 73-28

09887

d05738

3.4.2) Fuel pressure (on 914 Series)

There is no specific connection on the engine for reading the fuel pressure. However, it makes sense to take fuel pressure readings for monitoring purposes and for troubleshooting.

See latest installation manual for the respective engine type. All the necessary items are available as spare parts.

■ CAUTION: **The fuel pressure must be approx. 250 hPa above the constantly varying boost pressure in the "air-box".** Otherwise the perfect functioning of the carburetors is not assured. See 73-00-00 sec. 2.

Fit the pressure gauge where it can be easily observed by the operator of the ground test run.

■ CAUTION: Make sure there is no danger that the pressure gauge and hoses will get drawn into the propeller airstream. If necessary, secure with tie wraps.

▲ WARNING: No aircraft take-off before an obvious fault has been found and eliminated!

If during the test run the nominal fuel pressure values are not met, shut down engine and start with the trouble shooting procedure.

d04352

3.4.3) Carburetor sockets and compensation tube

See Figs. 73-29/1, 73-30, 73-31 and 73-32.

3.4.3.1) Carburetor socket

The carburetor attachment on the engine is designed to ensure that it can be securely fixed to the intake manifold with carburetor sockets (1). See 73-00-00 sec. 3.1.

In addition to chemical strain due to fuel and UV radiation, the carburetor socket is also subject to stress as a result of vibration. Tightening the attachment clamp (2) too firmly can also cause damage to the sockets and distance sleeve (3). Tightening torque 2.5 Nm (22 in.lb).

Compress carburetor socket in the area of the carburetor connection to allow easier detection of existing cracks (4) and (5). Also pay particular attention to the area of the inner diameter (6).

▲ WARNING: If cracks are suspected, fit a new carburetor socket. See SB-912-030 and SB-914-019,"Cracks, wear and distortion on the carburetor flange", latest issue.

3.4.3.2) Compensation tube

See Fig. 73-29.

To simplify carburetor synchronisation a new compensation tube (7) has been introduced. See therefore the latest issue of SI-912-020 and SI-914-022 "running modifications" respectively.

Normally it is not necessary to unmount the compensation tube, should this however be necessary, then the springs (8) have to be unhinged and the hose clips (9) have to be loosened. The hoses (10) have to be cut for removal.

d04352

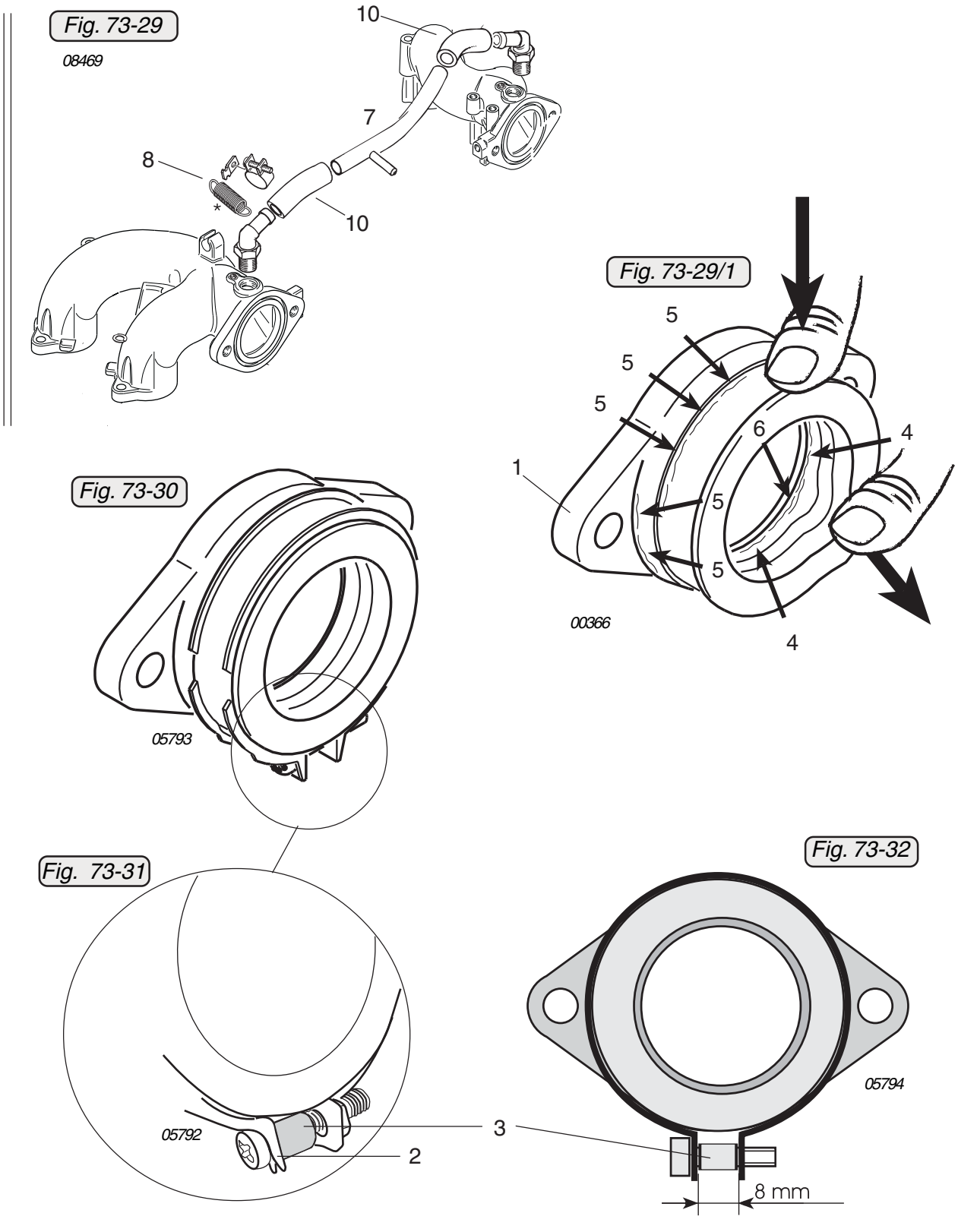
Fig. 73-29
08469
10
7
8
10
Fig. 73-29/1
5
5
5
6
4
1
5
5
00366
4
Fig. 73-30
05793
Fig. 73-31
05792
3
2
Fig. 73-32
05794
8 mm
d04352

3.4.4) Fuel pressure regulator (only on 914 Series)

See Fig. 73-33.

Carry out a visual inspection of the fuel pressure regulator (2).

◆ NOTE: All new fuel pressure regulators are calibrated by the engine manufacturer and should not need further adjustment.

However, if this should become necessary, there is an adjustment screw (4) on the bottom side of the regulator.

Set ignition switch for both ignition circuits to “OFF” position. Switch on the electric fuel pump, set to the correct fuel pressure (approx. 250 hPa above the airbox pressure) using the adjuster screw (4) and tighten with the cap nut (5) to a tightening torque of 5 Nm (45 in.lb).

◆ NOTE: Apply LOCTITE 243 to the thread.

■ CAUTION: The fuel pressure regulator must not be disassembled, as there are no spare parts available. If necessary, replace the complete regulator.

The fuel pressure regulator is attached to the airbox with hex. screws M6x16 and lock washers. Tightening torque 8 Nm (70 in.lb).

■ CAUTION: Failure to tighten the cap nut will result in a pressure drop in the fuel system, which can cause engine damage.

Fig. 73-33

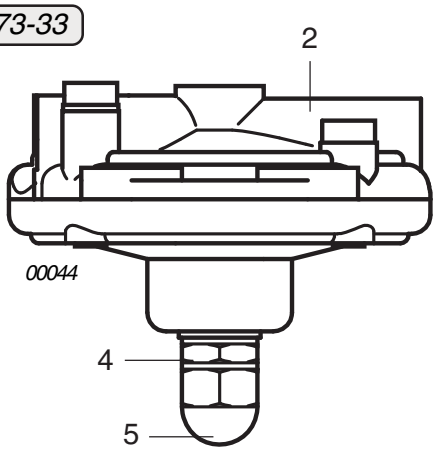

d04352

3.4.5) Fuel pump (on 912 Series)

See Figs. 73-34/1,2,3 and 73-35.

Depending on the engine configuration, it may already have been fitted with a pump with fuel hoses, see Fig. 73-9.

On engines without fuel hoses, observe the aircraft manufacturer's instructions.

Check fuel hoses for scuffing marks and kinks.

3.4.5.1) "AC" fuel pump

In the event of damage of the old pump part no. 892546, the complete pump with all the hoses must be replaced, as the hoses are pressed in one piece with the pump.

Check pump flange (1) for planeness. If the pump plunger (2) shows scuff marks, the pump must be replaced and the eccenter in the propeller gearbox inspected. Check the connections (3) of the fuel lines.

Pumps working at reduced power, for example as a result of contaminated valves or leaking diaphragms, must be replaced.

◆ NOTE: A leaking diaphragm can be detected by the fuel emerging from the ventilation holes (4).

◆ NOTE: A slight leakage on the venting line (7) fuel pump part no. 893110 can be attributed to a slight "sweating". For a period of 1 minute after the engine has been stopped, no liquid must drip down.

In case of uncertainty determine the oil amount. An oil leak is when after 20 min engine run more than 0.5 ml of oil loss is detected.

The fuel sucked in is filtered by a fine screen integrated in the pump. It is not possible to dismantle the fuel pump. If contamination of the fuel pump is suspected, the pump must be inspected on the intake side (5) using an endoscope.

◆ NOTE: The consecutive (6digit) serial number is displayed on the pump housing (6).

◆ NOTE: Service Bulletins SB-912-049 "Checking eccenters and fuel pump plungers", latest issue must be observed.

d05738

Fig. 73-34/1

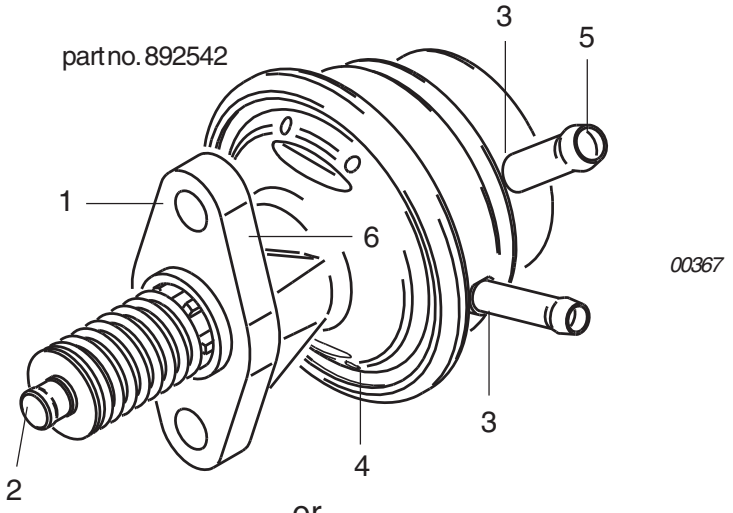

Fig. 73-35

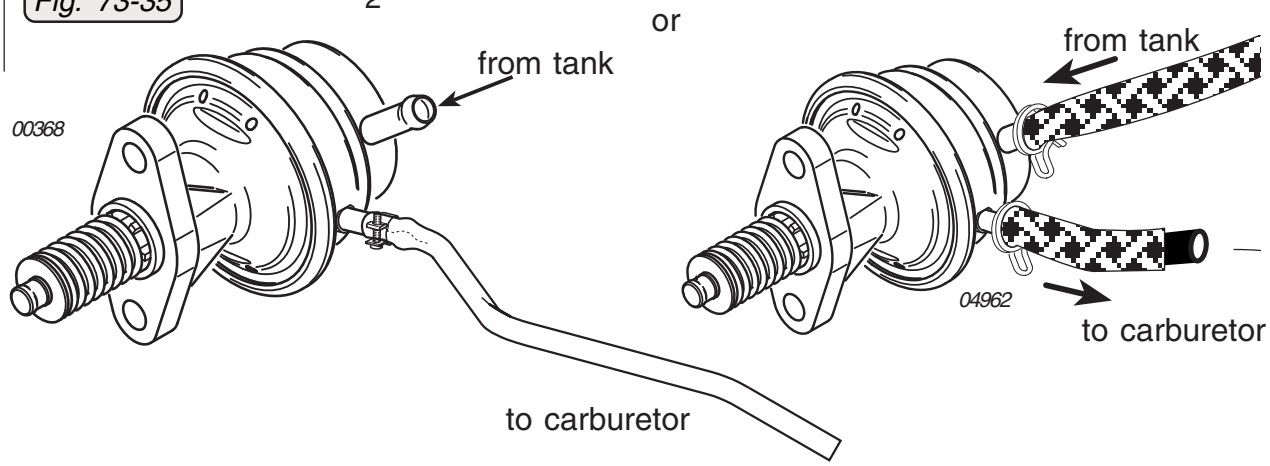

3.4.5.2) "BCD" fuel pump

In the course of continuous development a new fuel pump part no. 893115 has been introduced. The fuel pumps part no. 893110 (without hoses) and part no. 893114 (with hoses) can be configured with corresponding hose nipples and fuel hoses. See table 1 and table 2 below.

Table 1

Fuel pump part no. 893110 includes the following parts:		
part no.	quantity	description
893115	1	Fuel pump assy.
950228	1	Insulating flange
631870	1	O-ring
840740	1	Nipple 7/3,8 (pressure line)
840745	1	Nipple 9/5,7 (suction line)
250425	2	Gasket ring 10,2/15/1,5

d05738

Table 2

Fuel pump part no. 893114 includes the following parts:		
part no.	quantity	description
893115	1	Fuel pump assy.
950228	1	Insulating flange
631870	1	O-ring
874337	1	Fuel hose
874347	1	Fuel hose
250425	2	Gasket ring 10,2/15/1,5
840770	1	Screw socket 9/16-18 UNF/M10x1 (pressure line)
840775	1	Screw socket 1/2-20 UNF/M10x1 (suction line)

Retrofitting of fuel pump assy. part no. 893110 to 893115

See Fig. 73-35/1.

Connections to the fuel pump:

Fuel inlet (3):

Hose nipple..... 9/5,7

Tightening torque: 10 Nm (88 in.lb.)

Fuel outlet (2)

Hose nipple..... 7/3,8

Tightening torque: 10 Nm (88 in.lb.)

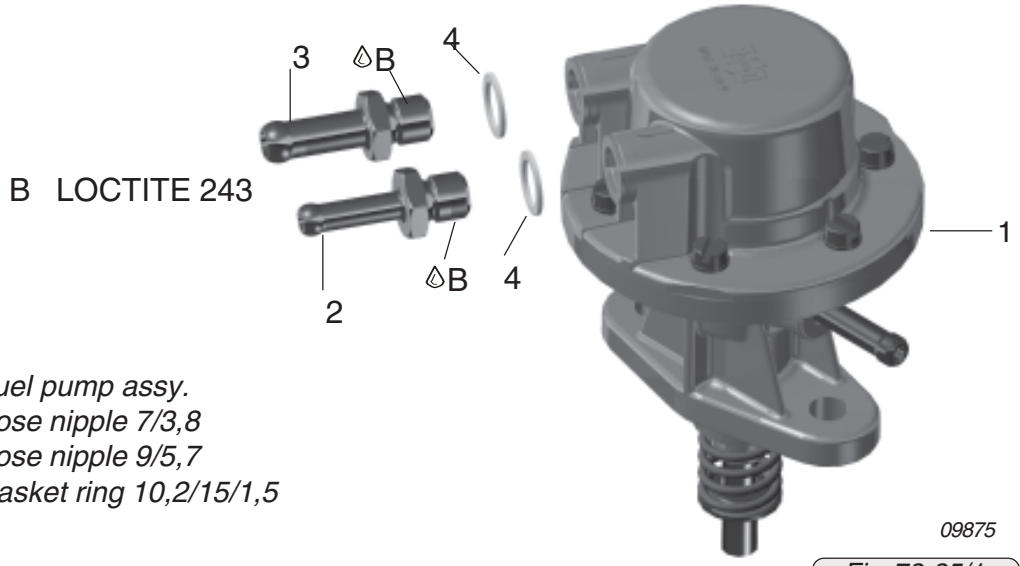

1 Fuel pump assy.
2 Hose nipple 7/3,8
3 Hose nipple 9/5,7
4 Gasket ring 10,2/15/1,5

Fig. 73-35/1

d05738

Retrofitting of fuel pump assy. part no. 893114 to 893115

See Fig. 73-35/2 and Fig. 73-35/3.

Connections to the fuel pump:

Fuel inlet (3):

Screw socket.....1/2-20 UNF/M10x1

Tightening torque: 10 Nm (88 in.lb.)

Fuel outlet (2)

Screw socket.....9/16-18 UNF/M10x1

Tightening torque: 10 Nm (88 in.lb.)

Connection fuel hoses to screw sockets:

Fuel inlet(4):

Fuel hose assy. .....AN6 connection

Tightening torque: 32 Nm (283 in.lb.)

Fuel outlet (5)

Fuel hose assy. .....AN5 connection

Tightening torque: 27 Nm (239 in.lb.)

■ CAUTION: Counter the screw socket when screwing!

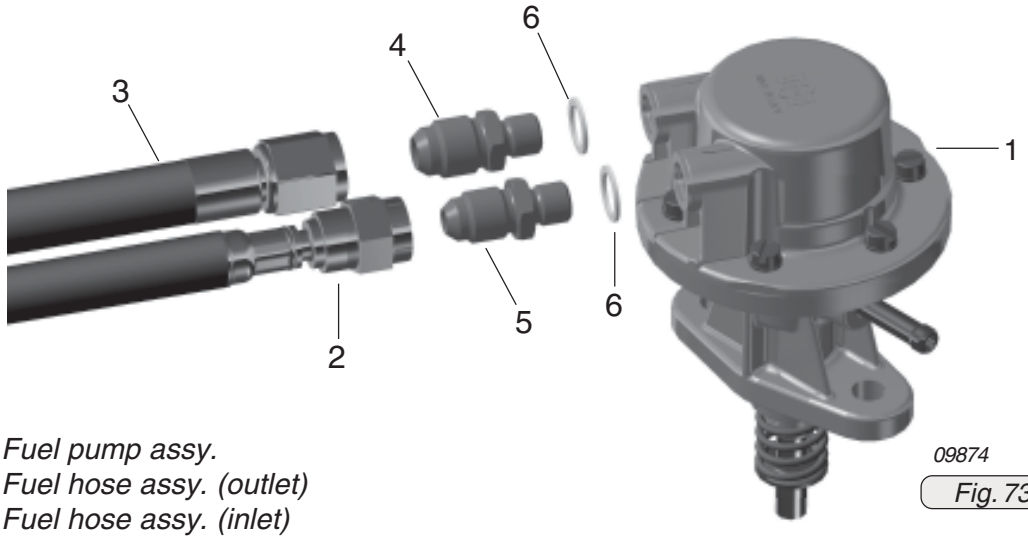

09874

Fig. 73-35/2

1 *Fuel pump assy.*
2 *Fuel hose assy. (outlet)*
3 *Fuel hose assy. (inlet)*
4 *Screw socket 1/2-20 UNF/M10x1 (inlet)*
5 *Screw socket 9/16-18 UNF/M10x1 (outlet)*
6 *Gasket ring 10,2/15/1,5*

d05738

Specific:

Greasing the screw socket thread

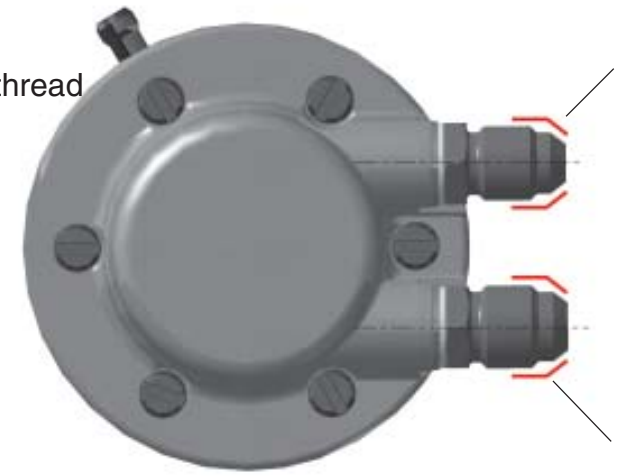

09876
Fig. 73-35/3

◆ NOTE: These fuel hoses are not subject of the 5-year replacement interval and must not be changed.

Installation relevant modifications

See Fig. 73-35/4 and Fig. 73-35/5.

Operating limits

See latest Operators Manual.

Fuel pressure:

max.....0,5 bar*

min.....0,15 bar

* applicable only for fuel pump part no. 893110, 893114 and 893115.

◆ NOTE: In case of an engine exchange or upgrade is has to be noted that also the operating limits must be adapted to the instrument.

Certification to the latest requirements such as FAR or EASA has to be conducted by the aircraft manufacturer. For more informations and related instructions, contact the aircraft manufacturer.

d05738

Version 1

Connections to the fuel pump part no. 893110.

See Fig. 73-35/4.

Fuel inlet (2):

ø Outside dia.....	8 mm (0.315 in.)
Slip-on length:.....	max. 22 mm (0.87 in.)

Fuel oulet (3)

ø Outside dia.....	6 mm (0.236 in.)
Slip-on length:.....	max. 22 mm (0.87 in.)

Drainage (4):

ø Outside dia.....	6 mm (0.236 in.)
Slip-on length:.....	max. 22 mm (0.87 in.)

■ CAUTION: Ensure at installation of the supply line to fuel pump (1) that no additional moments or load will rest on the pump!

■ CAUTION: Utilize max. slip-on length. Secure hoses with suitable screw clamps or crimp. Route all lines without kinks and avoid tight bends.

Version 2

Connections to the fuel pump part no. 893114 using a screw socket on the fuel hose.

See Fig. 73-35/5.

Fuel inlet (2):

Thread (5).....	9/16-18 UNF
Tightening torque:	15 Nm

Fuel oulet (3)

Ring hose nipple (6)	3/4 DIN7642
Tightening torque:	15 Nm

Drainage (4):

ø Outside dia.....	6 mm
Slip-on length:.....	max. 22 mm

■ CAUTION: Route the lines without kinks and avoid tight bends.

d05738

■ CAUTION: Drainage line have to be routed into a ram-air and vacuum free zone, according to the requirements and release of BRP-Powertrain. The drainage line must not be routed into the slipstream. Ram pressure or vacuum impair the fuel pressure.

- The lines have to be routed so that in case of damage the surplus of fuel/oil is drained off suitably.
- Route the lines in a continous decline.
- The lines have to protected against any kind of blockage e.g. by formation of ice.

■ CAUTION: When using an additional electric fuel pump, then a check valve (part no. 874532) with easy opening should be used and installed according to the Installation Manual 912/914.

■ CAUTION: Use the pilot jet (part no. 963820) from the fuel pressure line to the fuel return line (see latest Installation Manual 912/914 Series).

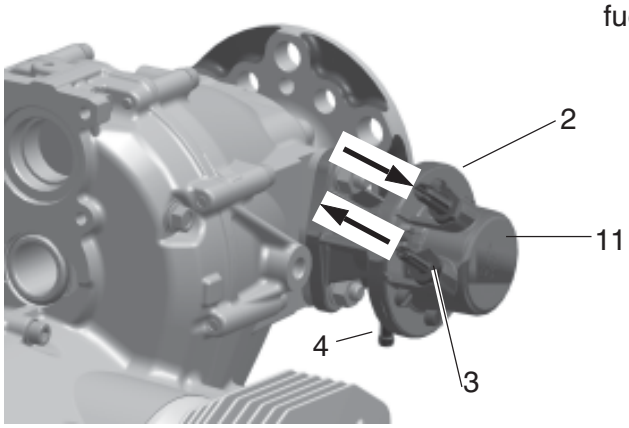

08829

Fig. 73-35/4

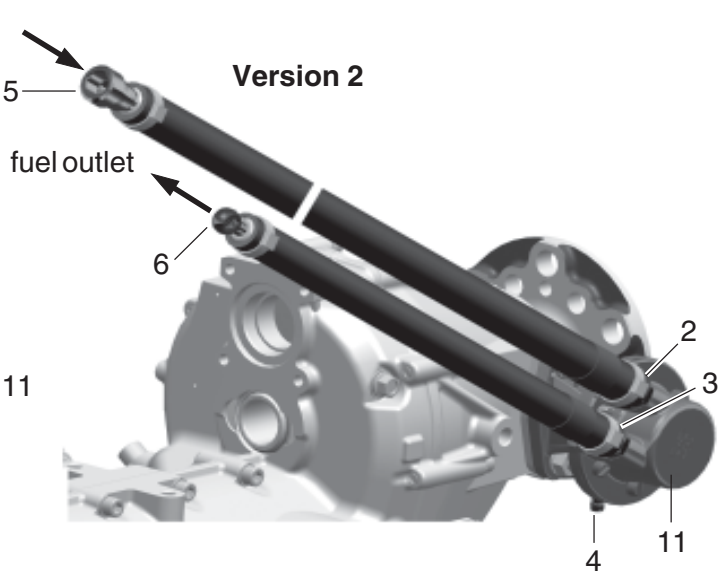

08831

Fig. 73-35/5

d05738

3.4.6) Fuel pump (on 914 Series)

See Fig. 73-36/1 and 73-36/2.

Check the filter in the pumps, see Line Maintenance 12-00-00 sec. 2.10.

If the installation specific fine filter shows a lot of dirt then the filter (1) of the fuel pump also have to be inspected.

Cleaning of the fuel pump integrated filter

■ CAUTION: Don't damage intake connection or filter.

- Use a forceps to carefully pull out pre-filter from the intake connection.

■ CAUTION: Always follow the safety regulations when handling fuel.

- Use fuel to clean pre-filter.

■ CAUTION: Make sure that no material gets into the fuel pump.

- Carefully accommodate the clean filter in the intake connetion.

Perform visual check on fuel pump.

■ CAUTION : It is not possible to disassemble the fuel pump, there are no spare parts available. If necessary the fuel pump has to be replaced.

In the event of a malfunction in the fuel system, the pump performance and/or the current input of the fuel pump can be checked.

With a pressure difference of approx. 250 hPa (3,63 PSI), the fuel pump is pumping at approx. 100 l/h.

The current input at this quantity is approx. 2 A.

◆ NOTE: These figures are reference values.

Fig. 73-36/1

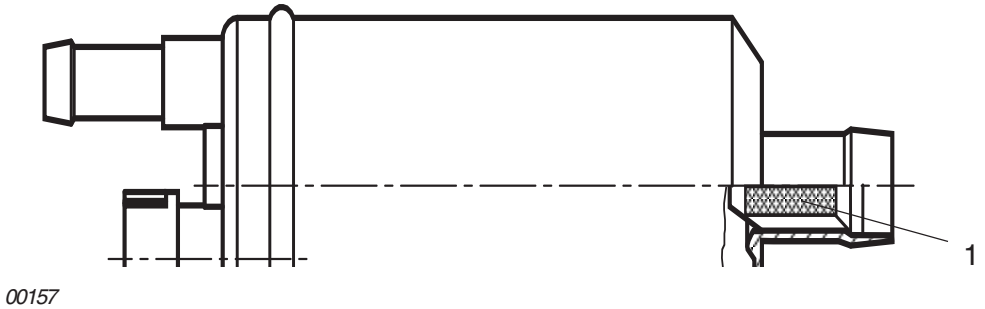

Fig. 73-36/2

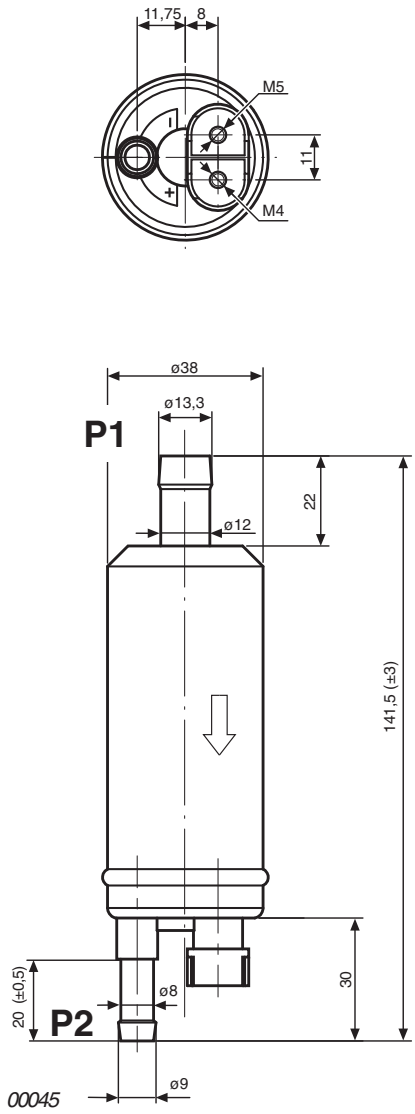

3.4.7) Pressure connecting lines (only on 914 Series)

See Figs. 73-37 and 73-38.

The pressure connecting lines are of essential importance for safe operation of the engine. See also 73-00-00 sec. 2 and the corresponding Maintenance Manual (Line Maintenance) for the respective engine type, 912 or 914 Series.

Check all lines and T-fittings for damage (mechanical, thermal, etc.) and leakage.

■ CAUTION: All lines are secured with clamps. Check them for safety reasons.

d04777

If the lines have been detached or replaced, connect them correctly:

- hose nipple (2) to the T-fitting (3)
- T-fitting (3) to the fuel pressure regulator (4)
- T-fitting (3) to the condensation trap (5) (on older engine configurations)
- condensation trap (5) to the airbox pressure sensor (on older engine configurations)
- hose nipple (6) to solenoid valve (7) ((towards 2-pin electric connector (8))

◆ NOTE: On newer engines the solenoid valve (7) is mounted on the airbox (1). See 76-00-00 sec. 3.1.2.9.

- hose nipple (9) to solenoid valve (7) ((towards electric connector (8) on the opposite side))
- solenoid valve (7) (top connection) to T-fitting (10)
- T-fitting (10) to float chamber venting of carburetor 1/3
- T-fitting (10) to float chamber venting of carburetor 2/4

Secure all lines with clamps 8 (11).

An exception are the 3 lines on the solenoid valve which, due to the shape of the valve, must be secured with clamps 6.8 (12).

The lines to the float chamber venting must be fixed to the fuel lines with tie wraps (13). Do not constrict!

■ CAUTION: Ensure that the total slip-on length is used for all pressure connecting lines and that the clamps are fixed securely.

In addition, all lines must be routed in such a way that scuffing and kinks are avoided. See 73-00-00 sec. 3.4.5 and 73-00-00 sec. 3.4.6.

Reconnect plug connections to temperature sensors and throttle potentiometer.

Check that the plug connections are attached securely.

d05738

Fig. 73-37

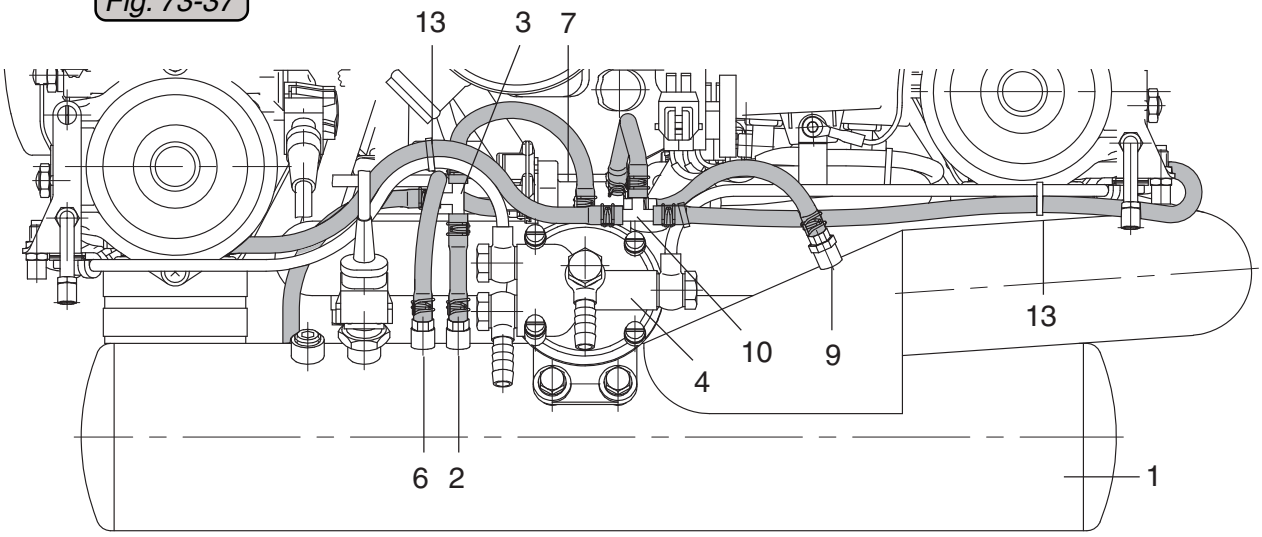

00048

Fig. 73-38

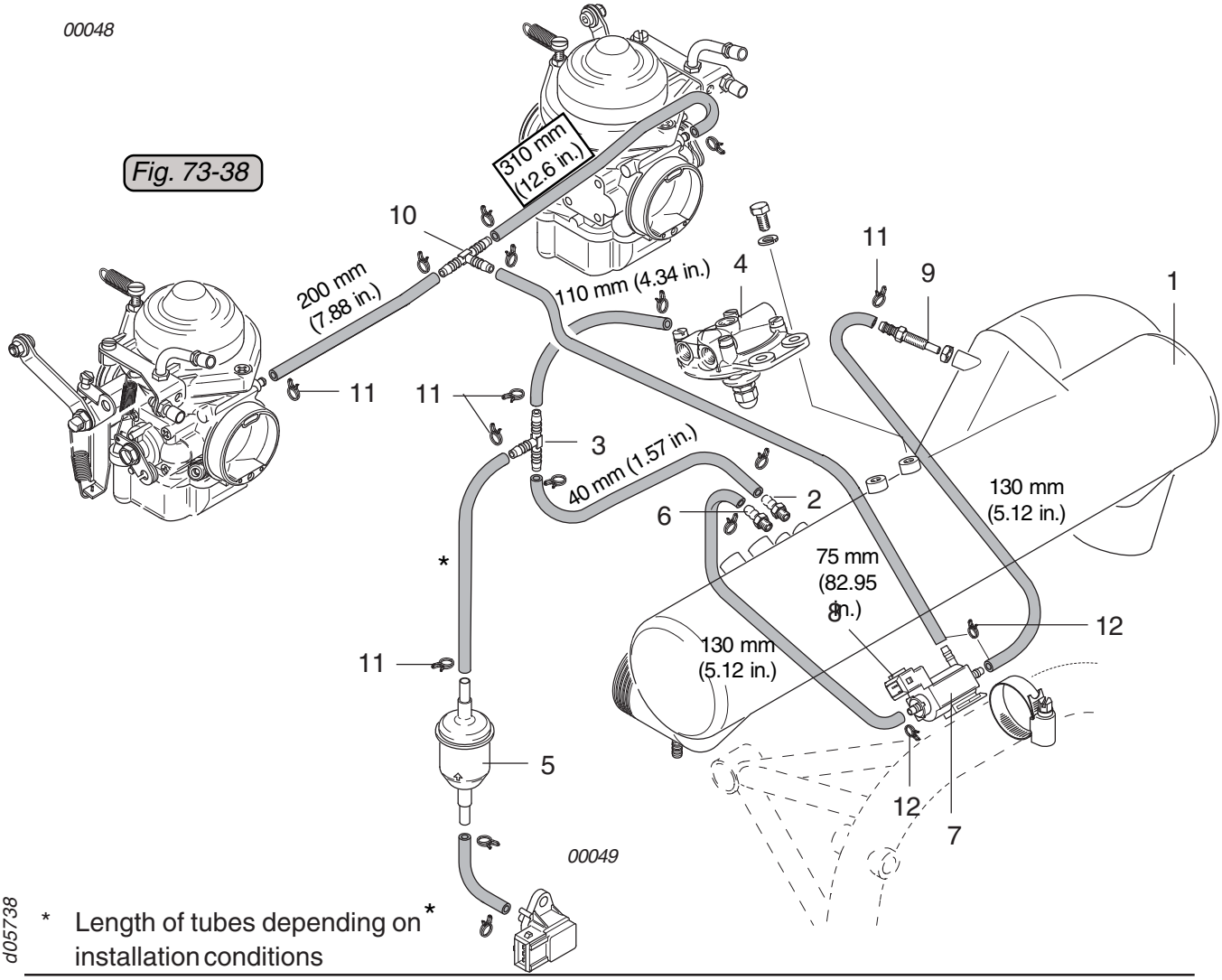

d05738

* Length of tubes depending on installation conditions

3.5) Assembly of fuel pump, carburetor sockets, carburetor and fuel lines

3.5.1) Fuel pump

See Fig. 73-39/1 and 73-39/2.

In addition to the inspection of all fuel lines, if used, the drainage line (12) must be checked for damage, leaks, hardening from heat, porosity, loose connections, secure attachment and routing without kinks and tight bends.

3.5.1.1) Removal of the fuel pump

Loosen hex. nut (9) with lock washer (10) and remove the fuel pump.

3.5.1.2) Inspection of the fuel pump

See Fig. 73-39/1 and 73-39/2.

■ CAUTION: The pump cover (11) must not be opened for inspection. The markings (locking compound) must be inspected.

■ CAUTION: The hose nipples (2,3) must be checked for tightness and leakage. If necessary, the nipples and fuel hoses assy. (13,14) must be removed, cleaned and tightened with a new sealing ring (15) using LOCTITE 243. Tightening torque 10 Nm.

Fuel pressure

The pressure within the fuel system must be max. 0.5 bar. With the new fuel pressure gauge part no. 874234, the pressure and the efficiency of the fuel supply can be inspected.

◆ NOTE: The fuel pressure gauges part no. 874231 and/or 874233 are marked with the usual fuel pressure limit (max. 0.4 bar). At the new fuel pressure gauge part no. 874234 this limit was adjusted accordingly to 0.5 bar.

In coordination with the aircraft manufacturer or national registration authority, a subsequent correction of the limit mark should be possible.

d05738

3.5.1.3) Montage der Kraftstoffpumpe

See Fig. 73-39/1 and Fig. 73-39/2.

■ CAUTION: In addition to the new insulating flange a new O-ring (4) must be used. Do not use the old insulating flange and O-ring!

◆ NOTE: If a new pump was installed,it may occur that during the first time (about 30 minutes) oil leaks from the air vent nipple. This is no leakage of the pump.

◆ NOTE: No sealant is necessary at the sealing surfaces on the gearbox housing and fuel pump flange.

Install fuel pump with new insulating flange (1) and O-ring (4). Secure hex. nut M8 (2) with lock washer A8 (3) with LOCTITE 243 and tighten evenly. Tightening torque 15 Nm.

◆ NOTE: The additional fastening with LOCTITE 243 should be applied to any appointment or re-assembly of the fuel pump and insulating flange.

Re-install fuel lines.

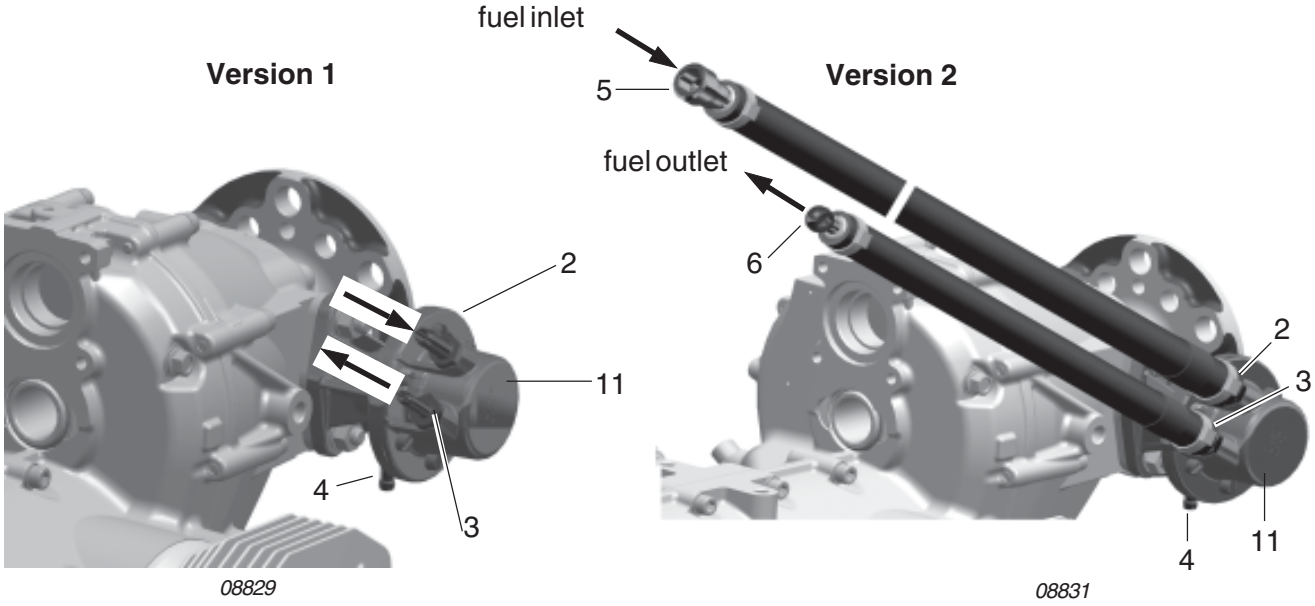

Fig. 73-39/1

d05738

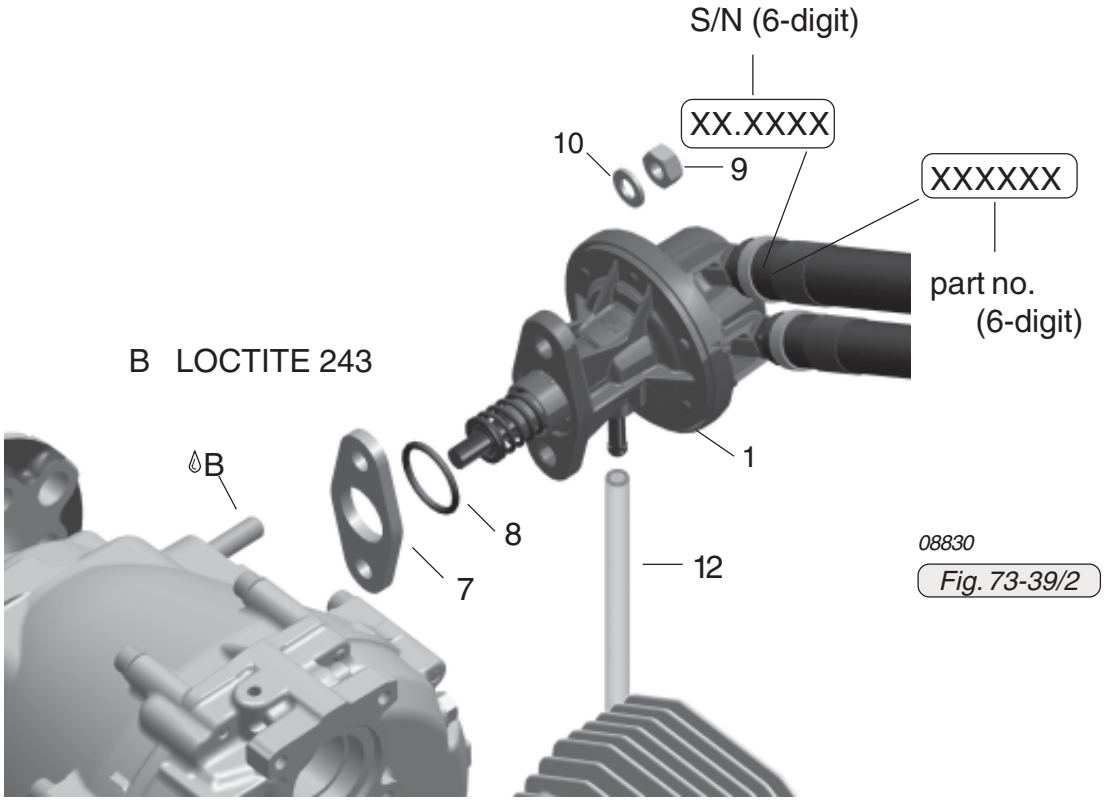

1	*Fuel pump*	7	*Insulating flange*
2	*Nipple (fuel inlet)*	8	*O-ring*
3	*Nipple (fuel outlet)*	9	*Hex. nut M8*
4	*Drainage*	10	*Lock washer A8*
5	*Thread*	11	*Pump cover*
6	*Ring hose nipple*	12	*Drain line*
		13	*Fuel hose assy. (outlet)*
		14	*Fuel hose assy. (inlet)*

3.5.2) Carburetors and carburetor sockets

See Figs. 73-39/1, 73-40 and 76-41.

Attach carburetor socket (4) and new O-ring (5) with hex. screws (6) M8x25 and M8x30 (7) with washers.

◆ NOTE: On intake manifolds without an O-ring groove, a gasket (8) (see Illustrated Parts Catalog) must be fitted.

The screws are locked with LOCTITE 221. Tightening torque 15 Nm (133 in.lb).

Fit carburetor into carburetor socket, which should be **free of grease and oil**, align and fix with hose clamp (9). Tightening torque 2.5 Nm (22 in.lb).

d05738

◆ NOTE: If hose clamp (9) does not have a spacer leave a 7-8 mm (0.27 - 0.31 in.) gap. Do not overtighten as this will damage the socket.

Check distance of 5 to 6 mm (0.2 in. to 0.24 in.) on allen screw (10) as this is important to allow free movement of the tension spring (11).

Engage tension spring in the bracket (12) using a suitable tool.

■ CAUTION: To ensure efficient carburetor suspension, a distance of 40 mm (1.57 in.) between allen screw and engagement latch must be respected.

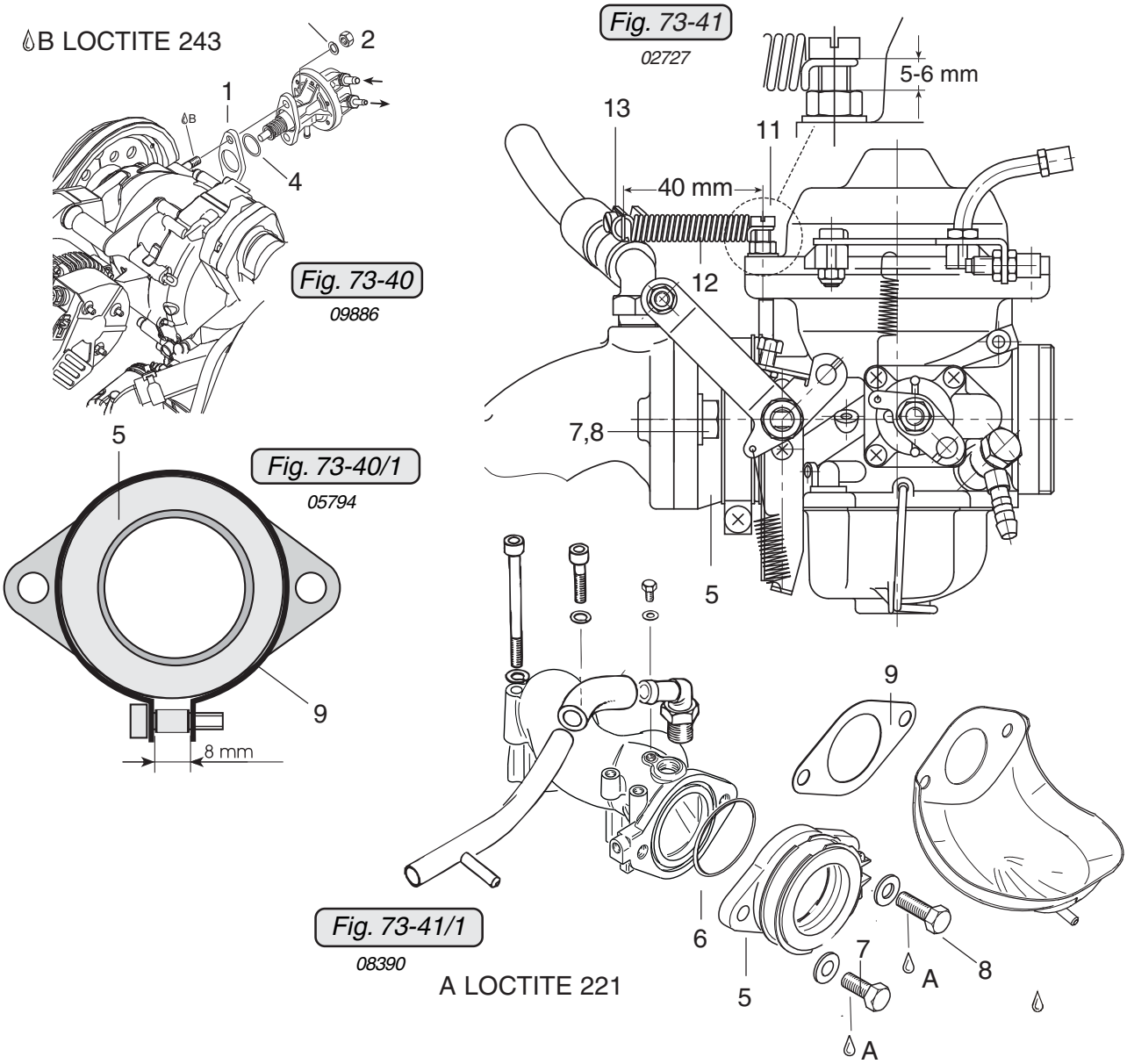

3.5.3) Assembly of the fuel lines (on 912 Series)

See Figs. 73-42, 73-43, 73-44

■ CAUTION: To prevent locked up stresses, all components should first be screwed on loosely and then tightened to the prescribed tightening torque.

If the clamp block (1) has been removed, it must now be reattached with an allen screw M5x16 and a tightening torque of 6 Nm (53 in.lb).

◆ NOTE: For easier assembly of the fuel line, observe the original position of the clamp block.

The lines from the fuel pump (3) and the lines to the carburetors are attached to the **bottom side** of the clamp block, each between a sealing

Fig. 73-42

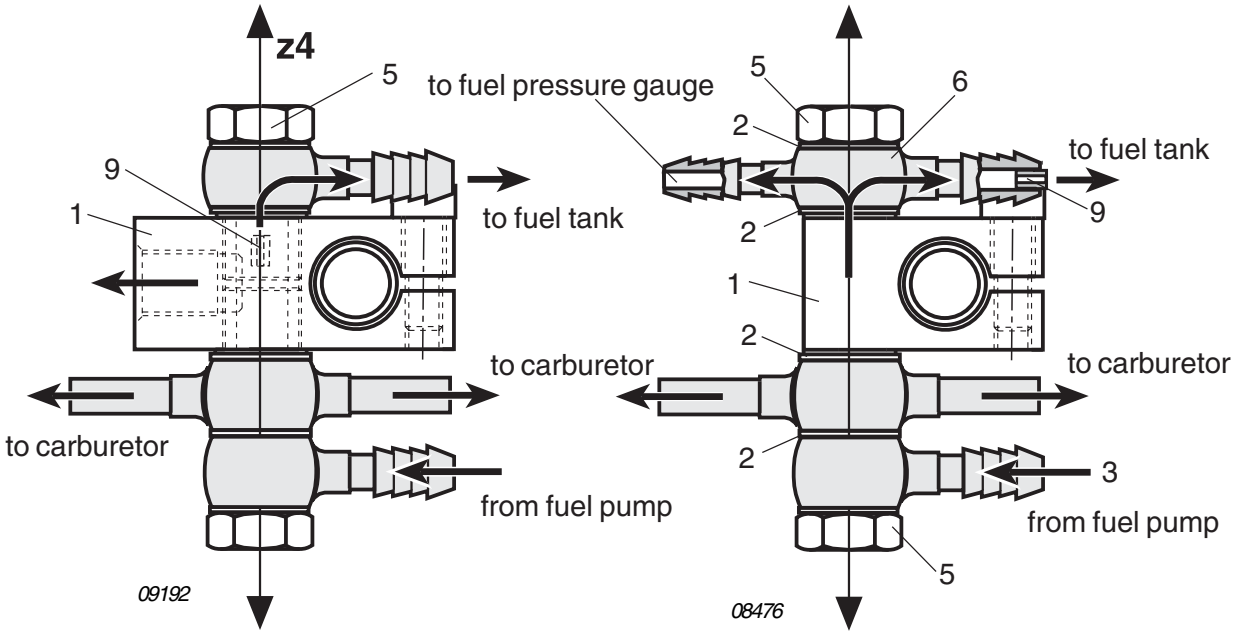

ring (2) and the banjo bolt (5) (tightening torque 10 Nm (90 in.lb)).

The ring hose nipple (6) is attached to the **top side** of the clamp block between a sealing ring (2) and the banjo bolt (5) (tightening torque 10 Nm (90 in.lb)).

– connection for return line to the tank (Ø outside 7mm (0.28 in.))
  slip-on length: max. 17 mm (0.67 in.)
– connection to the pressure gauge (Ø outside 6 mm (0.24 in.))
  slip-on length: max. 17 mm (0.67 in.)

d05738

The double hose nipple (6) is optional.

◆ NOTE: The double hose nipple (6) contains an integrated restrictor (9) (0.35 mm (.0138 in.)) which plays a decisive role in ensuring correct functioning of the fuel system.

◆ NOTE: If no pressure gauge is connected, a single ring hose nipple is fitted. The restrictor (9) is then in the top banjo bolt (5). For recognition the banjo bolt is either marked with yellow color or with the label “FUEL”.

■ CAUTION: Do not get the connections mixed up.

Unscrew allen screw M10x1x8 (11) with the sealing ring (10). Tightening torque 15 Nm (133 in.lb) - screw secured with LOCTITE 221. See Fig. 73-44.

◆ NOTE: When converting to a double hose nipple for measurement of the fuel pressure, the jet must be removed from the banjo bolt (5).

Screw the fuel lines to the carburetors.

Rigid line

◆ NOTE: Do not tighten the clamp block until all lines have been connected.

▲ WARNING: The lines must be fitted without tension and with all the standard in serial supports to prevent breaks caused by vibration during operation.

■ CAUTION: When assembling the fuel lines, ensure that they are adequately supported to prevent strain on the connections. See Fig. 73-43.

◆ NOTE: An optional double hose nipple (6) is available for measurement of the fuel pressure.

Assembly at the carburetor should be carried out analogously the disassembly. See sec. 3.4.4.

d05738

Fig. 73-43

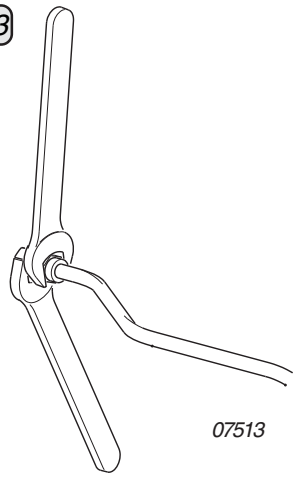

Fig. 73-44

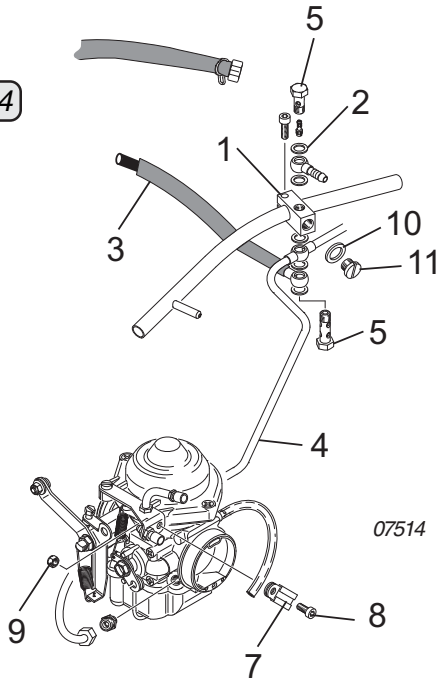

Flexible lines

See Fig. 73-45

See SI-912-020, ”Running modifications”, latest issue.

From 2007 on, all new models will have a flexible line instead of the present rigid fuel line.

Assembly at the carburetor should be carried out analogously the diassembly. See sec. 3.4.4.

◆ NOTE: In case of a retrofit on configurations with steel fuel lines remove the screw connectors (1) and remove remaining sealant residues in a way that they do not get into the carburetor or the fuel system.

For installation on an old style intake manifold perform the following:

- Remove the intake manifold and machine the nut/clamp contact area until the surface is parallel with the sealing surface of the carb socket. The thickness of the material must not be dressed down less than 10,5 mm (0.413 in.) and should be smooth and flat so that the nut/clamp assembly has an even contact surface (see Fig. 73-46).
- Ensure proper support of the flexible fuel line. Install Hex. screw (2) and washer (3) with 15 Nm (133 in. lb.). Install the cable clamp (4) at the hex. screw (2) of the carburetor socket with the hex. nut (5). Tightening torque of hex. nut (5) 24 Nm (18 ft. lb.)

d05738

■ CAUTION: While tightening hex. nut (5), hold hex. screw (2) with a wrench to prevent it from loosening.

Always fix the flexible fuel line at the compensation tube with clamps (6) in such a way that no wear is possible.

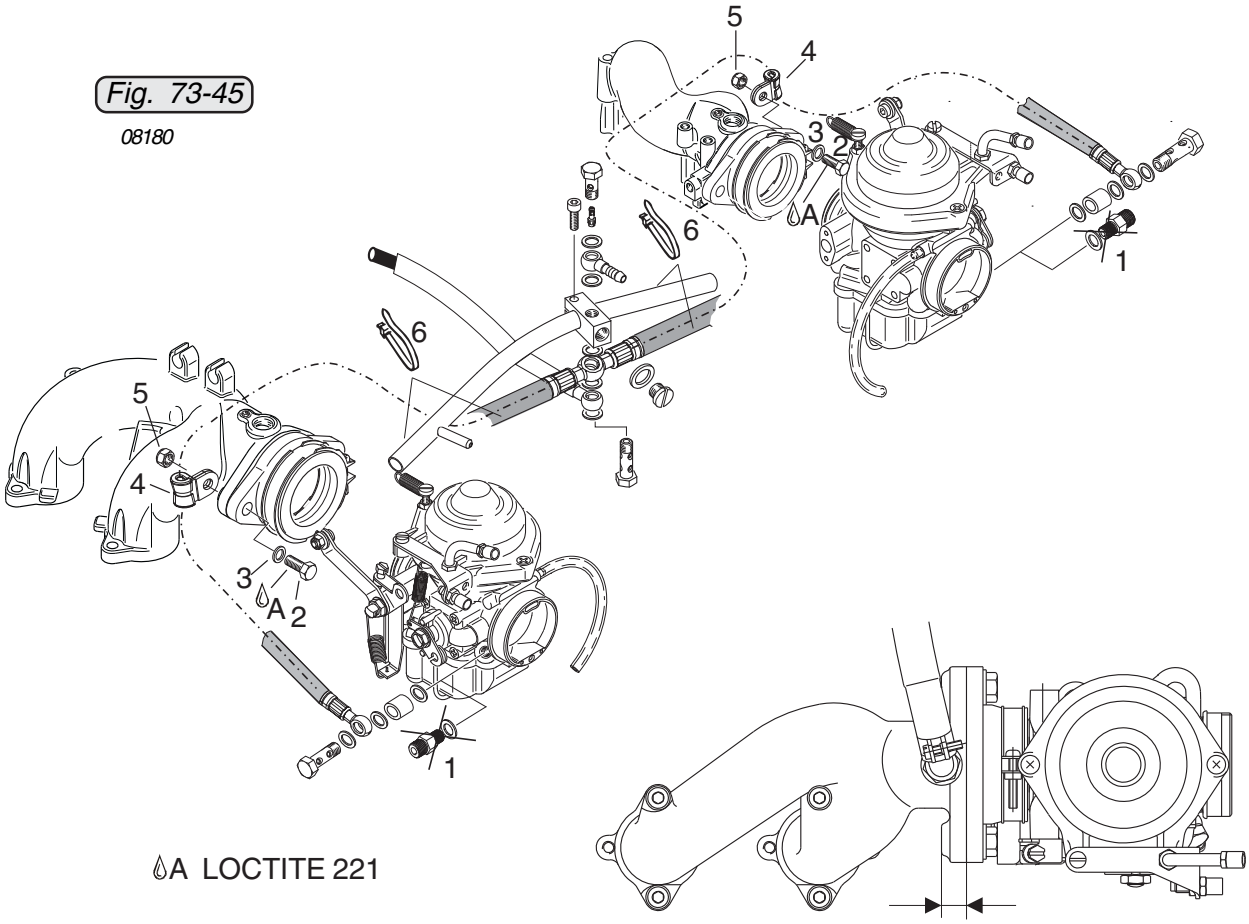

Fig. 73-45

08180

Fig. 73-46

07313

d05738

3.5.4) Assembly of the fuel lines (on 914 Series)

See Fig. 73-47.

Attach fuel line (1) to carburetor (fuel inlet) with collar nut (2). Support the line on the carburetor bracket with a cable clamp (3). The cable clamps are attached with allen screws (4) M5x12 and lock nuts (5). The tighten collar nut to 10 Nm (90 in.lb).

Now the airbox (6) can be refitted on the connections of the carburetors. Do not damage the previously fitted fuel lines and pressure connecting lines.

Ensure that all clamping locations are **free of grease**.

■ CAUTION: Use the complete slip-on length on the connection pieces.

Ensure that the airbox (6) is fitted horizontally and torsion-free. There must be no additional load on the carburetor fixations.

Now the screw hose clamps (7) can be tightened on the connecting hose (8) and, if necessary, on air intake hose (9).

Fit the pressure connecting lines (10) (float chamber venting) on both carburetors and fuel pressure regulator (11) with clamps (12) 8. See 73-00-00 sec. 3.4.9.

Attach the 2 fuel lines (1) to the fuel pressure regulator (11) with banjo bolts (13) M10 and sealing rings (14) 10x14 on both sides.

Tightening torque: 15 Nm (133 in.lb).

■ CAUTION: When fitting fuel lines, support them adequately to avoid strain or additional load.

Reconnect plug connection to temperature sensors and throttle potentiometer.

Check plug connections for security.

d05738

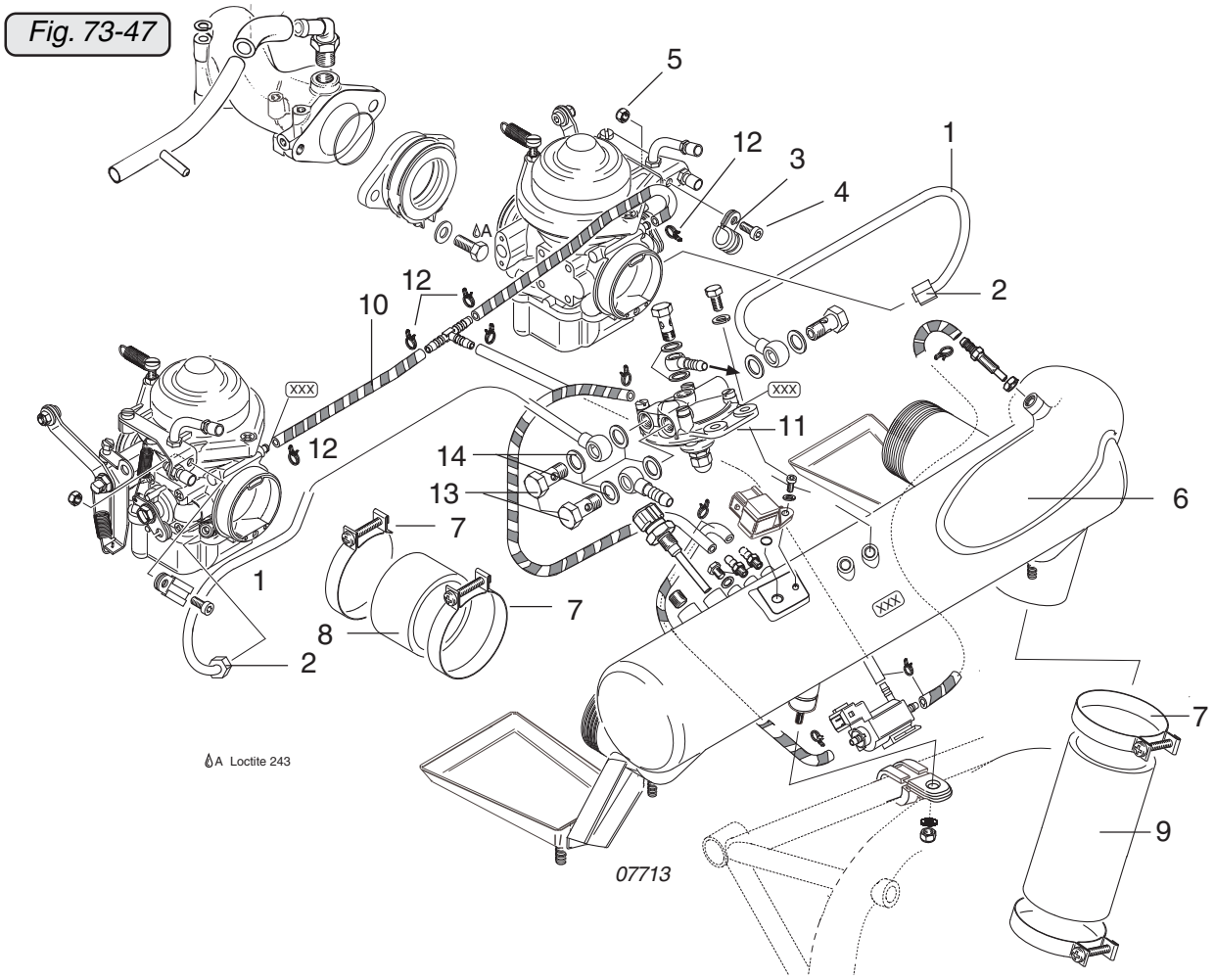
Fig. 73-47
5
12
3
4
1
2
12
10
XXX
XXX
11
12
14
13
6
7
1
7
8
2
7
9
A Loctite 243
07713

d05738

3.6) Intake manifolds fitting

See 72-00-00 sec. 3.17.

3.7) Engaging the carburetor support

See Figs. 73-48 and 73-49.

Check that the tension spring (1) moves freely in the allen screw (2) and in the distance sleeve (5) and engage the tension spring in the engagement latch (3) using a suitable tool. Ensure that the two arms (4) of the tension clamp with the engagement latch point upwards. If necessary, correct the position of the tension clamp.

■ CAUTION: To ensure efficient carburetor suspension, a distance of 40 mm (1.57 in.) between the allen screw (2) and the engagement latch (3) must be respected.

If a counter sunk screw is fitted instead of the allen screw and the distance sleeve, support set part no. 887730, see Fig. 73-54, must be used.

Repeat procedure for second carburetor.

◆ NOTE: Only on 912 Series: On engine models from the year 96 onwards, the carburetor support is already fitted in serial production. We recommend installing it on all engines older than this. See Service Bulletin SB-912-010,"Fitting of a carburetor support", latest issue.

Engines 912 S, 912 ULS, 914 UL and 914 F have been equipped with the carburetor support since the beginning of production.

Fig. 73-48

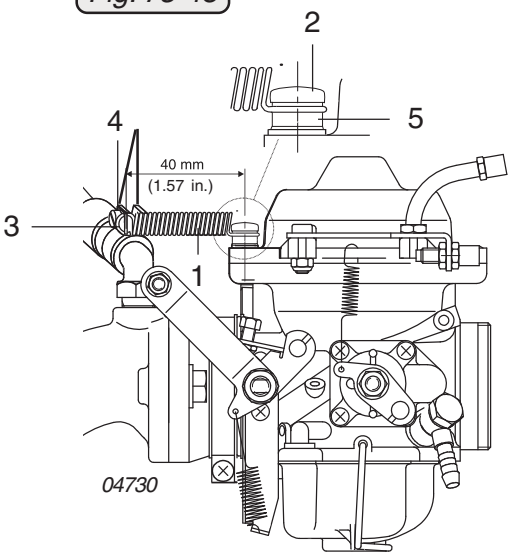

Fig. 73-49

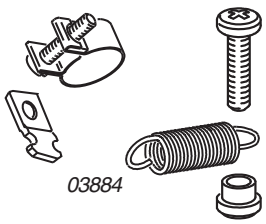

d04352

3.8) Connecting fuel lines (tank)

The fuel lines from the tank to the fuel pump, from the fuel pump to the two carburetors and the return line to the fuel tank must be installed as per the aircraft manufacturer's instructions when installing the engine in the aircraft.

■ CAUTION: When tightening the fuel lines, no force or torque may be applied to the fuel pump connections or the fuel pressure regulator.

d04352

NOTES

d05738

SECTION 74

IGNITION SYSTEM

1) Table of contents

SECTION 74
IGNITION SYSTEM

1) Table of contents ..... 74-00-00 / 1
2) Systems description ..... 74-00-00 / 3
2.1.) Electric system (alternators, ignition) ..... 74-00-00 / 3
2.1.1) Ignition ..... 74-00-00 / 6
2.1.2) Allocation of trigger coils and ignition circuits ..... 74-00-00 / 8
2.1.3) Firing order ..... 74-00-00 / 9
2.1.4) Ignition cables ..... 74-00-00 / 9
2.2) Connections for instrumentation ..... 74-00-00 / 9
2.2.1) Electronic rev counter ..... 74-00-00 / 9
3) Maintenance / troubleshooting ..... 74-00-00 / 11
3.1) Treatment of corrosion and surface damage ..... 74-00-00 / 11
3.1.1) Electric system ..... 74-00-00 / 11
3.2) Checking the ignition unit, trouble shooting ..... 74-00-00 / 11
3.3) Spark plugs ..... 74-00-00 / 12
3.4) Spark plug connectors and ignition cables ..... 74-00-00 / 12
3.5) Electronic module, trigger coil kit ..... 74-00-00 / 14
3.6) Charging coil ..... 74-00-00 / 15
3.7) Generator coils ..... 74-00-00 / 16
3.8) Dual ignition coil ..... 74-00-00 / 17
3.9) Cut-in speed of ignition ..... 74-00-00 / 18
3.10) Ignition timing control ..... 74-00-00 / 19
3.11) Ignition circuits inspection (ignition check) ..... 74-00-00 / 21
3.12) Measurement values for the ignition unit ..... 74-00-00 / 22
3.13) Wiring diagrams ..... 74-00-00 / 24
3.13.1) Engine internal (on the 912 Series) ..... 74-00-00 / 24
3.13.2) Engine internal (on the 914 Series) ..... 74-00-00 / 30
3.13.3) Engine external (on the 914 Series) ..... 74-00-00 / 34
3.14) Ignition electric set removal ..... 74-00-00 / 35
3.15) Ignition electric set dismantling ..... 74-00-00 / 37
3.15.1) Dual ignition coils replacement ..... 74-00-00 / 37
3.16) Ignition electric set reassembly ..... 74-00-00 / 41

d04778

3.17) Ignition electric set refitting ..... 74-00-00 / 43
3.18) Trigger coil kit replacement ..... 74-00-00 / 46
3.19) Stator removal and refitting ..... 74-00-00 / 48
3.20) Fly wheel hub' ..... 74-00-00 / 49
3.21) Interference suppression box (only on the 912 Series) ..... 74-00-00 / 52
3.21.1) Interference suppression box dismantling ..... 74-00-00 / 52
3.21.2) Interference suppression box wiring diagram ..... 74-00-00 / 53
3.21.3) Interference suppression box assembly ..... 74-00-00 / 54
3.21.4) Interference suppression box fitting ..... 74-00-00 / 54
3.22) Rev counter and ignition trigger coils ..... 74-00-00 / 55
3.23) External alternator (optional on 912/914 Series) ..... 74-00-00 / 57
3.23.1) V-belt pulley removal ..... 74-00-00 / 57
3.23.2) Alternator removal ..... 74-00-00 / 57
3.23.3) V-belt assembly ..... 74-00-00 / 57
3.23.4) Checking of the external generator ..... 74-00-00 / 59
3.23.4.1) Check of the power output of the generator ..... 74-00-00 / 59
3.23.4.2) Mechanical check ..... 74-00-00 / 59
3.23.5) Alternator assembly ..... 74-00-00 / 59
3.23.6) V-belt tension ..... 74-00-00 / 59
4) Wear limits ..... 74-00-00 / 61
5) Form Sheets ..... 74-00-00 / 63

d04353

2) Systems description

2.1.) Electric system (alternators, ignition)

See Fig. 74-1.

ROTAX engines of the 912/914 Series are equipped with a breakerless dual ignition system (DCDI-Dual Capacitor Discharge Ignition).

The ignition unit needs no external power supply.

Each of the two independent charging coils (1) located on the generator stator supplies one of the two ignition circuits. The energy is stored in capacitors of the electronic modules (2). At the moment of ignition, 2 each of the 4 external trigger coils (3) actuate the discharge of the capacitors via the primary circuit of the dual ignition transformers (4).

◆ NOTE: The 5th trigger coil (5) is provided for the rev counter signal.

Fig. 74-1

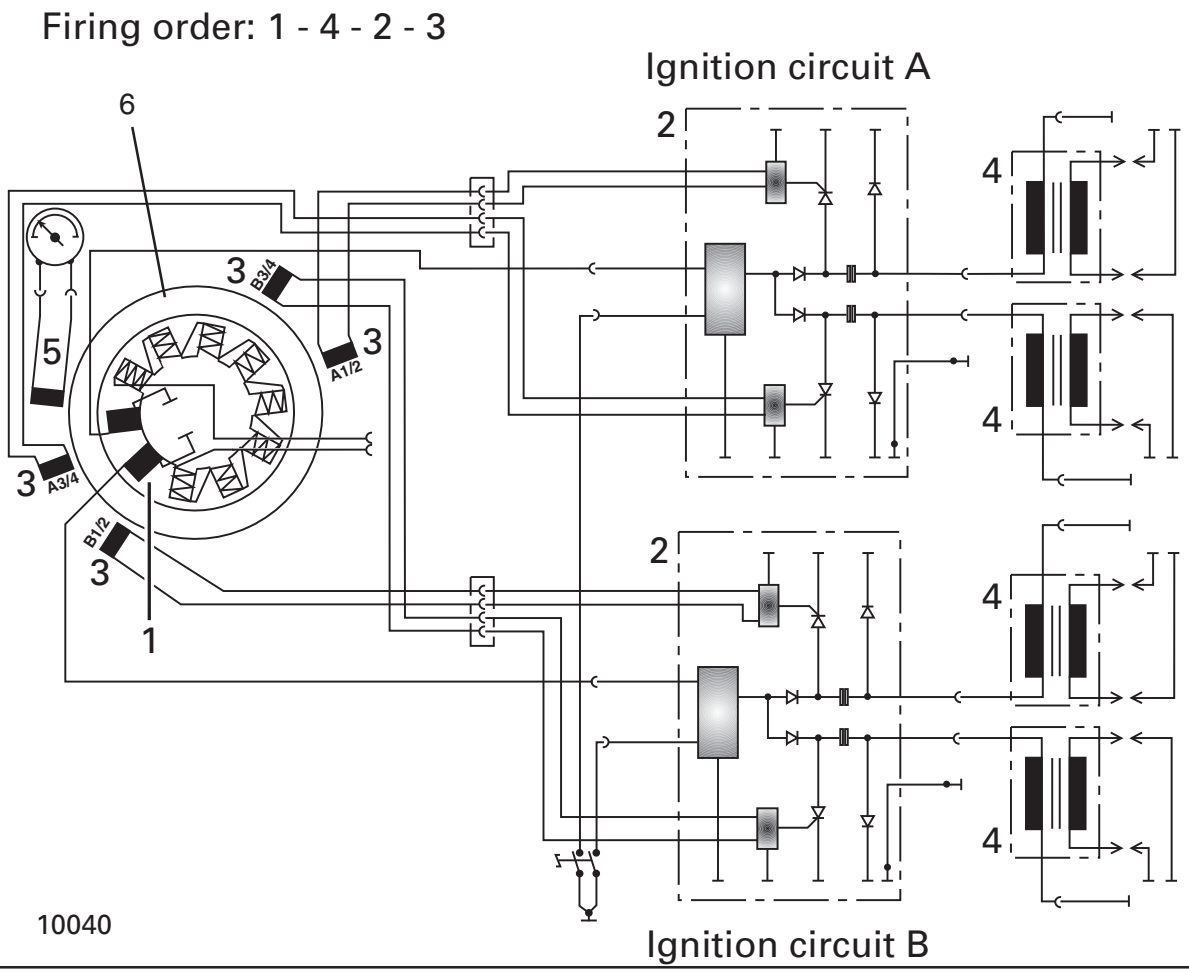

d05739

The standard equipment also includes an integrated AC generator (6) with an external rectifier-regulator (12V DC 250 W).

For higher power requirements, it is possible to install an external alternator (12V DC 600W).

◆ NOTE: A rectifier-regulator is already integrated in the external alternator.

The electric system comprises the **internal generator** with the charging coils for the ignition and the **ignition electrics** with the electronic boxes and the 4 double ignition coils.

- **Internal generator:** See Fig. 74-2.

  Consisting of **stator** with 8 generator coils (1) and the 2 independent ignition charging coils (2) and the tenpole magneto ring (3)

  The fly wheel hub (4) (ignition triggering) is attached to the magneto ring.

  The 4 trigger coils (5) are fitted externally on the alternator.

- **Ignition electrics:** See Fig. 74-3.

  Consists of 4 dual ignition coils (1) connected together by their magnetic cores and two electronic modules (2) positioned above.

  The 3-point suspension is with one each support on crankcase, ignition housing and intake manifold.

  For safety reasons, the ignition electrics must not be exposed to ambient temperatures higher than 80 °C (176 °F).

d02624

Fig. 74-2

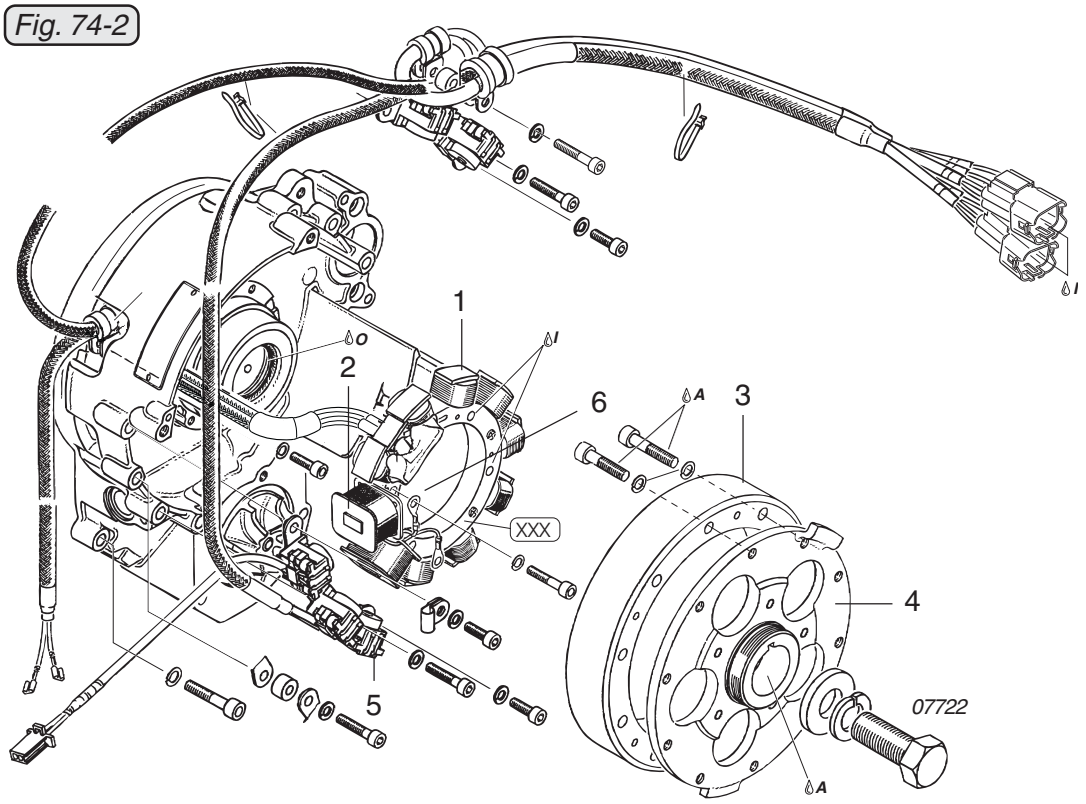

Fig. 74-3

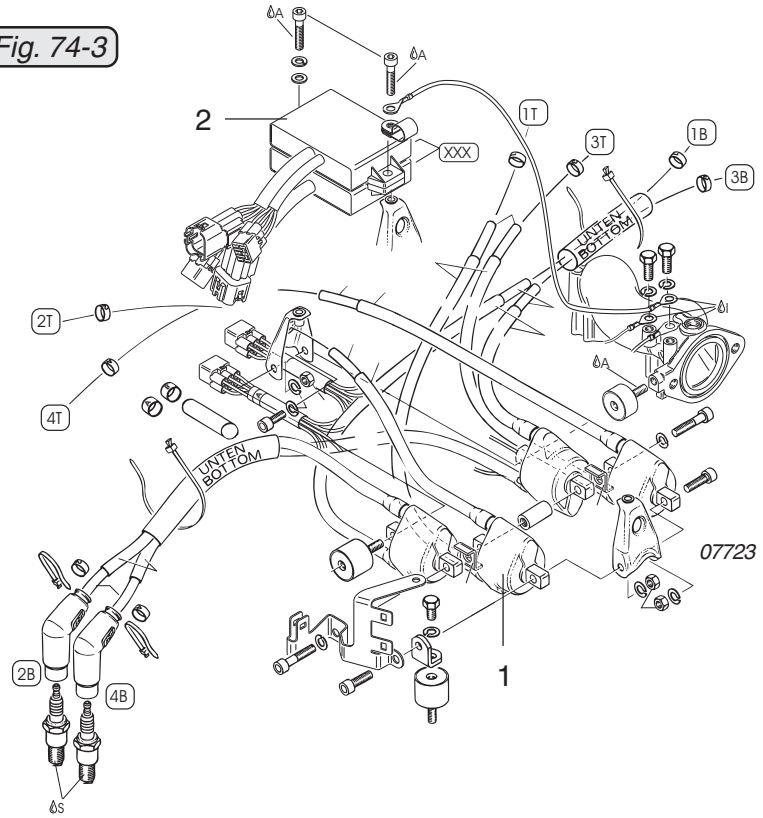

d02624

2.1.1) Ignition

See Fig. 74-4.

As already stated, the engine is equipped with dual ignition of a breakerless capacitor discharge design (DCDI). That means that the ignition unit comprises two independently working ignition circuits (separate trigger coil, electronic module, charging coils etc.).

◆ NOTE: The ignition unit cannot be disassembled and needs no adjustment.

Each ignition circuit consists of two ignition branches. Ignition occurs on cylinder 1 and 2 simultaneously every 360° as well as on cylinder 3 and 4 but 180° offset.

◆ NOTE: Due to engine design, ignition occurs also at "the TDC of the exhaust stroke", but this has no effect on engine operation.

The engine is furnished with an automatic ignition timing controlled by the edge of trigger cams on the fly wheel hub and the electronic modules.

◆ NOTE: For easy engine start, the ignition timing at start is 4° B.T.D.C. for ignition circuit A and B.

As soon as the engine runs, the ignition point will change over automatically to operation ignition.

On the 912 Series:

Differences between electronic module part no. 966726 and part no. 966727:		without advanced start	electronic module with advanced start
	fly wheel hub		
ignition point at start	966871 966872	4° Before T.D.C. 3° After T.D.C.	4° Before T.D.C. 3° After T.D.C.
time delay for ignition at start:		none	3 - 8 sec.
switching to advanced ignition:		from 650 to 1000 RPM depending on trigger gap	after the expiration of the time delay (3-8 sec.)
ignition timing in normal operation:		Circle A: 26° before T.D.C. Circle B: 26° before T.D.C. [1) 2)] Circle B: 22° before T.D.C. [3)]	Circle A: 26° before T.D.C. Circle B: 26° before T.D.C. [1) 2)] Circle B: 22° before T.D.C. [3)]

On the 914 Series: ignition circuit A 26°

ignition circuit B 22°

The transition from start ignition timing to the timing for operation takes place between 650 and 1000 rpm.

See Installation Manual, chapter 24-00-00 and SI-912-020 of the relevant engine type.

d05739

◆ NOTE: The different ignition points (only on 914 Series) for the top spark plugs and the bottom spark plugs takes into account the differing ignition delays, preventing pre-ignition and detonation.

The difference in the ignition points is achieved by different lengths of the trigger cam (1) on the fly wheel hub.

Trigger cam for ignition circuit A (raised position) is approx. 4 mm (0.16") longer.

Fig. 74-4

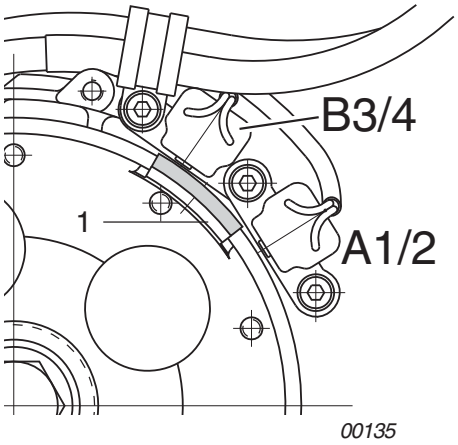

d02624

2.1.2) Allocation of trigger coils and ignition circuits

See Fig. 74-5.

The upper trigger coils **A1/2** and **A3/4** (raised approx. 5 mm (0.20 in.)) control the top electronic module.

i.e.

Ignition circuit A: top trigger coil - top electronic module
Ignition circuit B:bottom trigger coil - bottom electronic module

◆ NOTE: The spark plugs are supplied differently on the 912 Series and the 914 Series. See 74-00-00 sec. 3.10.

Fig. 74-5

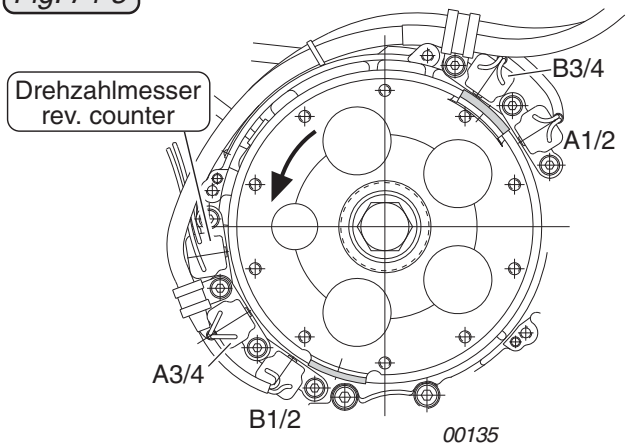

d02624

2.1.3) Firing order

The firing order is **1** - **4** - **2** - **3**.

2.1.4) Ignition cables

The 8 ignition cables of the spark plug connectors are marked with number 1 through 4 for cylinder assignment. 2 cables each for the bottom spark plugs are routed together in a protection hose between the cylinder heads.

◆ NOTE: The bottom ignition cables can only be routed into position without spark plug connector.

The ignition cables are screwed into the dual ignition coil and the spark plug connector, thus enabling easy replacement.

2.2) Connections for instrumentation

■ CAUTION: Consult also the relevant section in the Installation Manual.

2.2.1) Electronic rev counter

On the ignition housing there is an inductive pick-up triggering one each positive or negative impulse at every turn of the crankshaft. The optional rev counter is a specially adapted AC device.

NOTES

d02624

3) Maintenance / troubleshooting

The following sections describe maintenance procedure for engines of the 912/914 Series above and beyond the maintenance and special checks, see corresponding Maintenance Manual (Line Maintenance) for the respective engine type, 912 Series or 914 Series, and the systems descriptions given hitherto. The description is subdivided into subsections and descriptions of the function of the various systems.

3.1) Treatment of corrosion and surface damage

See 71-00-00 sec. 4.

3.1.1 Electric system

Formation of a rust film on the permanent magnets in the magneto ring and on the metal cores of the trigger coils is harmless.

Replace attachment screws and lock washers if there is heavy oxidation or rust formation.

Before reassembly clean all contact surfaces of the screws removed and apply LITHIUM grease. Take care that no foreign objects fall into the magneto ring. Clean ring terminals and apply LITHIUM grease to the contact surfaces to assure lasting contact.

Check contact between electrical contacts and ground connections (ring terminals) by removal, if necessary apply contact spray to increase conductivity.

3.2) Checking the ignition unit, trouble shooting

Components can only be replaced but not repaired. If there is no ignition spark, systematically trace possible causes.

▲ WARNING: For safety's sake, switch off ignition, if possible, and withdraw ignition key!

▲ WARNING: Danger of fatal injury due to high voltage! Always take all appropriate protective measures and use all safety equipment when working on the ignition unit!

d02624

3.3) Spark plugs

See Figs. 74-6 and 74-7.

- Inspection of the spark plugs:
  - check electrode gap, dimension **(SP01**), see 74-00-00 sec. 4.
  - check heat range, see 71-00-00 sec. 3.4.

See the latest Maintenance Manual "Line Maintenance“ for the respective engine type.

Fig. 74-6

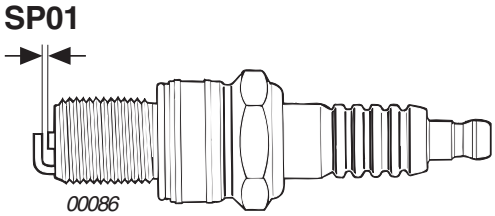

3.4) Spark plug connectors and ignition cables

See Fig. 74-7.

- Carry out visual inspection of spark plug connectors (1) for corrosion and damage, replace if necessary.

  Check tight fit of spark plug connectors on the spark plugs as shown in the maintenance overview. Assure security of the spark plug connector. Spark plug connectors which are seated too loosely must be replaced.
- Check minimum pull-off force of **30 N (265 in.lb)**.
- Check screw connection with the ignition cable (2) and the tie wrap clip (3). If there is visible damage, replace spark plug connector.
- Check correct connection of the ignition cables (2) against the wiring diagram. See 74-00-00 sec. 3.13.

  The cable ends are equipped with identification rings (4). The ignition cables for the bottom spark plugs are protected by a glass fiber/silicone protection hose (5) All ignition cables are covered by a protection hose (6) — replace if there is visible damage.

  For measurement values of the spark plug connectors, see 74-00-00 sec. 3.13

d05739

- Check all cables and their plug connections for damage and correct connection as per wiring diagram. See 74-00-00 sec. 3.13.
- Check all plug- and screwed connections for oxidation and tight fit.
- Check shorting cables and ignition switch. If ignition switch failure is suspected, the shorting cable can be pulled off the ignition switch.

▲ WARNING: Proceed with particular care, because the ignition is not switched off.

- Assure sufficient grounding between engine, battery and fuselage. Observe the fuselage manufacturer's wiring diagram.

Fig. 74-7

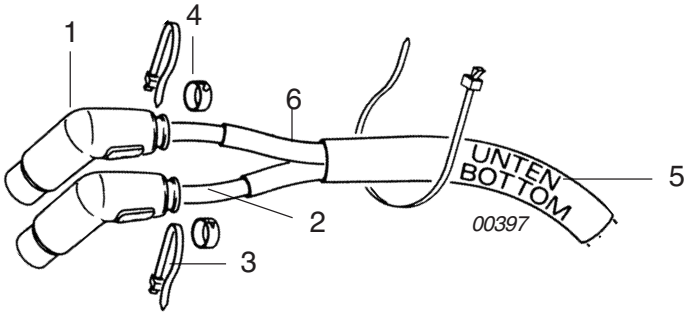

d02624

3.5) Electronic module, trigger coil kit

See Figs. 74-8, 74-9, 74-10 and 74-11.

■ CAUTION: On the 914 Series, the ignition points for circuit A and B differ from that on ROTAX engine 912 ! In the event of failure of an ignition circuit on the 914 Series, the two 6-pin plug connectors (1) of the pick-up cables may be swapped over for localization of the fault, **only for the purpose of testing** and at low throttle, **never at full throttle**.

◆ NOTE: The ignition unit of the 912 Series and 914 Series have been standardized. See SI-912-013 and SI-914-016,“Standardization of the ignition unit“, latest issue.

The modules (2) are interchangeable as they are of the same design.

If the affected electronic module is replaced without success, there is a fault in the charging coil or the trigger coils for this ignition circuit. Dismantling is described here for both cases. See 74-00-00 sec. 3.19.

If the malfunction in the ignition circuit then appears again when the modules have been interchanged, there is a fault in the electronic module.

Older engine models

Fig. 74-8

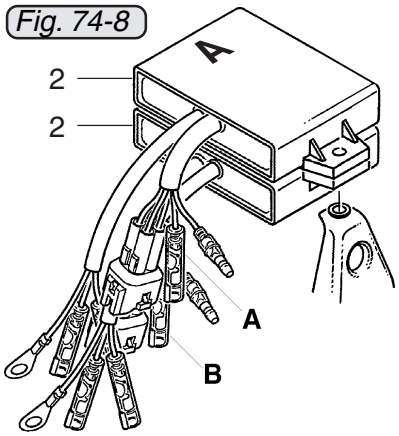

00399

Fig. 74-10

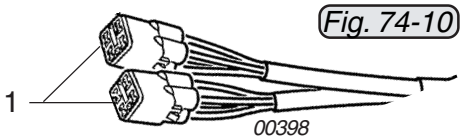

00398

New engine models

Fig. 74-9

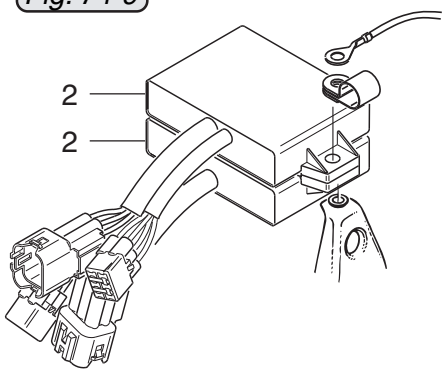

07724

Fig. 74-11

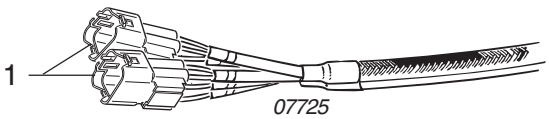

07725

d02624

3.6) Charging coil

See Fig. 74-12.

In case of malfunction of one ignition circuit, the 2 single-pin plugs of the red charging cables may be interchanged for localization of the problem.

If the failure remains on the same ignition circuit, the electronic module is the cause and the respective module must be replaced see 74-00-00 sec. 3.5.

If the failure passes on with the ignition circuit, the charging coil (1) for ignition circuit "**A**" or (2) for circuit "**B**" is the cause. In this case the stator must be removed see 74-00-00 sec. 3.19

Check charging cable for damage. Measure resistance with a multimeter see 74-00-00 sec. 5, if necessary, replace the complete stator. See 74-00-00 sec. 3.12.

Fig. 74-12

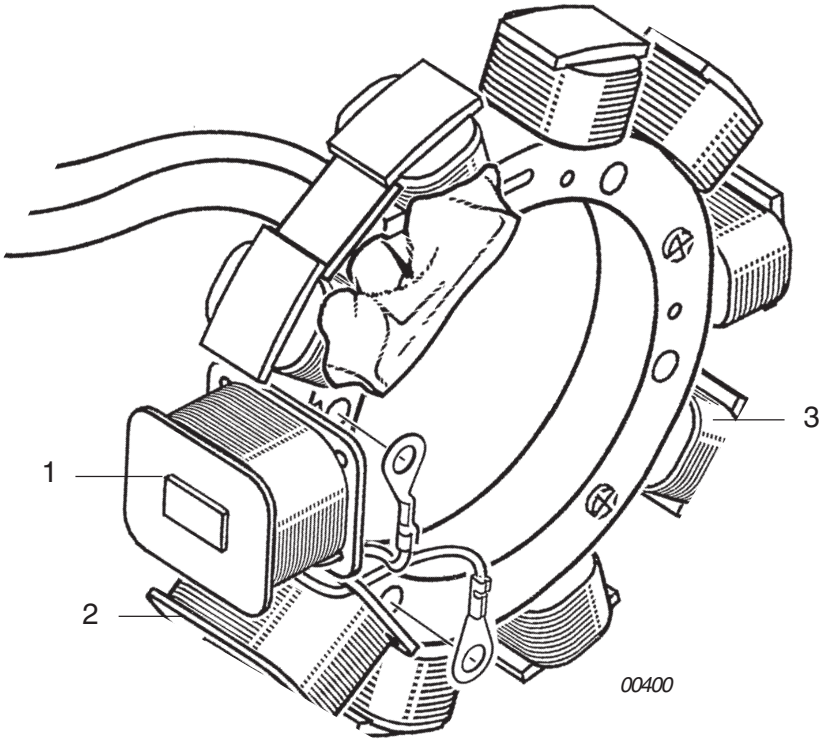

d02624

3.7) Generator coils

See Fig. 74-12.

If the generator does not work, the reason may be a defective or damaged yellow alternator cable or a defective winding on the 8 alternator coils (3). Disconnect alternator cables (yellow) and check resistance values.

Measure the resistance with a multimeter. See 74-00-00 sec. 3.12 and 74-00-00 sec. 5.

◆ NOTE: If the value measured corresponds with the values specified, the cause may be a defective rectifier-regulator.

■ CAUTION : When performing any of the work described here, ensure that no foreign objects can enter the ignition unit.

Checking the integrated alternator in operation:

The check of the internal alternator is carried out at idle speed and under load on a 150 W (0.201 hp) consumer.

– Establish check circuit as shown on wiring diagram Fig. 74-12.
– Set engine speed to 4000 rpm.
– Check that charge indicating lamp goes out.
– Read off the idle voltage on the voltmeter (8) and record it in the 74-00-00 sec. 5 „Form sheets“.
– Close circuit-breaker (7), read off voltage under load on the voltmeter (8) and record it in the 74-00-00 sec. 5 „Form sheets“ .

Fig. 74-12

07539

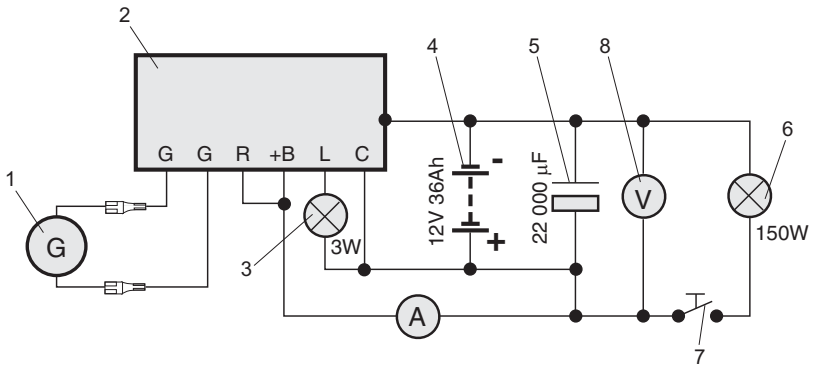

(1)	Magneto-generator	(5)	Capacitor 22 000 µF/25 V
(2)	Recitfier regulator part no. 965345	(6)	Consumer (lamps) 150 W (0.201 hp)
(3)	Charge indicating lamp 3W (0.004 hp)	(7)	Circuit breaker
(4)	Battery 12 V charged	(8)	Voltmeter

Testing is carried out at 4000 rpm with and without consumer.

d04353

3.8) Dual ignition coil

See Figs. 74-13 and 74-14.

If the failure of a single resistance spark plug or 2 resistance spark plugs is noticed, check the connections and the resistance values of the respective dual ignition coil, see 74-00-00 sec. 3.12

The iron core (1) must not be loose. If required, replace the dual ignition coil. In this case, the following dismantling work must be performed, see 74-00-00 sec. 3.15 and 3.16. See SI-912-013 and SI-914-016,“Standardization of the ignition unit“, latest issue.

Measure the resistance with a multimeter.
See 74-00-00 sec. 3.12 and 74-00-00 sec. 5.

Older engine models

Fig. 74-13

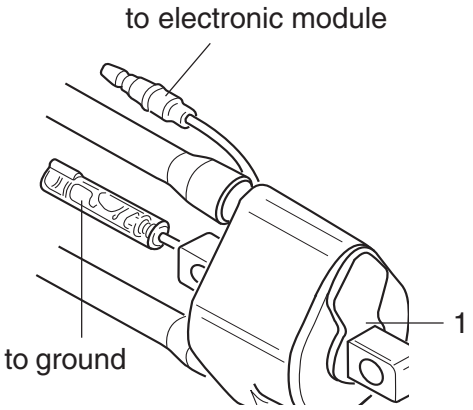

00401

New engine models

Fig. 74-14

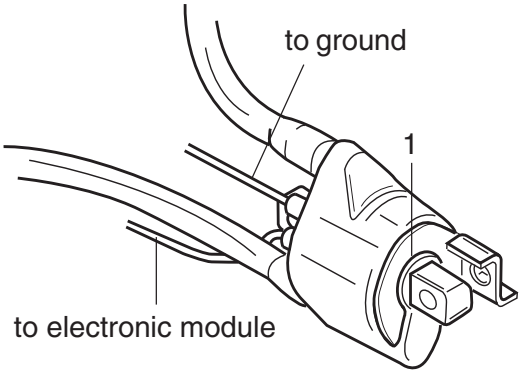

07726

d04778

3.9) Cut-in speed of ignition

See Fig. 74-15

Ignition must cut-in between 150 rpm. and max. 220 rpm. of crankshaft speed. To be checked with stroboscope and inductive pliers (see 00-00-00 sec. 10.5).

For this procedure, connect stroboscope (1) to battery (2) and clamp inductive pliers (3) to the ignition cable of cylinder 1 (top) or cylinder 2 (top). These two spark plugs are actuated by the trigger coil A1/2.

Start engine, aim stroboscope towards trigger coil A1/2 and observe flashing light.

This procedure should be performed on all ignition cables.

◆ NOTE: A precise inspection is only possible on an ignition test bed.

Fig. 74-15

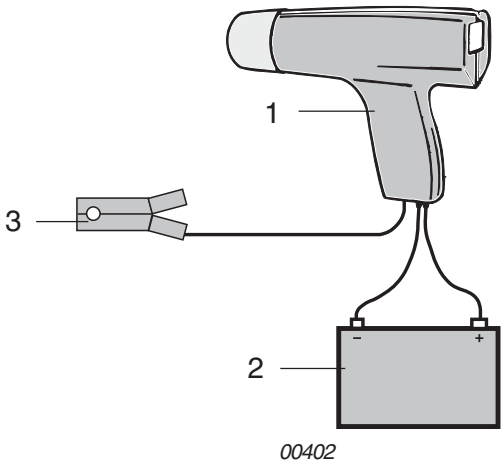

d02624

3.10) Ignition timing control

See Figs. 74-16 and 74-17.

The automatic ignition timing is actuated by the trigger cam (1) of ignition circuit **A** or trigger cam (2) of ignition circuit **B**. Transition from start ignition timing to operating ignition timing takes place from 650 rpm upwards.

Inspection is carried out with a stroboscope and induction pliers.

For this procedure, connect stroboscope to battery and clamp inductive pliers to the ignition cable of cylinder **"1 top"**. This spark plug is actuated by the trigger coil **A1/2**.

At an engine speed of 150 to max. 1000 rpm,. the trailing edge of the trigger cam (3) aligns with the core (4) of the trigger coil.

Trigger coil assignation (on the 912 Series)

Trigger coil A1/2 serves the top spark plug of cylinder 1 and 2

Trigger coil A3/4 serves the bottom spark plug of cylinder 3 and 4.

Trigger coil B1/2 serves the bottom spark plug of cylinder 1 and 2

Trigger coil B3/4 serves the top spark plug of cylinder 3 and 4.

Trigger coil assignation (on the 914 Series)

Trigger coil A1/2 serves the top spark plug of cylinder 1 and 2

Trigger coil A3/4 serves the top spark plug of cylinder 3 and 4

Trigger coil B1/2 serves the bottom spark plug of cylinder 1 and 2

Trigger coil B3/4 serves the bottom spark plug of cylinder 3 and 4.

After transition from start ignition timing to operating ignition timing, the leading edge of the trigger cam (5) aligns with the core (4) of the trigger coil. See Fig. 74-17.

For wear limits, see 74-00-00 sec. 4.

The readings must be entered in 72-00-00 sec. 5.

The ignition timing control must be carried out on all 4 trigger coils, paying attention to the corresponding ignition cable.

See 72-00-00 sec. 5.

d02624

Start ignition timing

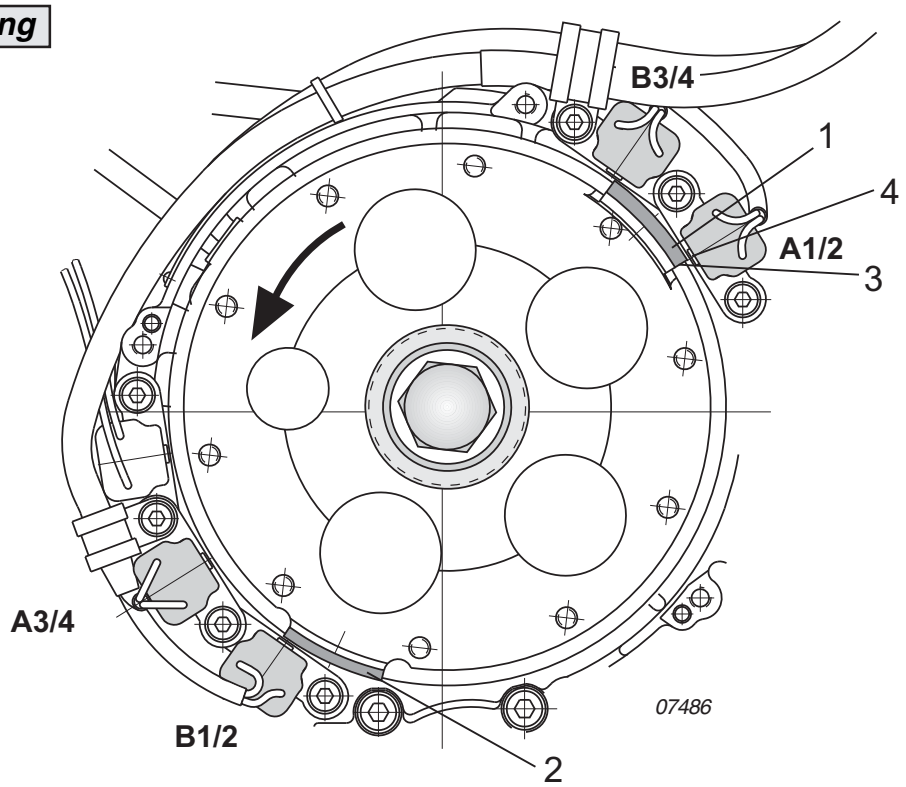

Fig. 74-16

Operating ignition timing

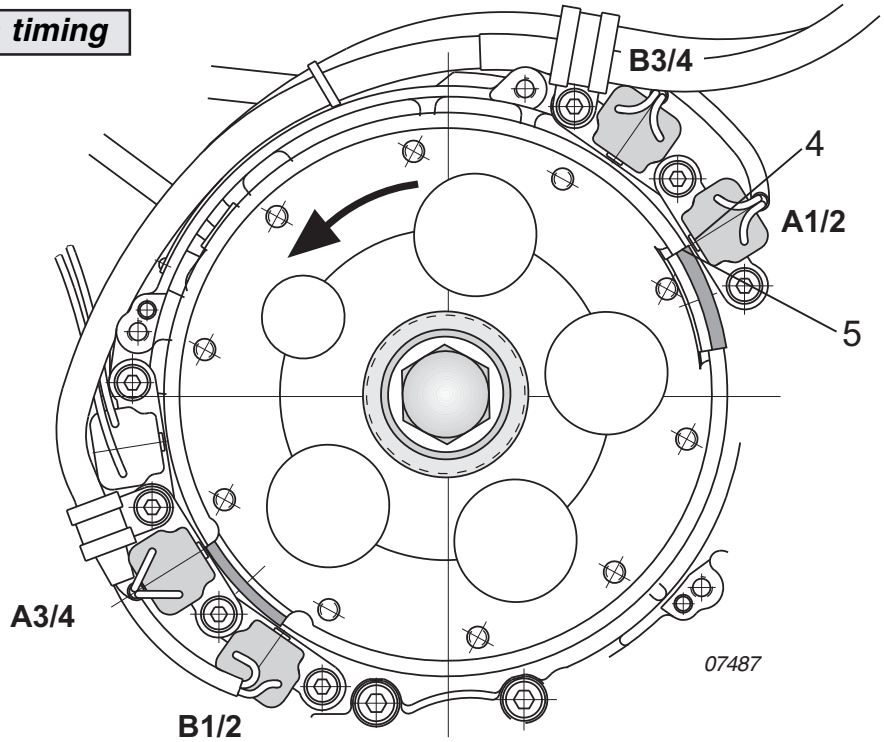

Fig. 74-17

d02624

3.11) Ignition circuits inspection (ignition check)

Let engine warm up. The ignition check is performed at an engine speed of approx. 4000 rpm (approx. 1700 propeller speed).

Switch off ignition circuit "**A**" with ignition switch. This causes only 1 spark plug per cylinder to fire. The speed drop with only one spark plug per cylinder must not exceed 300 rpm. Then perform the same inspection with ignition circuit "**B**" switched off. Here, too, the speed drop must not exceed 300 rpm. The difference in speed using only circuit A or B must not exceed 115 rpm.

d02624

3.12) Measurement values for the ignition unit

The following measurement values can be checked at the appropriate point after detaching the plug connections.

Generator coil (on stator)	yellow	-	yellow	0.1	to	0.8 Ω
Generator coil	yellow	-	ground		∞	
Charging coil (on stator)	red	-	ground	3.2	to	4.5 Ω
Trigger coil	green/white	-	blue/yellow	115.0	to	123.0 Ω
Trigger coil new * (with clamps)	white/yellow	-	blue/yellow	220.0	to	250.0 Ω
Primary ignition coil connection contact		-	ground	0.1	to	0.4 Ω
Secondary ignition coil high voltage		-	High v.	6.1	to	6.7 kΩ
Spark plug connector				4.4	to	6.0 kΩ

◆ NOTE: * Fitted in serial production from year 1995.

◆ NOTE: A check of the complete ignition unit is only possible on an ignition test bench with an oscilloscope. This is especially important if failure occurs only intermittently. In this case, send the complete ignition unit to an authorized overhaul facility.

d05739

NOTES

d02624

3.13) Wiring diagrams

3.13.1) Engine internal (on the 912 Series)

Wiring diagram of the ignition unit ("individual plug"), 912 Series

See Figs. 74-18, 74-19 and 74-20.

Legend to wiring diagram (Fig. 74-18)

1 ignition magneto generator
2 trigger coil for ignition circuit ”A”
3 trigger coil for ignition circuit ”B”
4 trigger coil for rev counter
5 plug receptacle 2-pin
6 electronic rev counter
7 grounding switch for ignition circuit ”A” and ”B”
8 plug receptacle 1-pin
9 plug receptacle 4-pin
10 electronic module for ignition circuit ”A”
11 electronic module for ignition circuit ”B”
12 double ignition coil
13 engine
14 cylinder 1-4
15 spark plugs
16 charging coils
V consumer connection
o color code

d02624

T = top	*= oben*
B = bottom	*= unten*

Fig. 74-18

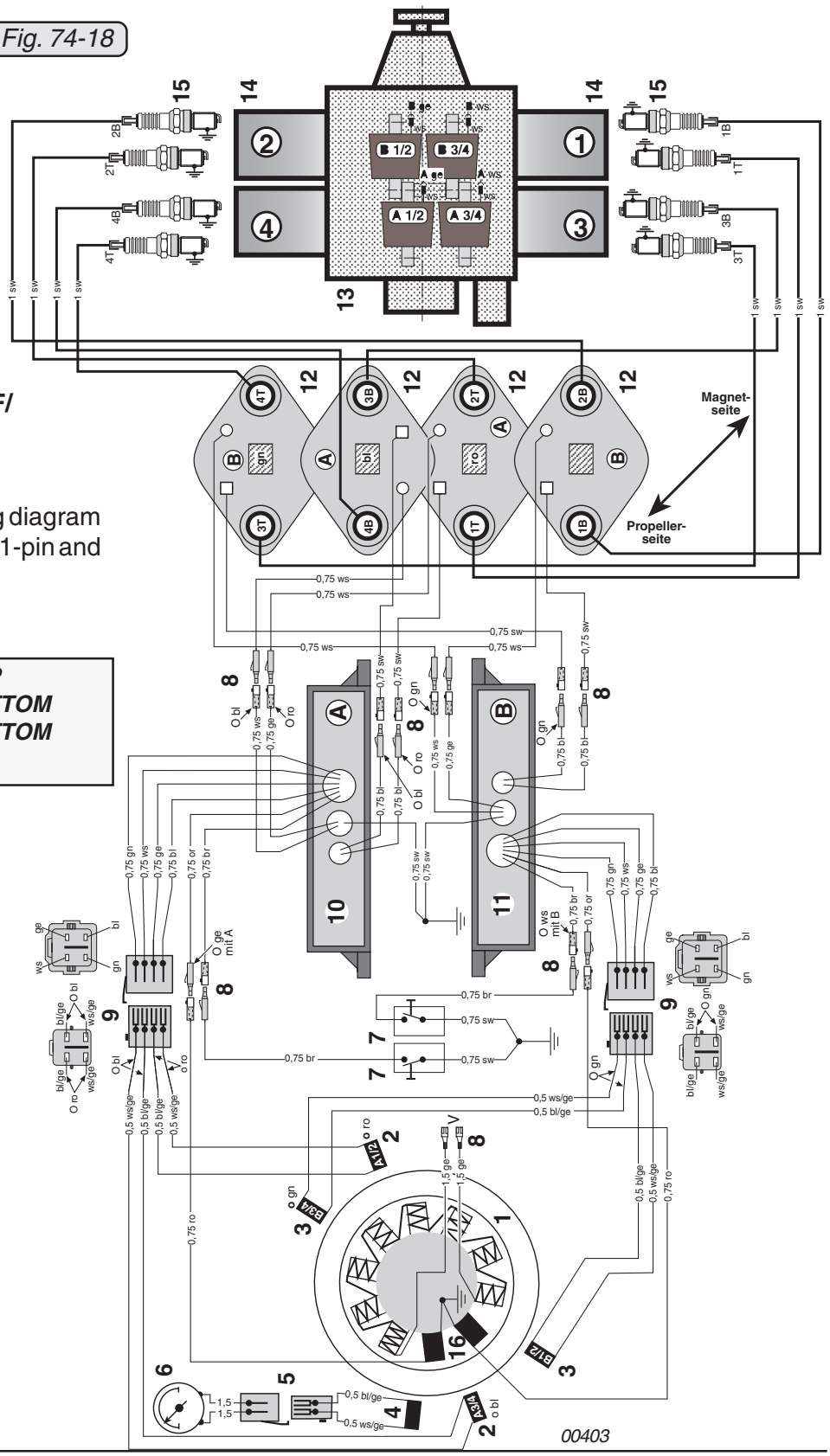

Engine version 912 A/F/ UL older model

◆NOTE:

Fig. 74-18 shows the wiring diagram for electronic modules with 1-pin and 4-pin plugs.

ignition circuit A:	***1 - 2 TOP***
	3 - 4 BOTTOM
ignition circuit B:	***1 - 2 BOTTOM***
	3 - 4 TOP

bl	*blue*
br	*brown*
ge	*yellow*
gn	*green*
ro	*red*
rs	*pink*
sw	*black*
ws	*white*
or	*orange*

Legend to wiring diagram (Fig. 74-19)

1	ignition magneto generator
2	trigger coil for ignition circuit ”A”
3	trigger coil for ignition circuit ”B”
4	trigger coil for rev counter
5	plug receptacle 2-pin
6	electronic rev counter
7	grounding switch for ignition circuit ”A” and ”B”
8	plug receptacle 1-pin
9	plug receptacle 4-pin
10	electronic module for ignition circuit ”A”
11	electronic module for ignition circuit ”B”
12	double ignition coil
13	engine
14	cylinder 1 - 4
15	spark plugs
16	charging coils
V	consumer connection
o	color code

d02624

T = top = oben
B = bottom = unten

Fig. 74-19

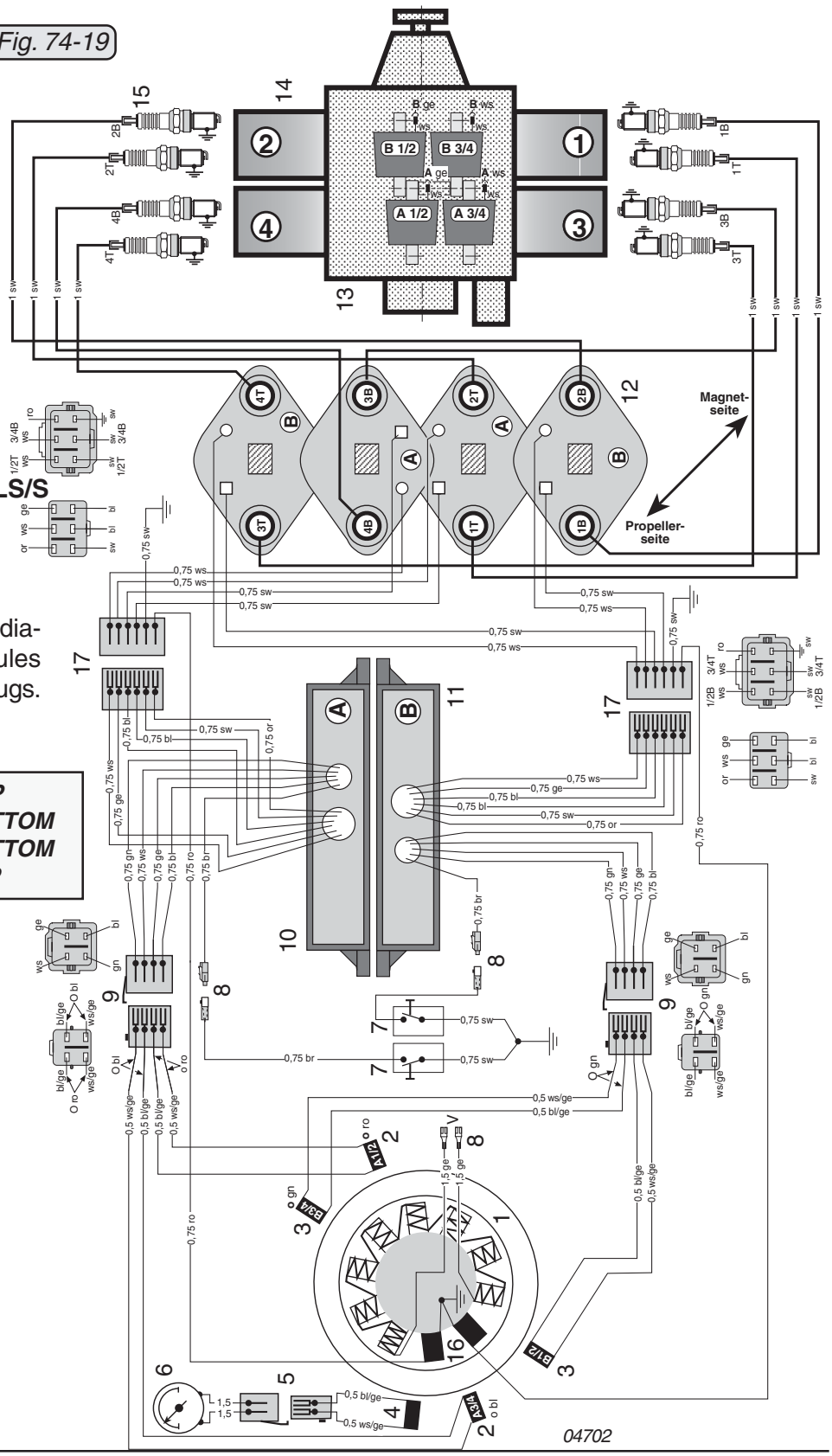

Engine version 912 ULS/S older model

◆NOTE:

Fig. 74-19 shows the wiring diagram for electronic modules with 1-pin, 4-pin and 6-pin plugs.

ignition circuit A: 1 - 2 TOP
3 - 4 BOTTOM
ignition circuit B: 1 - 2 BOTTOM
3 - 4 TOP

bl	*blue*
br	*brown*
ge	*yellow*
gn	*green*
ro	*red*
rs	*pink*
sw	*black*
ws	*white*
or	*orange*

d04778

Legend to wiring diagram (Fig. 74-20)

1	ignition magneto generator
2	trigger coil for ignition circuit ”A”
3	trigger coil for ignition circuit ”B”
4	trigger coil for rev counter
5	plug receptacle 2-pin
6	electronic rev counter
7	grounding switch for ignition circuit ”A” and ”B”
8	plug receptacle 1-pin
9	plug receptacle 4-pin
10	electronic module for ignition circuit ”A”
11	electronic module for ignition circuit ”B”
12	double ignition coil
13	engine
14	cylinder 1 - 4
15	spark plugs
16	charging coils
V	consumer connection
o	color code

d02624

T = top = oben
B = bottom = unten

Fig. 74-20

Engine version 912 A / F / U L / U L S / S new model

◆ NOTE:

Fig. 74-20 shows the wiring diagram for electronic modules with 6-pin and 6-pin plugs. See also SI-912-020.

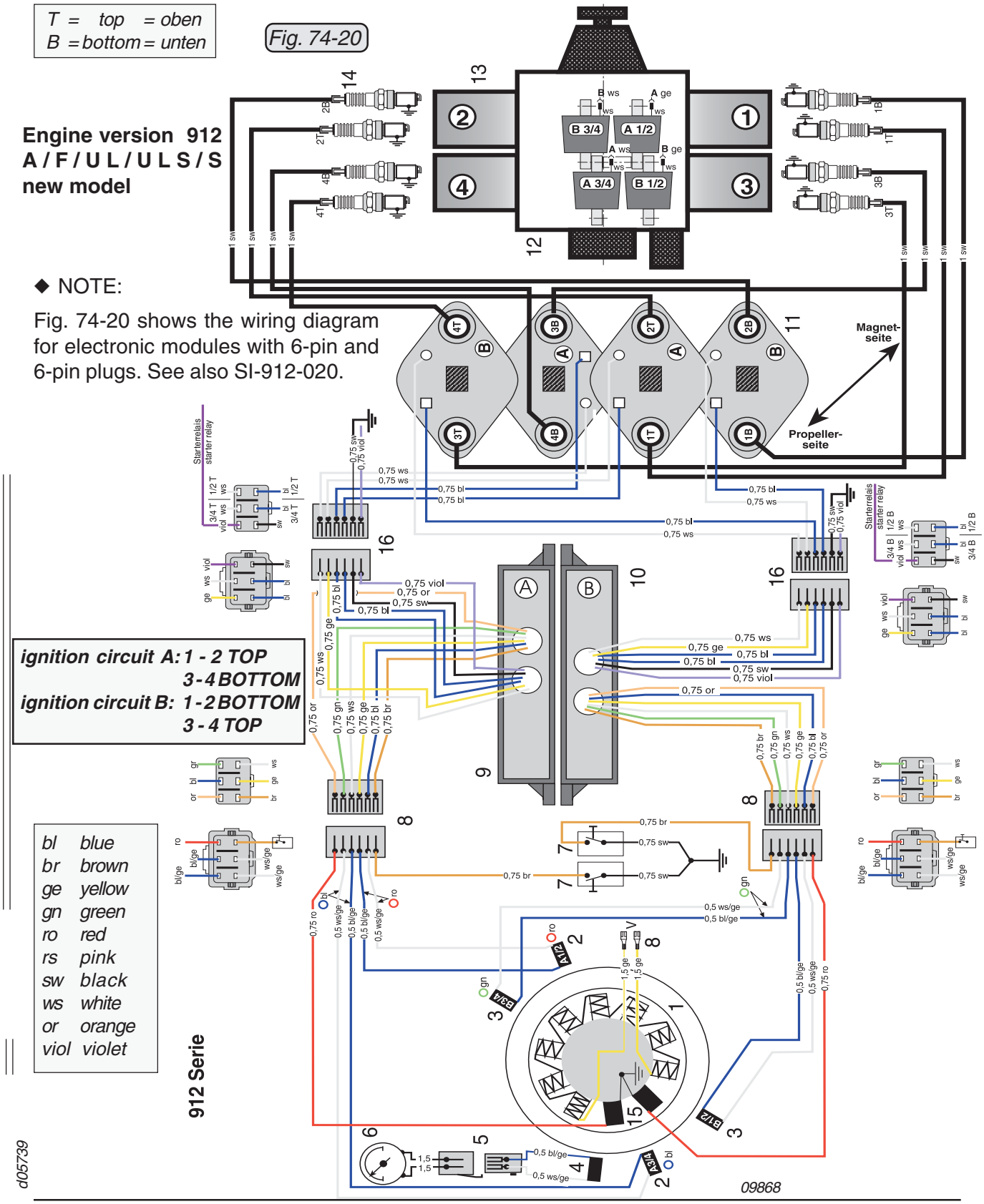

3.13.2 Engine internal (on the 914 Series)

See Figs. 74-21 and 74-22.

Legend to wiring diagram (Fig. 74-21)

1	ignition magneto generator
2	trigger coil for ignition circuit ”A”
3	trigger coil for ignition circuit ”B”
4	trigger coil for rev counter
5	plug receptacle 2-pin
6	electronic rev counter
7	grounding switch for ignition circuit ”A” and ”B”
8	plug receptacle 1-pin
9	plug receptacle 4-pin
10	electronic module for ignition circuit ”A”
11	electronic module for ignition circuit ”B”
12	double ignition coil
13	engine
14	cylinder 1 - 4
15	spark plugs
16	charging coils
V	consumer connection
o	color code

d02624

T = top	*= oben*
B = bottom	*= unten*

Fig. 74-21

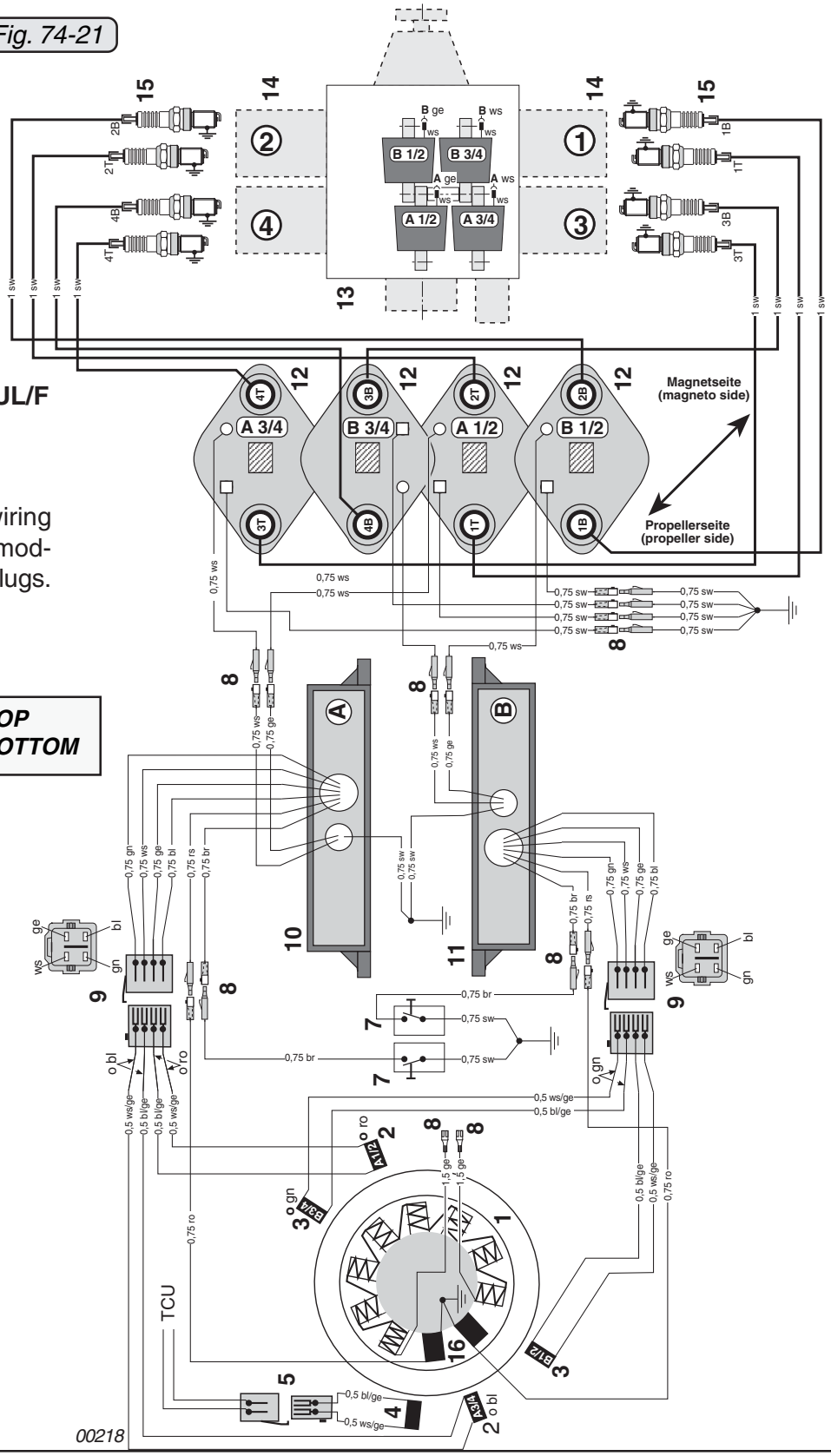

Engine version 914 UL/F older model

◆NOTE:

Fig. 74-21 shows the wiring diagram for electronic modules with 1-pin and 4-pin plugs.

ignition circuit A: 1 - 4 TOP
ignition circuit B: 1 - 4 BOTTOM

bl	*blue*
br	*brown*
ge	*yellow*
gn	*green*
ro	*red*
rs	*pink*
sw	*black*
ws	*white*

d04778

Legend to wiring diagram (Fig. 74-22)

1	ignition magneto generator
2	trigger coil for ignition circuit ”A”
3	trigger coil for ignition circuit ”B”
4	trigger coil for rev counter
5	plug receptacle 2-pin
6	electronic rev counter
7	grounding switch for ignition circuit ”A” and ”B”
8	plug receptacle 1-pin
9	plug receptacle 4-pin
10	electronic module for ignition circuit ”A”
11	electronic module for ignition circuit ”B”
12	double ignition coil
13	engine
14	cylinder 1 - 4
15	spark plugs
16	charging coils
V	consumer connection
o	color code

d02624

T = top	*= oben*
B = bottom	*= unten*

Fig. 74-22

Engine version 914
UL/F new model

◆ NOTE:

Fig. 74-22 shows the wiring diagram for electronic modules with 6-pin and 6-pin plugs. See also SI-912-020.

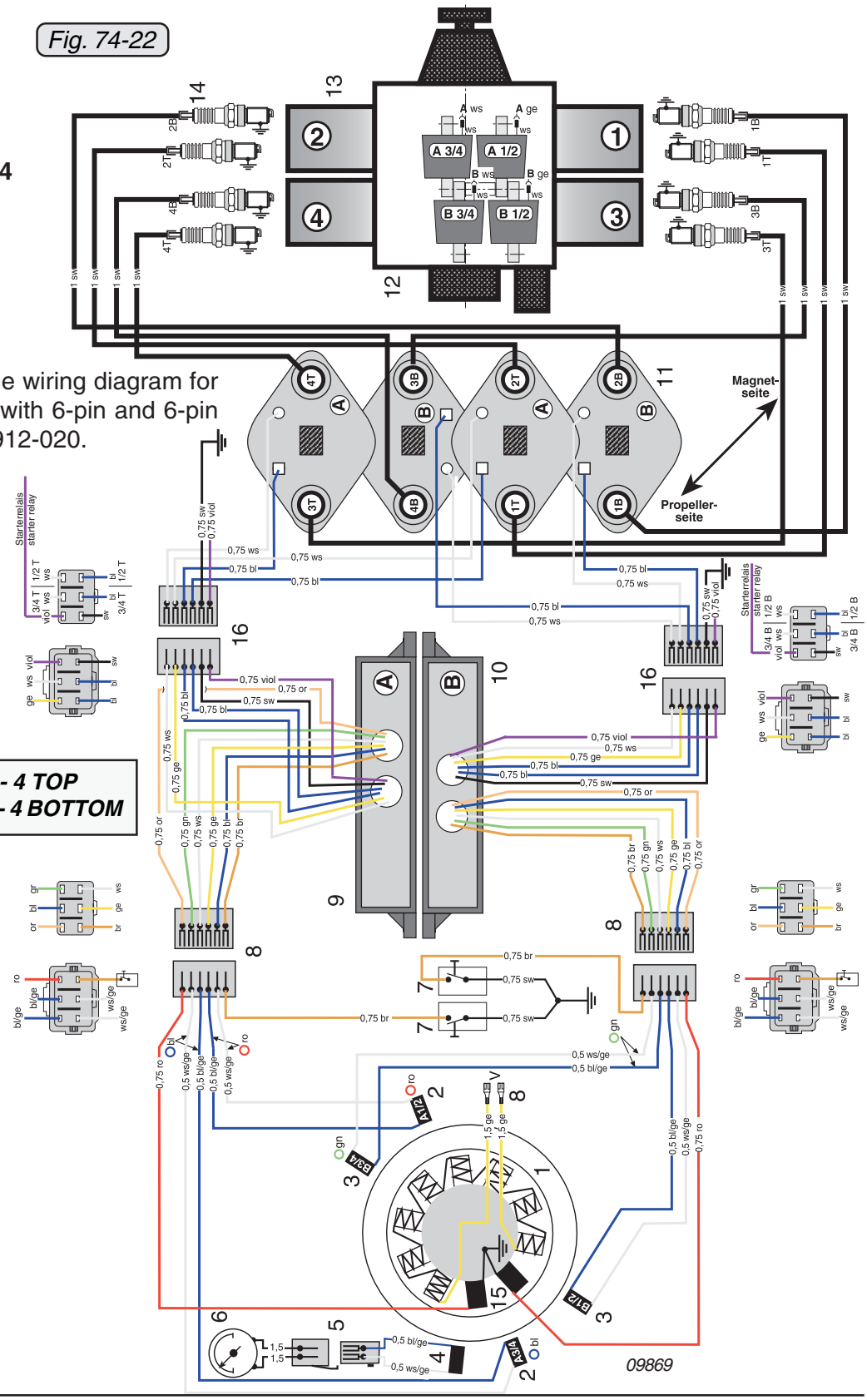

ignition circuit A: 1 - 4 TOP
ignition circuit B: 1 - 4 BOTTOM

bl	*blue*
br	*brown*
ge	*yellow*
gn	*green*
ro	*red*
rs	*pink*
sw	*black*
ws	*white*
viol	*violet*

d05739

3.13.3 Engine external (on the 914 Series)

See latest Installation Manual for engines of the 914 Series and 76-00-00 sec. 3.1.2.3.

d02624

3.14) Ignition electric set removal

See Fig. 74-23

The ignition electric set, consisting of 2 electronic modules and 4 dual ignition coils, is fitted to the engine on 3 rubber buffers. For removal, detach all 8 spark plug connectors (1) from the spark plugs. Cut the tie wraps for the 4 lower spark plug connectors, unscrew the resistance spark plug connectors and draw the ignition cables with protection hose through the cylinder heads. Take care not to lose the ignition cable identification rings.

◆ NOTE: On engines with hydraulic propeller governor, it is necessary to also remove the resistance spark plug connectors of the 2 upper spark plugs of cylinders 2 and 4 to allow easy removal of the ignition cables.

Cut all tie wraps (2) for ignition cable attachment and the plug connectors. Remove cable clamp (3) and grounding cable (10) after removal of allen screw M5x25 (4) at the electronic module. Mark the two plug connections (5) of the pickup cables and the plug connection of the red charging cable and remove them (see 74-00-00 sec. 3.13 respective wiring diagram for ignition unit). Detach both attachments (6) of the ignition electric set (1 x M6 on ignition housing and 1 x M8 on crankcase).

Remove 4 allen screws M6 (7) from each of the two intake manifolds (8). Now the 2 intake manifolds (8) with O-rings, resonator line (9) and ignition electric set can be removed, proceeding with great care. Plug all 4 intake apertures to avoid entry of foreign objects

d02624

Fig. 74-23

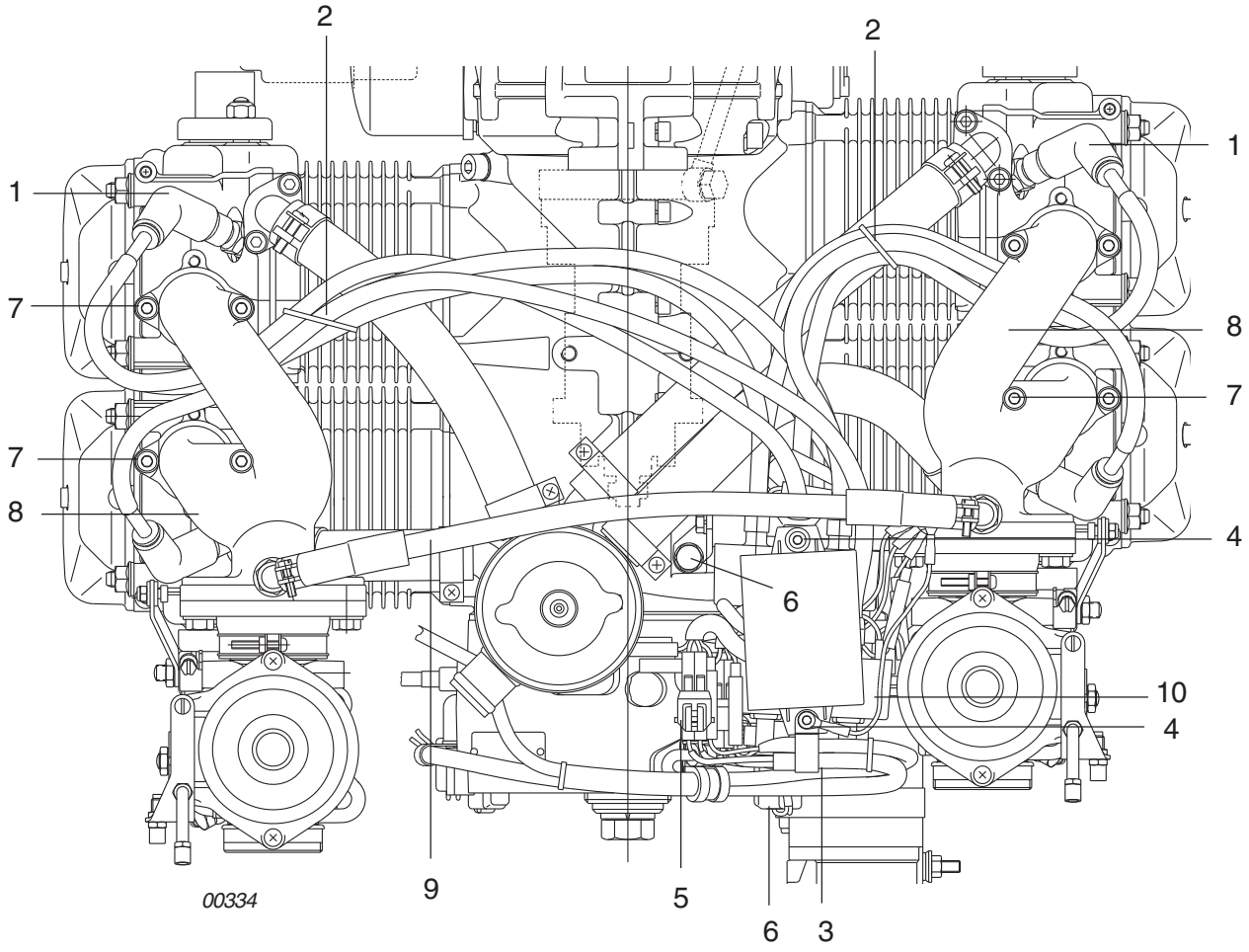

d02624

3.15) Ignition electric set dismantling

See Figs. 74-24 and 74-25.

◆ NOTE: Before removal, mark all 8 ignition cables resp. check the correct application of the identification rings (1)-(2)-(3)-(4) of cylinders no. 1 through 4 to avoid mix-up at reassembly.

Cut the remaining tie wraps (25) of the spark plug connectors and unscrew the spark plug connectors.

Remove allen screw M5x25 (6) for the electronic modules (7) and tilt modules sideways from the engine. Remove hex. screw M6x16 (8) and lock washer from the intake manifold and the grounding cables (9) of both electronic modules and (10) from the 4 ignition coils as well as the grounding cable of the sensor cable assembly (26). Pay attention to the correct connection between electronic modules and ignition coils.

3.15.1 Dual ignition coils replacement

On older engine versions (electronic module with 1+ 4 pin plug):

See Fig. 74-24.

For replacement of a dual ignition coil, the following dismantling procedure is required:

Remove hex. nut M6 (11) and rubber buffer (12) with bracket (13). Remove the allen screw M6x16 (14) from the rubber buffer (15) with an allen key. Remove both hexagon socket screws (16) and ignition coil holder (17) as well as the 3 rubber buffers (18) together with the bracket (19).

Remove both allen screws M6x30 (20) from the distance nut M6 (21). After detaching the double grounding cables (10), the dual ignition coils (22) can be replaced individually. The ignition cables are screwed in and therefore are replaceable.

◆ NOTE: With the exception of the dual ignition coil (23) for spark plug 3 and 4 bottom, all are fitted in the same position, with boss (24) upwards.

d02624

On newer engine versions (electronic module with 6+ 4 pin plug):

See Fig. 74-25.

When replacing a dual ignition coil, the following dismantling procedure is required:

Remove hex. nut M6 (11) and rubber buffer (12) with bracket (13). Using an allen key, remove the allen screw M6x16 (14) on the rubber buffer (15) and remove the ignition coil holder (28). Remove both allen screws (16) and ignition coil holder (17) as well as the rubber buffer (18) together with the bracket (19).

Remove both allen screws M6x30 (20) at the distance nut M6 (21) and remove the connector holder (42). After detaching the dual ignition coils (22) with the fixation latch (37), the dual ignition coils (22) can be replaced individually. To do so, release the corresponding cables (white/blue) from the connector housing using special pin release tool part no. 877500.

The ignition cables are screwed into the dual ignition coil and thus also replaceable.

◆ NOTE: With the exception of the dual ignition coil (23) for spark plug 3 and 4 bottom, all are fitted in the same position, with boss (24) upwards.

d02624

Fig. 74-24

For older engine models

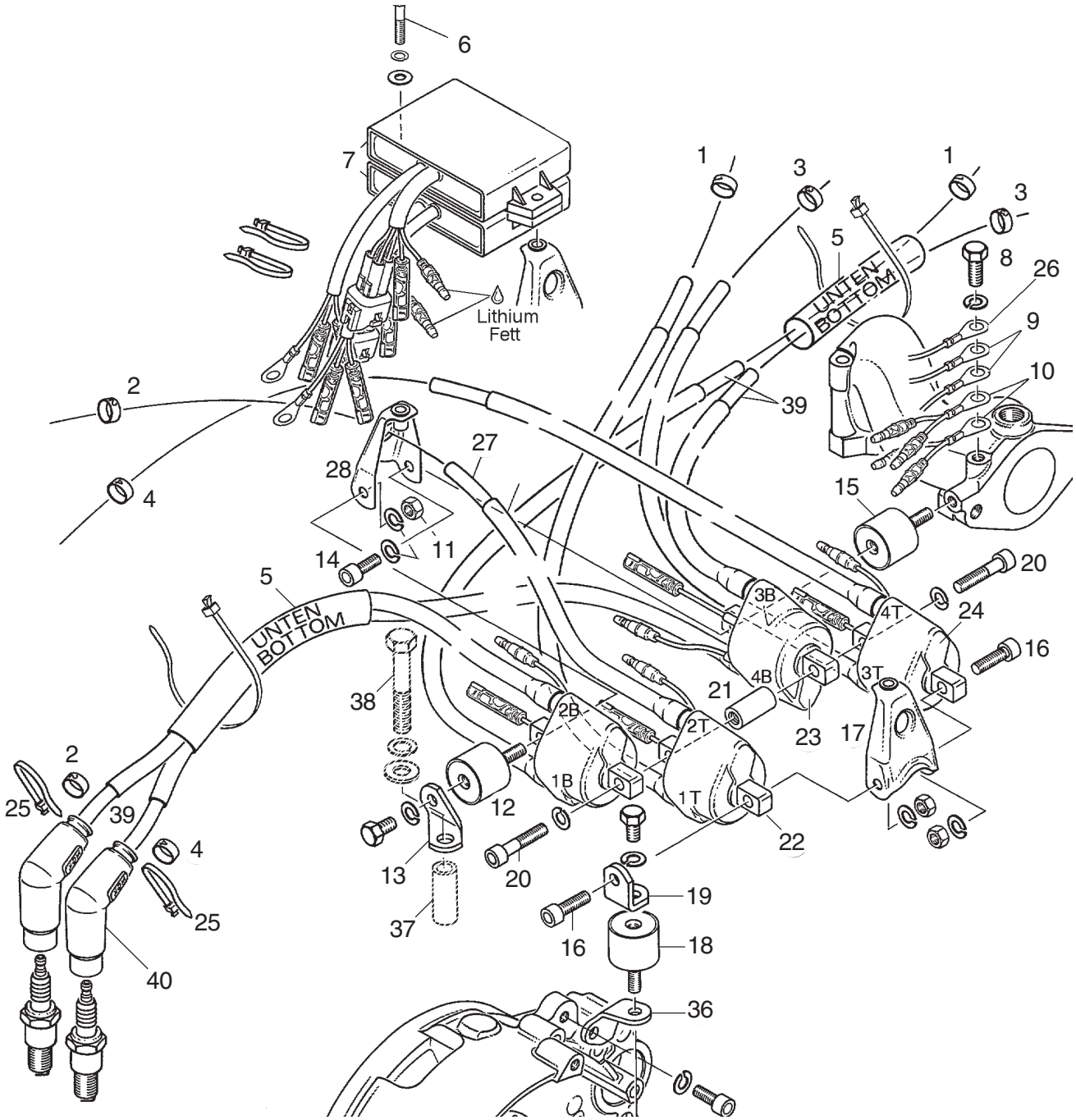

d02624

Fig. 74-25

For new engine models

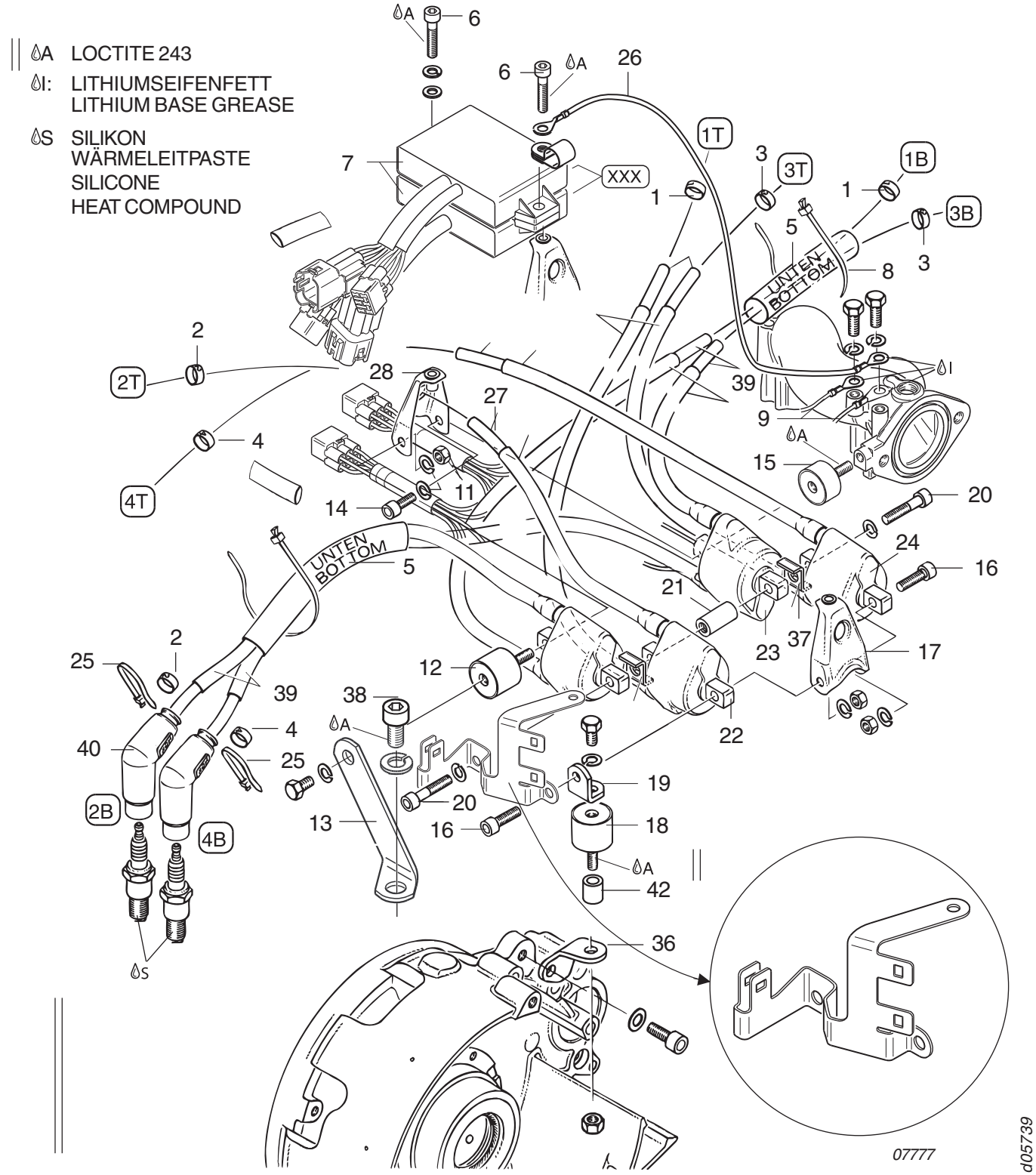

3.16) Ignition electric set reassembly

On older engine versions (electronic module with 1+ 4 pin plug):

See Figs. 74-18, 74-19, 74-21 and 74-24.

Re-assembly of dual ignition coils in reverse order.

Attach the dual ignition coils offset and in the correct position as per drawing, with the two allen screws M6x30 (20) and lock washers A6 with distance nut M6 (21). Pay attention to the dual ignition coil (23) for spark plugs 3B and 4B. It must be fitted turned by 180° compared with the 3 other dual ignition coils, see Fig. 74-24.

With the two allen screws M6x20 (16), lock washer A 6 and hex. nut M6 re-assemble, first only slightly tightening, the ignition coil holder (17), the ignition coil bracket (19), and the dual ignition coils.

Insert ignition cable (27) into the ignition coil holder (28) and fit the dual ignition coils on rubber buffer (15) with the allen screw (14) M6x16 and lock washer.

◆ NOTE: When replacing the rubber buffer (15), secure it on the intake manifold with LOCTITE 243.

The connections of the white cables and the black grounding cables of the dual ignition coils must be placed as per wiring diagram. Route the grounding cables (9) and (10) towards the outside. To achieve the correct distance, fit the two electronic modules (7) on the ignition coil holders with allen screws (6) M5x25.

Now all attachment screws for dual ignition coils can be tightened. Tighten ignition coil bracket (13) and rubber buffer (12) with hex. nut M6 and lock washer.

On newer engine versions (electronic module with 6+ 4 pin plug):

See Figs. 74-20, 74-22 and 74-25.

Re-assembly of dual ignition coils in reverse order.

Screw corresponding ignition cables with protection hose onto the dual ignition coils.

◆ NOTE: The correct cable lengths and assignations can be seen in the latest Illustrated Parts Catalog.

d05739

Attach the dual ignition coils offset and in the correct position with fixation latch (37) and connector holder (42) as per drawing, with the two allen screws M6x30 (20) and lock washers A6 with distance nut M6 (21). Pay attention to the dual ignition coil (23) for spark plugs 3B and 4B. It must be fitted turned by 180° compared with the 3 other dual ignition coils, see Fig. 74-25.

With the two allen screws M6x20 (16), lock washer A 6 and hex. nut M6, re-assemble, first only slightly tightening, the ignition coil holder (17), the ignition coil bracket (19), and the dual ignition coils.

Insert ignition cable (27) into the ignition coil holder (28) and fit the dual ignition coils on rubber buffer (15) with the allen screw (14) M6x16 and lock washer.

◆ NOTE: When replacing the rubber buffer (15), secure it on the intake manifold with LOCTITE 243.

The connectors of the white/blue primary cables from the dual ignition coils must be connected up as shown in the wiring diagram.

■ CAUTION : The different ignition distribution of engine types 912/914 is achieved by means of the different plug assignation on the 6-pin connector housing, see Fig. 74-20 and 74-22, item. (16).

Route the grounding cables (9) towards the outside. To achieve the correct distance, fit the two electronic modules (7) on the ignition coil holders with allen screws (6) M5x25.

Now all attachment screws for the dual ignition coils can be tightened. Tighten ignition coil bracket (13) and rubber buffer (12) with hex. nut M6 and lock washer.

Now engage the two 6-pin connector receptacles of the electronic modules in the connector holder (42) and fit the connector housing of the dual ignition coils.

■ CAUTION : Pay attention to the correct attachment position A/B and the position on the connector holder!

Plug connection A ---> magneto side position

Plug connection B ---> power take off side position

d05739

3.17) Ignition electric set refitting

On older engine versions (electronic module with 1+ 4 pin plug):

See Figs. 74-24 and 74-26.

Insert O-rings (33) 34x2 in the groove (34) of the cylinder heads and remove the plugs from the intake openings. Fit both intake manifolds (35) with pre-assembled ignition electric set and tighten crosswise with 4 allen screws M6x25/70 and lock washers. Insert rubber buffer (18) into bracket (36) of ignition housing and tighten with hex. nut and lock washer.

Place distance sleeve (37) in position and fix ignition electric set on crankcase with hex. screw (38) M8, washer and lock washer. Now tighten all screws and nuts of the ignition electric set.

Fit grounding cables (9), (10) and (26) on the nubs (41) at the intake manifold with hex. screw (8) M6x16 and lock washer. Attach both 4-pin plug connections (electronic module to trigger coil kit) and secure with tie wrap.

◆ NOTE: The pick-up cable of ignition circuit **A** (top module) is marked at the end of the isolating hose with the colors blue and red. Those of ignition circuit **B** (bottom module) are green and colorless (neutral) respectively.

■ CAUTION : The cable shielding must be fully inserted into the cable clamp to assure optimum grounding.

Connect the two red cables coming from the charging coils with the two pink cables of the SMD electronic modules. Route the whole cable assembly into the cable clamp and attach it to the ignition coil holder (17) together with the electronic module using allen screw (6) M5x25.

Fit two each ignition cables (39) for the lower spark plugs into the glass fiber/silicone tube (5) and route them between cylinder heads. Screw resistance spark plug connector (40) onto the ignition cables, secure with tie wraps (25) and fit onto the spark plugs as shown on the wiring diagram.

Attach 4 ignition cables each for cylinders 1 - 3 and 2 - 4 to the new coolant hose with a new tie wrap.

d02624

On newer engine versions (electronic module with 6+ 4 pin plug):

See Figs. 74-25 and 74-27.

Remove plugs from the intake openings and insert O-rings (33) 34x2 in the groove (34) of the cylinder heads. Fit both intake manifolds (35) with pre-assembled ignition electric set and tighten crosswise with 4 allen screws M6x25/70 and lock washers. Insert rubber buffer (18) into bracket (36) of ignition housing and tighten with hex. nut and lock washer.

Place retaining bracket (13) in position and fix ignition electric set on crankcase with allen screw (38) M8, washer and lock washer. Now tighten all screws and nuts of the ignition electric set.

Fit grounding cables (9) and (26) on the nubs (41) at the intake manifold with hex. screw (8) M6x16 and lock washer. Engage both 6-pin connector receptacles for the trigger coil kit in the connector holder (42) and insert the connector receptacles for the electronic modules.

◆ NOTE: The pick-up cable of ignition circuit A (top module) is marked at the end of the isolating hose with the colors blue and red. Those of ignition circuit B (bottom module) are marked green and colorless (neutral).

◆ NOTE: Ensure that they are plugged in in the correct position on the connector holder!

Plug connection A ---> „"top“

Plug connection B ---> "bottom“

Route the whole cable assembly into the cable clamp and attach it to the ignition coil holder (17) with LOCTITE 243 together with the electronic module using allen screw (6) M5x25.

■ CAUTION : The cable shielding must be fully inserted into the cable clamp to assure optimum grounding.

Fit two ignition cables (39) for each of the lower spark plugs into the glass fiber/silicone protection hose (5) and route them between the cylinder heads. Thread identification rings (1 - 4) onto the ignition cables as shown on the wiring diagram and screw resistance spark plug connectors (40) onto the ignition cables, secure with tie wraps (25) and fit onto the spark plugs as shown in the wiring diagram.

Attach 4 ignition cables each for cylinders 1 - 3 and 2 - 4 to the coolant hose with a new tie wrap.

d05739

Fig. 74-26

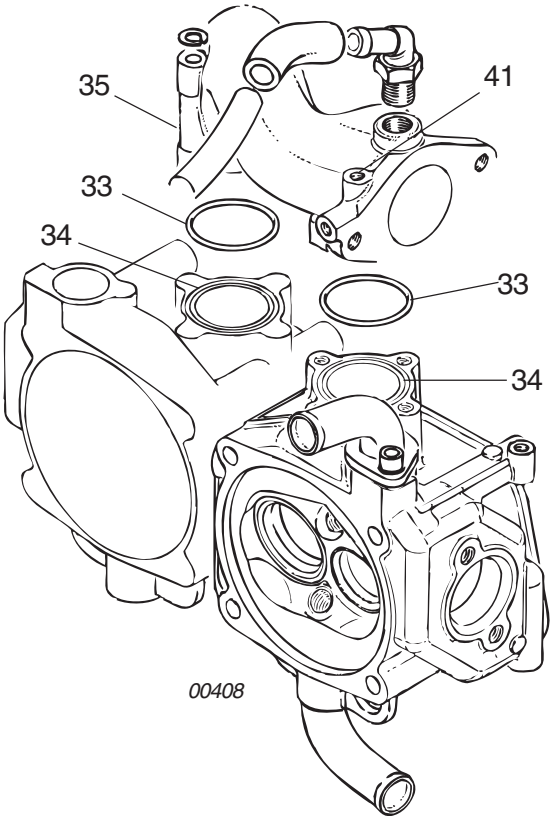

Fig. 74-27

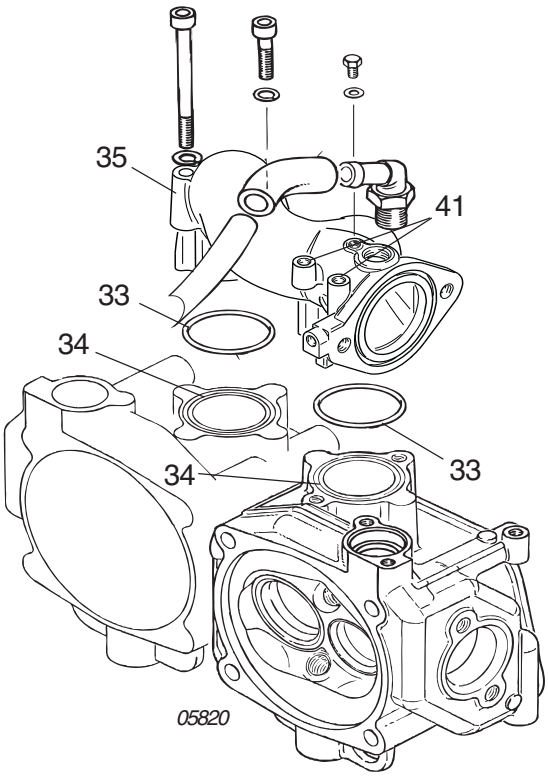

d02624

3.18) Trigger coil kit replacement

See Figs. 74-28, 74-29, 74-30, 74-31, 74-32 and 74-33.

Because of the shielding (6), the trigger coil kit (5) can be exchanged only as a complete set. Remove the attachment screws (7) with the distance sleeves (8) and cable clamps and fit new trigger coil kit. The stator (9) need not be removed in this case.

The trigger coils (1) are only adjustable to a limited extent. The gap (2) between trigger coil and trigger cam (3) is equal to dimension (IH02).

◆ NOTE: The trigger coil kit for older engine versions is no longer available. However, there is a new trigger coil kit with new trigger coils which will fit older engines.

For easier adjustment, on the new trigger coils ("clip on pick up“), the attachment has been changed from a cylindrical hole with centering (21) to a elongated hole (22).

The gap (IH02) between the trigger coil and the trigger cam must be adjusted using a feeler gauge. On trigger coil with oblong hole, 5 washers, part no. 827800 (23) are also needed for the fastening.

■ CAUTION : As the trigger coils are no longer centered and the screw has clearance in the oblong hole, during adjustment of the gap (IH02), all trigger coils must be pressed clockwise up to the limit stop.

■ CAUTION : Fit the cable clamps in such a way that there is adequate grounding between the shielding and the ignition housing.

See 74-00-00 sec. 4 and sec. 5 forms.

d05739

Fig. 74-28

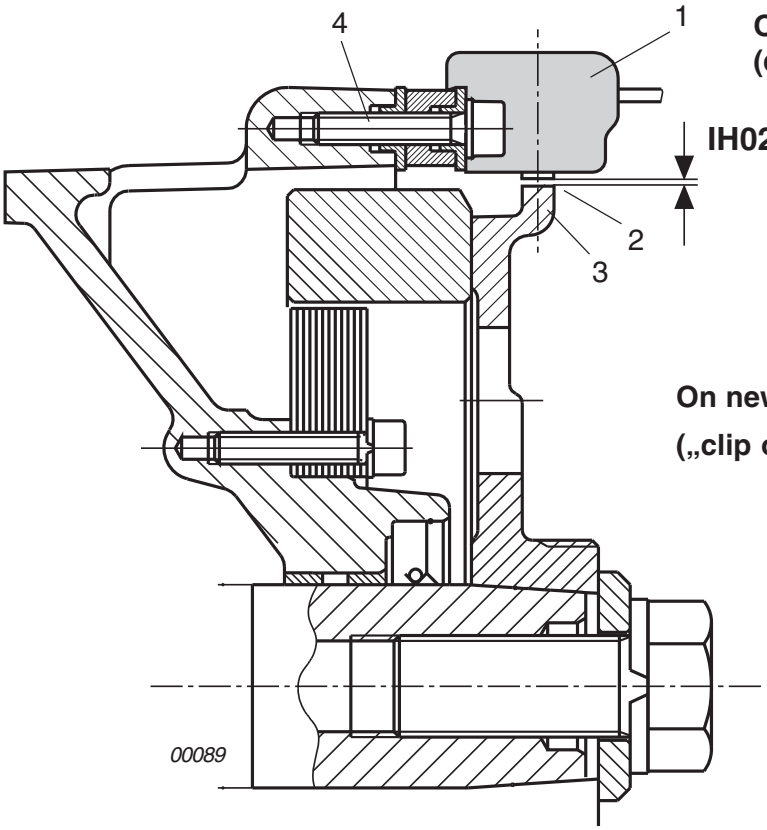

Fig. 74-29

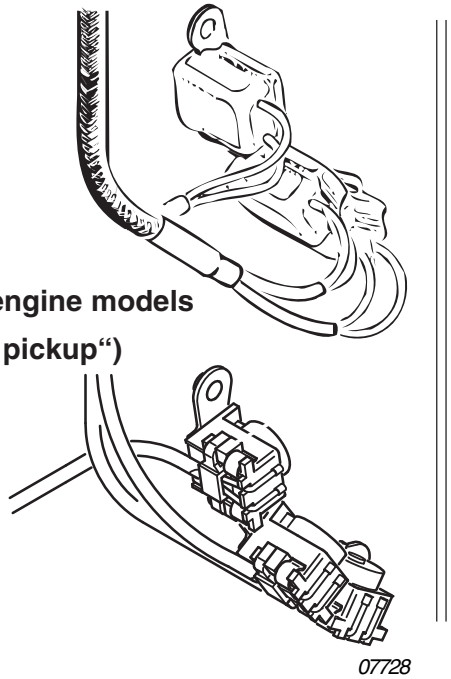

Fig. 74-30

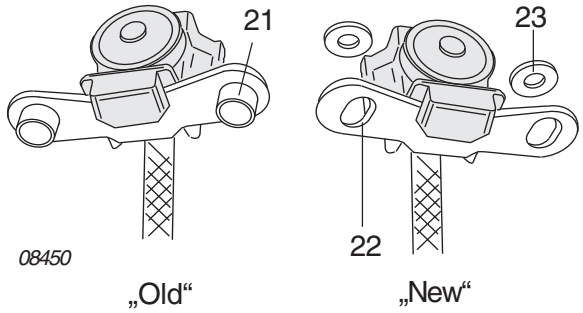

Fig. 74-31

Trigger coil alignment

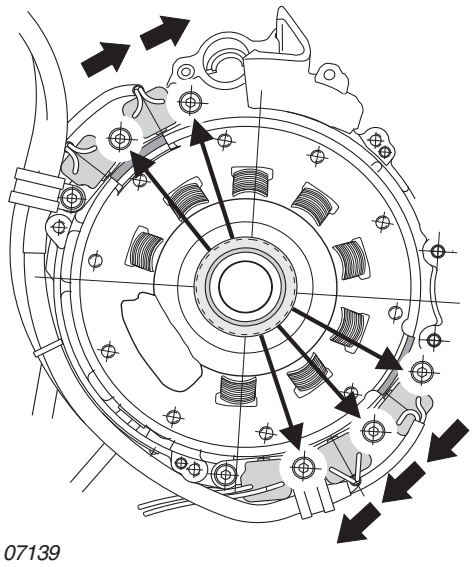

d05739

3.19) Stator removal and refitting

See Figs. 74-32, 74-33 and 74-34.

Lock crankshaft with the thread bolt, part no. 240880 See also 75-00-00.

Remove hex. screw (10) M16x1.5 together with lock washer and washers. Place protection piece, part no. 877410, on crankshaft, screw puller, part no. 877375, fully onto the thread (11) and press off fly wheel hub (12) together with magneto ring with the hex. screw of the puller. Store fly wheel hub assy. aside so that no foreign objects can be attracted by the magnet.

◆ NOTE: For removal of stator, the ignition housing need not be removed.

Remove four allen screws (13) and the cable clamp. Remove stator ass'y (9) from the centering (14) and carry out a visual inspection. Check cable assembly for damage. The contact faces (15) between stator and ignition housing must be clean to assure good grounding. Check the resistance values of the components, see 74-00-00 sec. 4.

Repair of the stator is not planned. When replacing the stator, pay attention to correct routing of the cable assembly. One each charging coil grounding cable is screwed with the stator fixation. At assembly, apply Lithium grease to the contact areas (20) of the stator and the screw heads.

d02624

3.20) Fly wheel hub'

See Fig. 74-32.

Carry out visual inspection of magneto inner side (16) and the taper surface (17). Under normal circumstances, dismantling of fly wheel hub is not necessary.

If it has been dismantled, clean the contact faces (18) Apply LOCTITE 243 to all 10 allen screws (19) (alternating 5 screws M6x30 and 5 screws M6x25) and screw together.

◆ NOTE: The hole pattern in the magneto ring is symmetrical and therefore it can be assembled in any position.

Check woodruff key in crankshaft for tight fit. Degrease tapers of crankshaft and fly wheel hub and apply LOCTITE 243 sparingly.

Fit fly wheel on assy. Apply grease on the contact face of the washer 17/36/5 (20) and of the lock washer 16 (21). Screw in hex. screw M16x1.5 (10) with washer 17/36/5 and lock washer 16 and immediately tighten to 45 Nm (33.2 ft.lb) +180° angle to rotation.

■ CAUTION : The woodruff key must remain in the groove.

Adjust the air gap of the external triggers with feeler gauge to dimension (1H02). Check external trigger coils for correct axial position with reference to the trigger cam of the fly wheel hub. Offset must not exceed dimension (IH03), see 74-00-00 sec. 3.18.

See 74-00-00 sec. 4.

d05739

Older engine models

Fig. 74-32

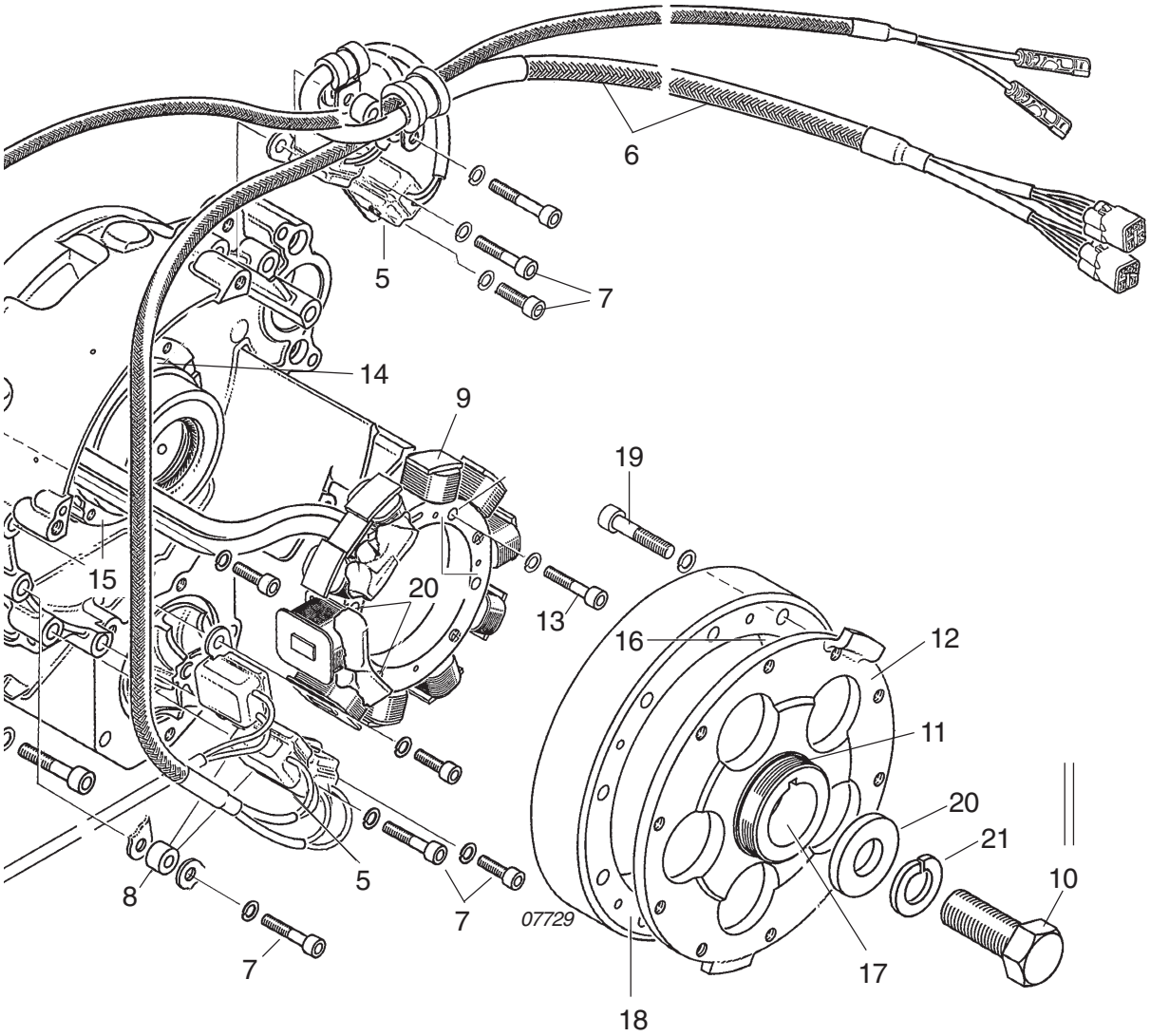

d04353

New engine models

Fig. 74-33

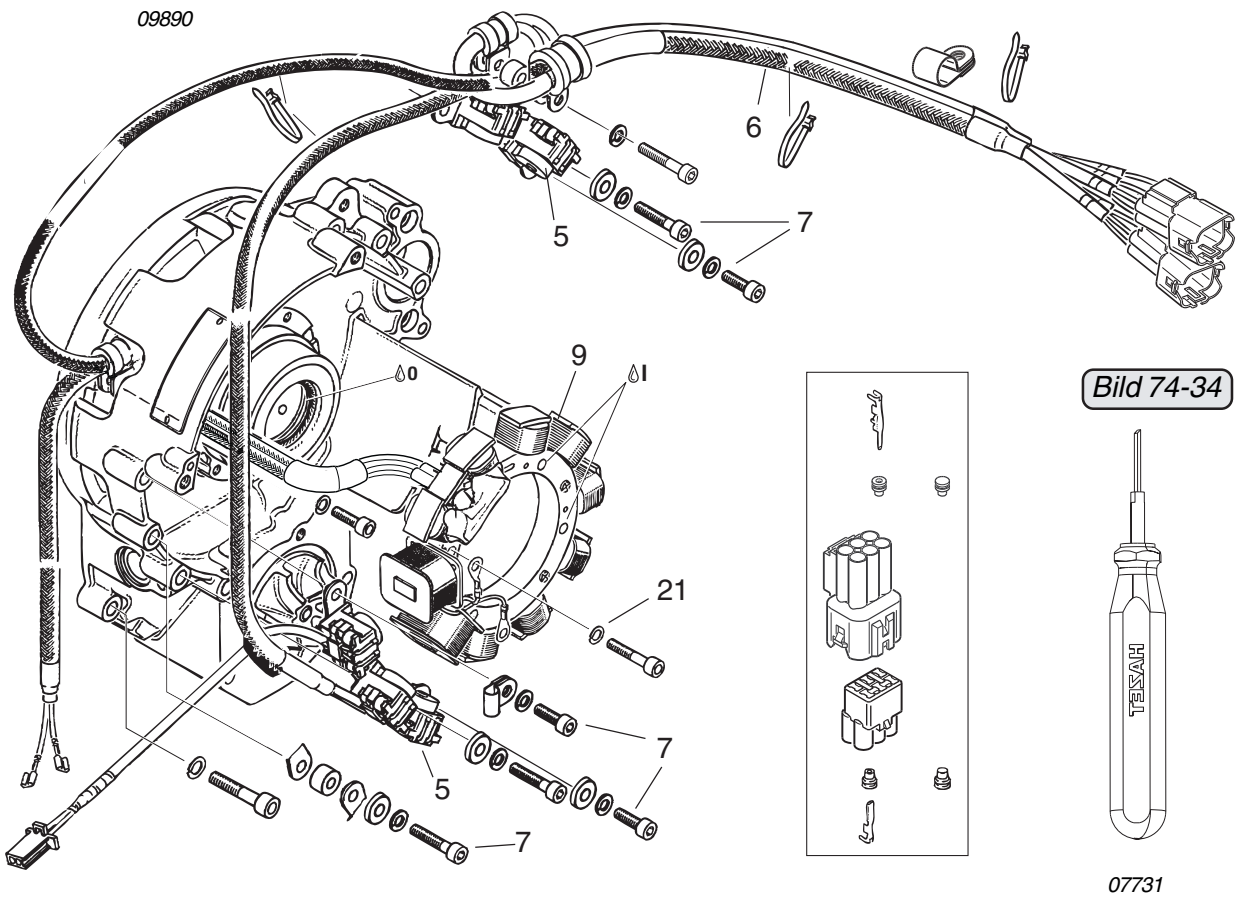

d05739

3.21) Interference suppression box (only on the 912 Series)

See Fig. 74-35.

◆ NOTE: Fitted in serial production up to 1995!

3.21.1) Interference suppression box dismantling

The interference suppression box contains two electronic boxes, four dual ignition coils and two capacitors. Each interference suppression box bears a consecutive serial number on the cover. Always quote this serial number in the event of inquiries.

Before removal, all eight ignition cables must be marked as shown on the cover to ensure correct reassembly. Remove the 3 countersunk screws M4x12 and take off the top terminal strip. Now the individual ignition cables can be replaced as necessary.

Mark and pull off all connections for the ignition coils. Remove the four countersunk screws M4x12 on the bottom side of the electronic box. Unscrew the grounding cable at the ignition coil. Now the complete ignition coil group can be taken out. If necessary, the electronic boxes can also be removed after closing the shorting cables on the capacitors. Check the capacitors and replace if necessary. Now all individual parts can be inspected.

d02624

3.21.2) Interference suppression box wiring diagram

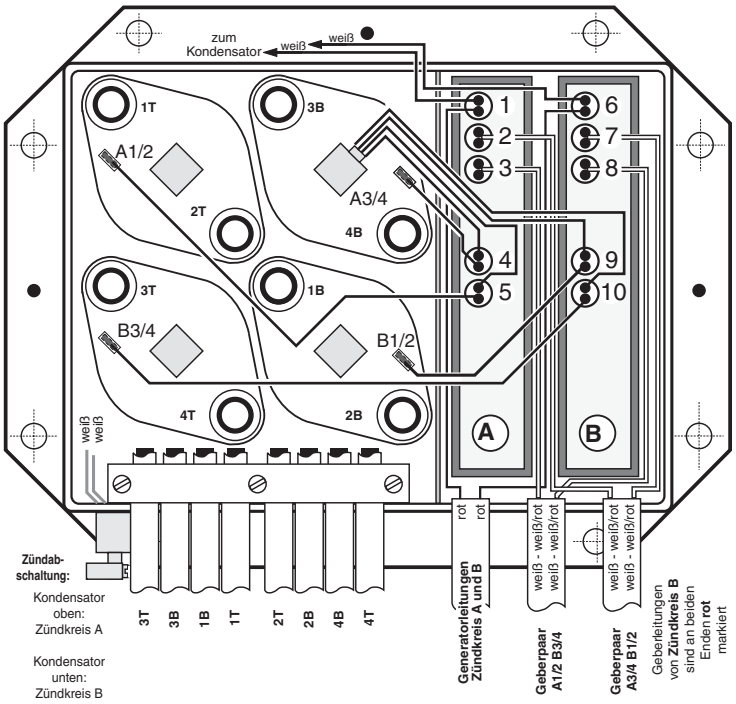

04787

Fig. 74-35

IGNITION CIRCUIT A

(1) alternator cable, red
shorting cable, white

(2) pick-up cable
white, for ignition circuit A-Cyl. 3
white/red, for ignition circuit A-Cyl. 4

(3) pick-up cable
white, for ignition circuit A-Cyl. 1
white/red, for ignition circuit A-Cyl. 2

(4) primary cable for ignition coil,
ignition circuit A, Cyl. 3/4, black (ground)
ignition circuit A, Cyl. 3/4, white

(5) primary cable for ignition coil,
ignition circuit A, Cyl. 1/2, black (ground)
ignition circuit A, Cyl. 1/2, white

IGNITION CIRCUIT B

(6) alternator cable, red (from stator)
shorting cable, white (to capacitor)

(7) pick-up cable
white, for ignition circuit B-Cyl. 1
white/red, for ignition circuit B-Cyl. 2

(8) pick-up cable
white, for ignition circuit B-Cyl. 3
white/red, for ignition circuit B-Cyl. 4

(9) primary cable for ignition coil,
ignition circuit B, Cyl. 1/2, black (ground)
ignition circuit B, Cyl. 1/2, white

(10) primary cable for ignition coil,
ignition circuit B, Cyl. 3/4, black (ground)
ignition circuit B, Cyl. 3/4, white

d02624

3.21.3) Interference suppression box assembly

The interference suppression box is assembled in reverse order. Always observe the wiring diagram for the interference suppression box. Lithiumbase grease must be applied to all cable connections to prevent leakage current.

Push both electronic boxes into the suppression box housing and position the pads. Connect grounding cables and primary cables to the ignition coils. Attach ignition coil set in the suppression housing with 4 countersunk screws M4x12. Secure countersunk screws with LOCTITE 243.

Arrange ignition cables on the bottom part of the terminal strip as shown in the wiring diagram and the description on the interference suppression box cover and attach with 3 countersunk screws M4x8. Assemble complete retaining strip in the interference suppression box with two allen screws M4x12. Secure all screws in the box with LOCTITE 221. Attach ignition cables **1T** and **3B** to the ignition cable support with tie wraps.

3.21.4) Interference suppression box fitting

For safety reasons, the interference suppression box must not be exposed to ambient temperatures higher than 60 °C (140 °F), and due to vibration, it should be installed in the cockpit. If the box has to be installed on the engine due to lack of space, vibration damping elements must be fitted. Check all grounding from the interference suppression box to the engine and if necessary, clean the contact faces and assemble with toothed lock washers. See Service Instruction SI 25-1994.

◆ NOTE: On models from the year 92 onwards, resistance spark plug 12mm (.47 in.) DCPR7E is fitted, see SB-912-001,“Engine type 912 A, Ignition unit with resistor spark plug“, latest issue.

d05739

3.22) Rev counter and ignition trigger coils

See Figs. 74-36 and 74-37.

◆ NOTE: All 5 trigger coils are of equal design. Therefore this checking procedure is valid for the ignition trigger coils too.

The rev counter trigger coil (3) is fitted on the ignition housing.

- Inspect for physical damage.
- Inspect all connections

■ CAUTION: Any parts which have suffered physical damage or are not functioning correctly must be replaced without delay. For measurement values, see 74-00-00 sec. 3.12.

Fig. 74-36

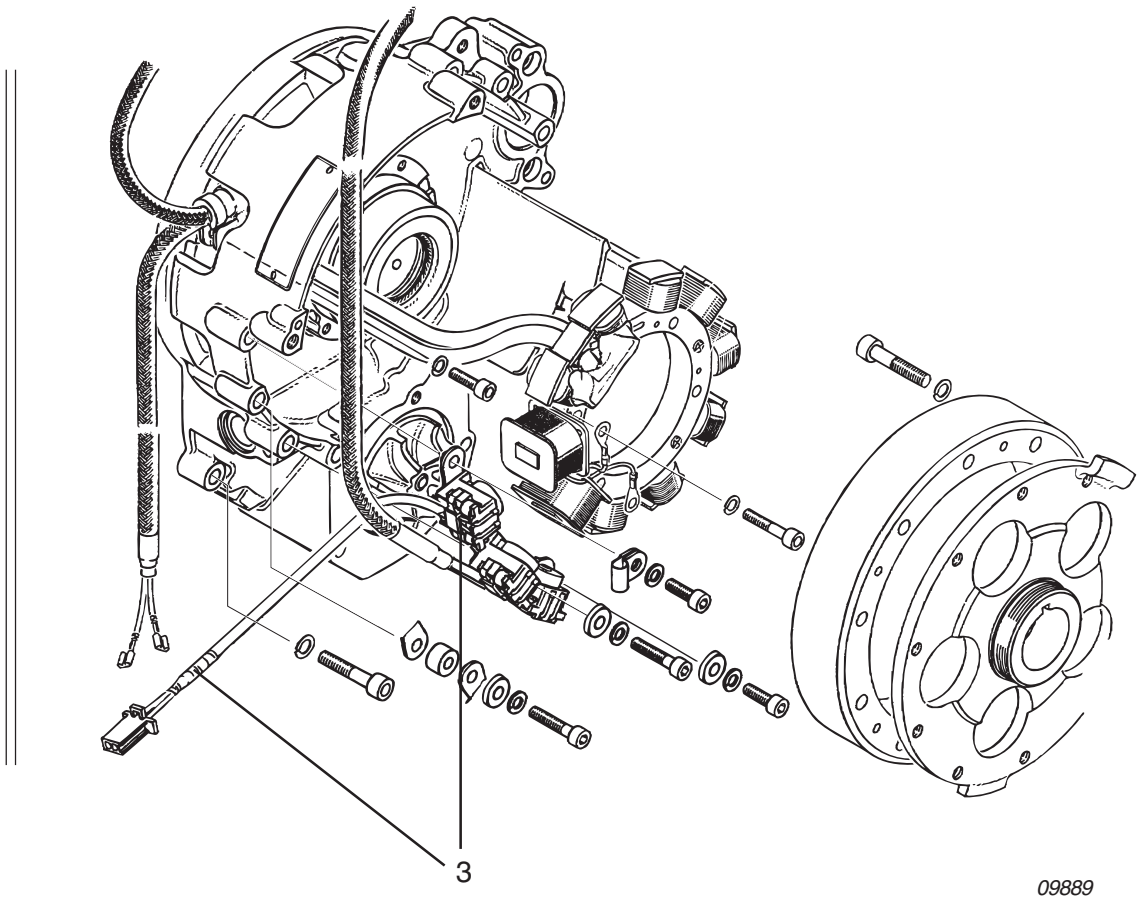

Fig. 74-37

Fig. 74-37 shows oscilloscope images of the rev counter signal at different loads and speeds.

Speed 500 rpm (load 100 Ω)

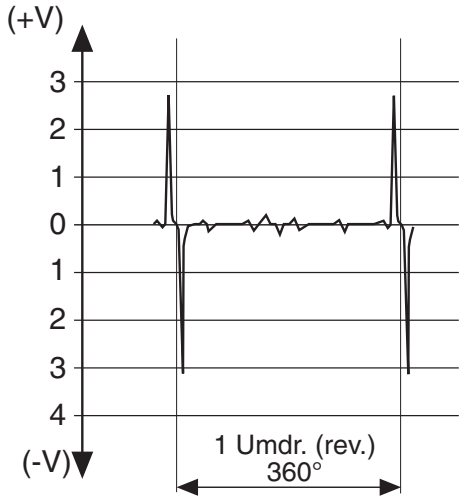

Speed 6000 rpm (load 100 kΩ)

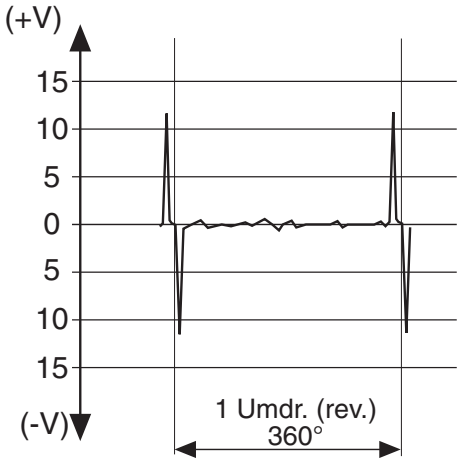

Speed 500 rpm (load 100 kΩ)

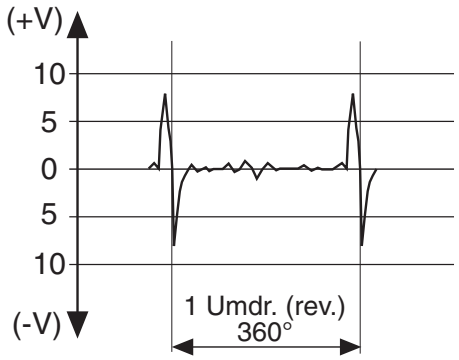

speed 6000 rpm (load 100 Ω)

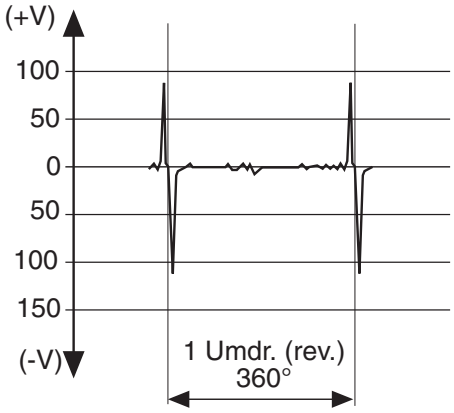

00219

d02624

3.23) External alternator (optional on 912/914 Series)

3.23.1) V-belt pulley removal

See Fig. 74-38.

After removal of the propeller, the V-belt pulley (3) remains loose on the propeller flange (2).

After removal of the 8 allen screws M5x16 (7) with the lock washers (8), the two pulley carrier plates (4), the V-belt pulley(3) and the narrow V-belt (1) can be taken off.

3.23.2) Alternator removal

Remove the two hex. screws M8x20 (24) with the lock washers (25) and washers (26) and the tension bar (20) below the external alternator.

Remove the hex. screws M10x45 (18) and take off the alternator (15) with the washer (17).

Remove the two allen screws M8x20 (10) with the lock washers (11) and take off the alternator bracket (9).

The alternator support (12) is attached to the gearbox housing with 2 allen screws M6x50 (13), lock washers 6,4 (14). After removal of the attachment screws, it can be taken off.

3.23.3) V-belt pulley assembly

See Fig. 74-38.

Slide the pulley (3) fully over the propeller flange (2) and insert the V-belt 9.5x675 (1) loosely in the V-belt pulley.

Insert the two pulley carriers (4) with the centering (5) facing the inside (6) of the propeller flange and loosely preassemble the propeller with the two pulley carriers.

Push the V-belt pulley (3) onto the two V-belt pulley carriers (4) and attach with the 8 allen screws M5x16 (7) with lock washer (8).

■ CAUTION: The two pulley carriers must be positioned precisely with the centering exactly on the inside (6) of the propeller flange.

Tighten the propeller with the preassembled pulley to the tightening torque recommended by the propeller manufacturer.

d04353

Fig. 74-38

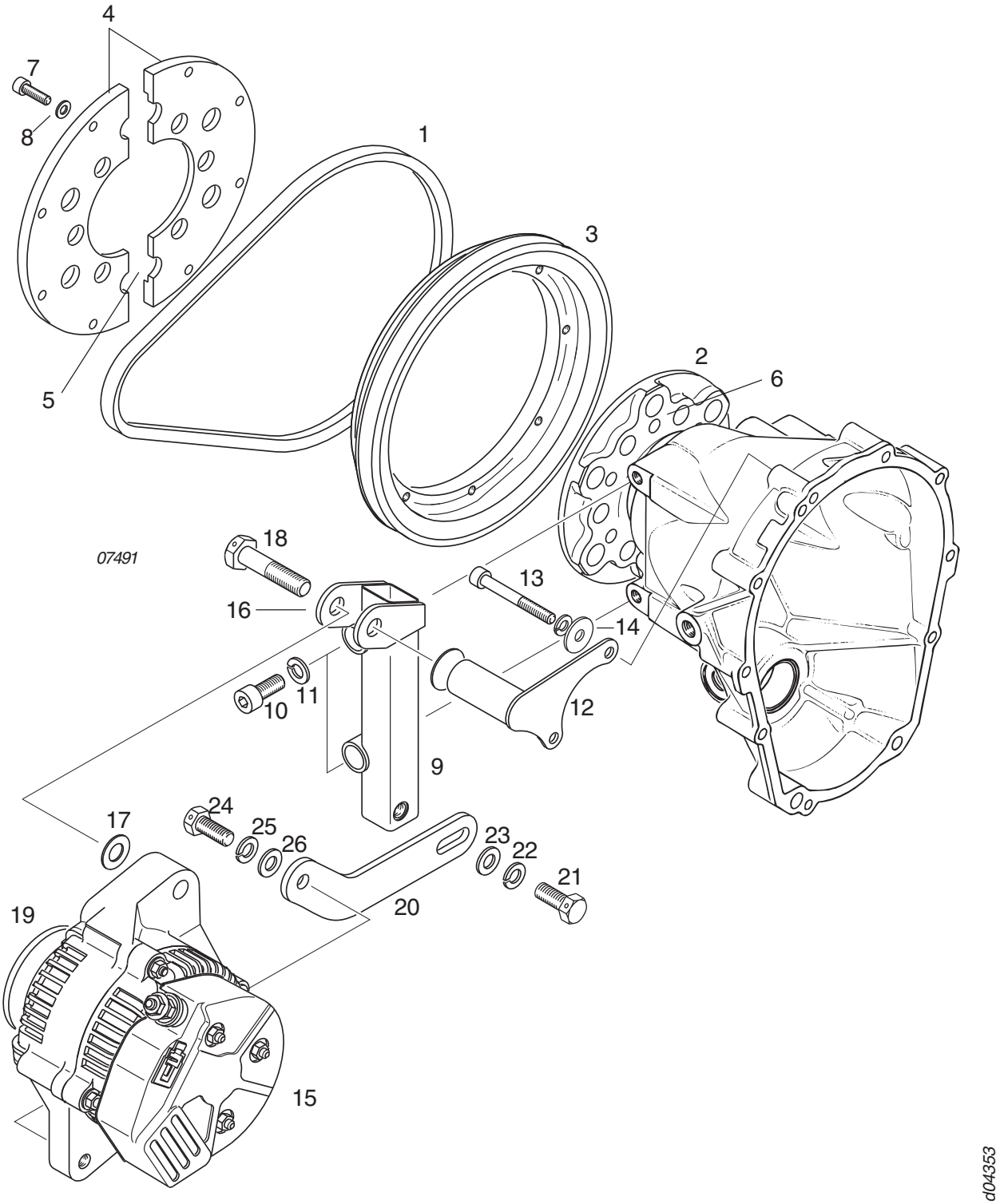
4
7
8
1
3
2
6
5
07491
18
13
16
14
11
10
12
9
24
17
25
26
23
22
21
20
19
15
d04353

3.23.4) Checking of the external generator

See Fig. 74-39

3.23.4.1) Check of the power output of the generator

At an alternator rpm of 5000 rpm the output has to be at least 40 amps (between Terminal B (2) and ground).

◆ NOTE 5000 rpm of the alternator is equivalent to 1680 rpm of the propeller shaft or the propeller respectively.

3.23.4.2) Mechanical check

■ CAUTION : Disconnect the cable from the negative battery terminal.

Remove hex-nut (1) from terminal B (2), also remove the three hex-screws (3). Remove the rear bearing plate(4). After loosening the crosshead screw (5) and removing the cover (3) the brush carrier and the rubber can be taken off. Messure the length of the brush carrier (6) (AL02) and record the result in the appendix. Check the shaft for grooves. It should not be possible to feel a ridge (9). Turn the shaft by hand. The bearings must be easy to move and must not show any resistance.

Fig. 74-39

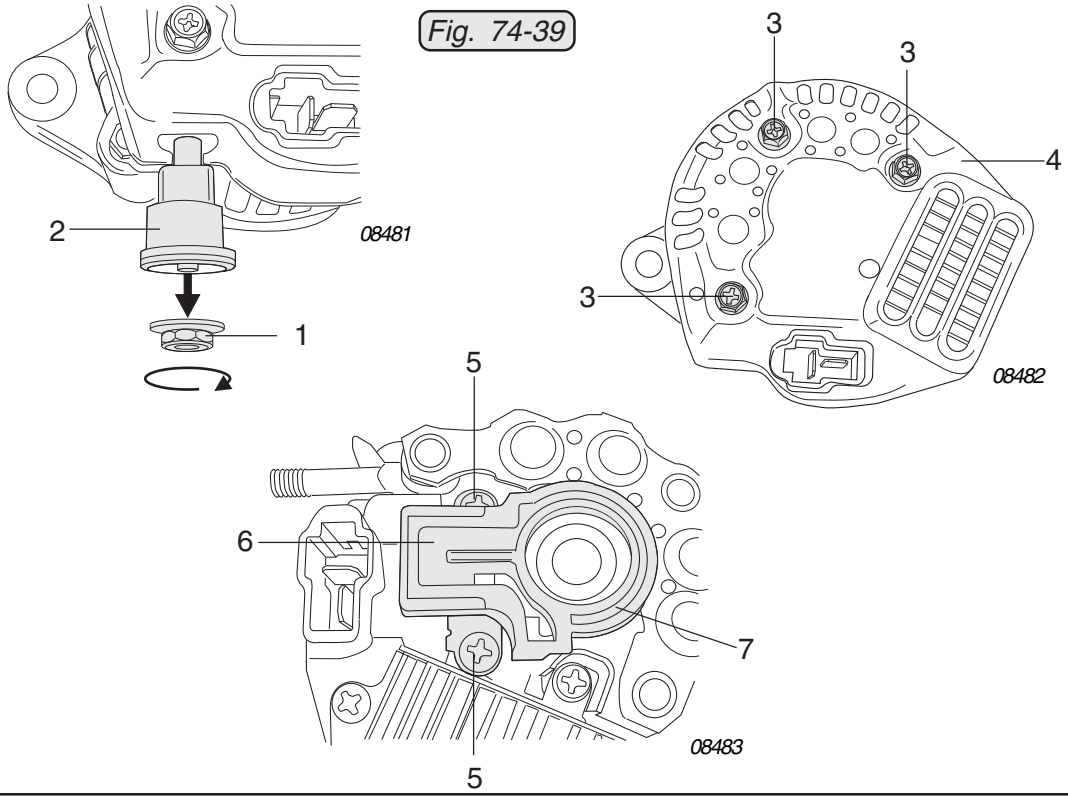

d04353

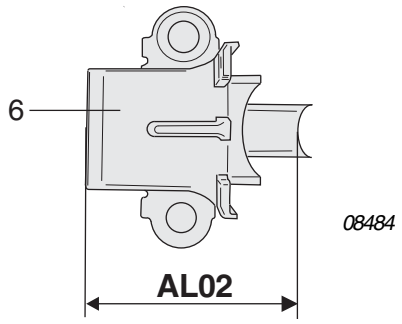

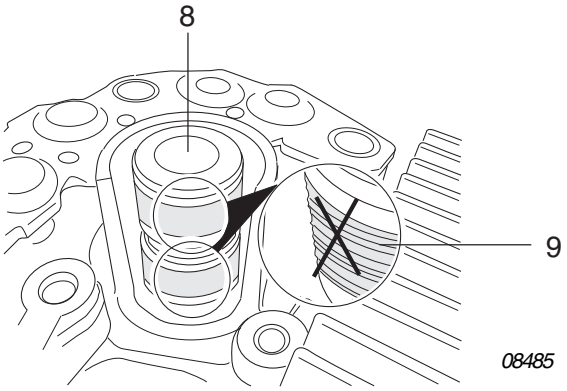

3.23.5) Alternator assembly

See Fig. 74-38.

Net loose preassemble the alternator bracket (9) on the gearbox housing with the two allen screws (10) M8x20 with high tension lock washer (11) VHZ 8. To attach the alternator support (12), the two allen screws M6x45 (13) with lock washers A6 are unscrewed from the propeller gearbox and then retightened to also hold the alternator support (12).

Push the alternator (15) into the bracket (16) of the alternator bracket, distance with the washer (17) 10.1/20/0.5 and loosely attach the alternator with the hex. screw (18) M10x45.

Now the two allen screws (10) M8 can be tightened to 22 Nm (195 in.lb) and the two allen screws (13) M6 to 10 Nm (90 in.lb) together with the lock washers and washer (14). Insert the V-belt (1) into the pulley of the alternator (19).

Loosely preassemble the tension bar (20) on the side with the oblong hole on the alternator bracket (9) with allen screws (21) M8x16, washer (23) 8.4 and lock washer A8 (22). Then loosely preassemble tension bar (20) on the alternator (15) with allen screw (24) M8x20, lock washer (25) and washer (26).

3.23.6) V-belt tension

See latest Maintenance Manual "Line Maintenance“ for the respective engine type.

d04353

4) Wear limits

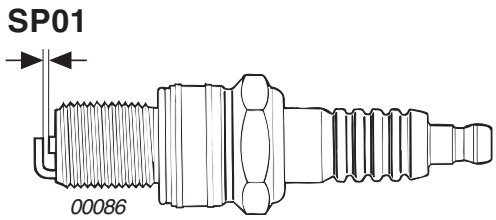

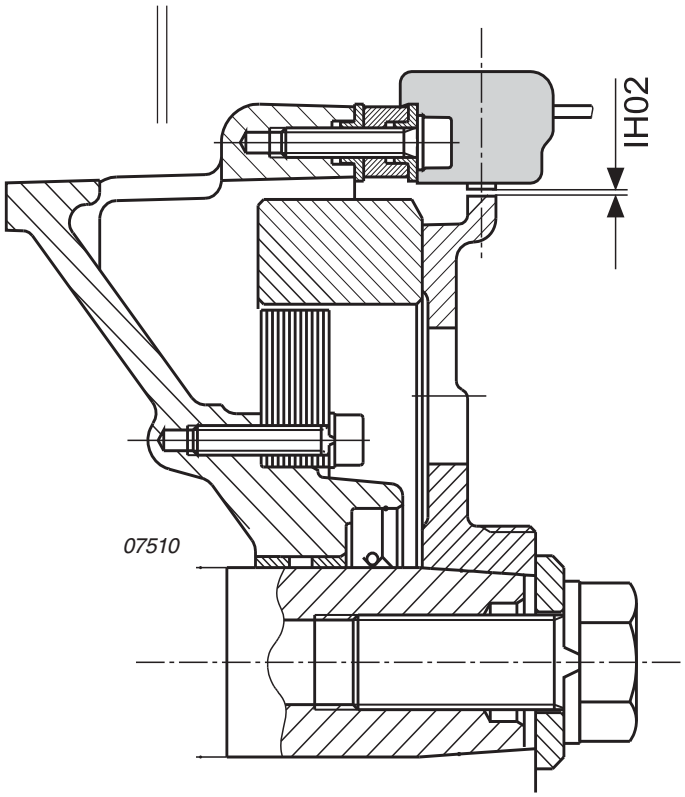

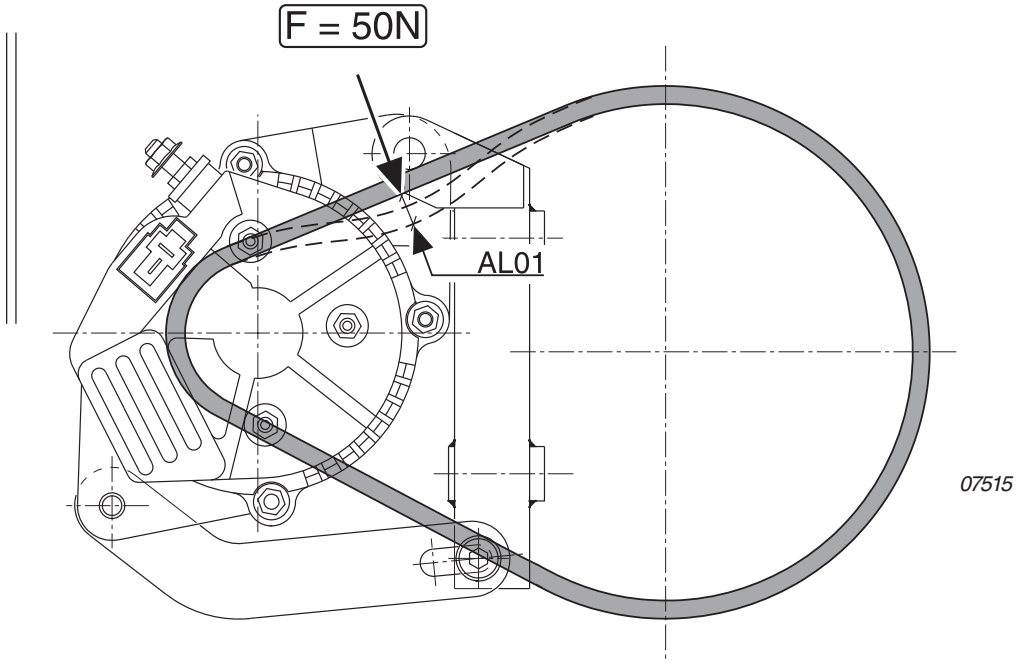

08696

Description	Code	Reading new		wear limit	wear limit		Readings			
		min	max	100%	50%					
Spark plug										
electrode gap 912 and 914	SP01	**0,6** **0**,022	**0,7** 0,028	**0,9** **0**,035		actual				
						renewed				
Ignition housing										
							A 1/2	A 3/4	B 1/2	B 3/4
trigger coil gap “old type”	IH02	**0,4** **0**,016	**0,5** **0**,020			actual				
						renewed				
trigger coil gap (with clamps)	IH02	**0,3** 0,012	**0,4** 0,016			actual				
						renewed				
External alternator										
Deflection of V-belt at a force of 50 N	AL01		**6,0** **0**,236			actual				
						renewed				

08487

Description	Code	Reading new		wear limit	wear limit		Readings
		min	max	100%	50%		
External alternator							
Length of coal brush	AI02	**30** 1,181		**23** 0,905	**26,5** 1,1043	actual	
						renewed	

d05739

5) Form Sheets

Fig. 74-39

d05739

Prüfprotokoll für Zündanlage / Inspection protocol for ignition unit

Type, S/N / engine type, S/N:					
Zündanlage, S/N.:				**TSN**	
Ignition unit, S/N:				**TSO**	
Sichtkontrolle: / **Visual check:**	**Bem. /**				
Geber-Zuordnung: / **Pick-up coordination:**	**Type**	Zündkreis / Ignition circuit			
		A 1/2	A 3/4	B 1/2	B 3/4
Zündspule: Einschaltdrehzahl max. 220 1/min	**912**	1T / 2T	3B / 4B	1B / 2B	3T / 4T
Ignition coil: start r.p.m. max. 220 r.p.m.	**914**	1T / 2T	3T / 4T	1B / 2B	3B / 4B
Abstellkontrolle: Kreis **A Ignition stop check:** Circuit **A**	Zündspule "AUS" / Spark "OFF"				
Abstellkontrolle: Kreis **B Ignition stop check:** Circuit **B**	Zündspule "AUS" / Spark "OFF"				
		A 1/2	A 3/4	B 1/2	B 3/4
Zündverstellung bei: (max. 1000 1/min					
Ignition variation at: (max. 1000 rpm)					
		Bem. / Rem.			
SMD-Modul oben.S/N,TNr: / **SMD-modul**, top S/N, p/n:	new/old				
SMD-Modul unten.S/N,TNr: / **SMD-modul bottom** S/N, p/n:	new/ old				
Anschlußbelegung gem. Schaltplan des letztgültigen Wartungshandbuches					
wire connection checked according Maintenance Manual, current issue					
Bemerkungen / Remarks:					
Unterschrift Prüfer / Signature Tester:					

Messwerte für die Zündanlage / Measurement values for the ignition unit

Nachstehende Messwerte können, nach Lösen der Steckverbindungen vor Ort kontrolliert werden / The following measurement values can be checked at the appropriate point after detaching the plug connections

Komponente / Part	**Anschlusskontakt/Connection**	**Widerstand/resistance**	
Zündspule primär / Primary ignition coil	gegen Masse/aigainst ground	0,1 ÷ 0,4 Ω	
Zündspule sekundär / Secondary ignition coil	Hochspannung/High voltage	6,1 ÷ 6,7 kΩ	
Kerzenstecker / Spark plug connector		4,4 ÷ 6,0 kΩ	

Stator mit Ohmmeter geprüft / Stator tested with Ohmmeter:

Ladespulen (2 Stück) Zündung / Charging coils (2 pieces) Ignition	Kreis **A rot** Circuit **A red**	gegen Masse	soll / nom.	
	Kreis **B rot** Circuit **B red**	against ground	3,2 ÷ 4,5 Ω	
Generatorspulen (8 Stk.) / Generator coils (8 pieces)	in Serie (gelb-gelb) / in series (yel-yel)		0,1 ÷ 0,8 Ω	
	gelb-Masse/ yellow-ground gegen Masse /against ground		∞	

Prüflauf mit Fremdregler und 12V 36 Ah Batterie (geladen) / test run with external regulator and 12V 36 Ah (loaded)

Drehzahl / speed RPM R.P.M	Lampenbelastung load / bulbs	Spannungsanzeige soll voltage nomin.	Spannungsanzeige ist voltage actual	
4000 1/min		14,0 ± 0,3 V		
4000 1/min	150W	13,2 ± 0,5 V		

Geberwiderstand (bei offener Steckverbindung)/Pick-up resistance (with opne connector) Geber alt/Pick up old 115-123 Ω Geber neu/Pickup new 230-250 Ω	A 1/2	A 3/4	B 1/2	B 3/4	Drehz./rev.

Hinweis: Die Messung erfolgt bei einer Umgebungstemperatur von +20°C bis +30°C
Note: measurements at ambient temperature between +20°C and +30°C

Datum / Date:

Effectivity: 912 / 914 Series

Engine S/N:

08247

NOTES

d02624

SECTION 75

COOLING SYSTEM

1) Table of contents

SECTION 75
COOLING SYSTEM

1) Table of contents ..... 75-00-00 / 1
2) Systems description ..... 75-00-00 / 3
2.1) Cooling system ..... 75-00-00 / 3
2.2) Connections for instrumentation ..... 75-00-00 / 4
2.2.1) Cylinder head temperature display ..... 75-00-00 / 4
3) Maintenance ..... 75-00-00 / 5
3.1) Water pump removal and inspection ..... 75-00-00 / 6
3.2) Water pump housing - dismantling and inspection ..... 75-00-00 / 7
3.3) Fly wheel hub removal ..... 75-00-00 / 9
3.4) Ignition housing removal ..... 75-00-00 / 9
3.5) Water pump shaft - removal ..... 75-00-00 / 9
3.6) Rotary seal - removal ..... 75-00-00 / 10
3.7) Rotary seal - installation ..... 75-00-00 / 10
3.8) Axial position of the water pump shaft ..... 75-00-00 / 12
3.9) Ignition housing assembly ..... 75-00-00 / 13
3.10) Water pump housing — reassembly ..... 75-00-00 / 13
3.11) Coolant hoses fitting ..... 75-00-00 / 14
3.12) Spring band hose clamps ..... 75-00-00 / 14
3.13) Radiator (optional 912/ 914 Series) ..... 75-00-00 / 14
3.14) Cooling air duct (optional 912/ 914 Series) ..... 75-00-00 / 14
3.15) Expansion tank ..... 75-00-00 / 15
3.16) Overflow bottle ..... 75-00-00 / 15
3.17) Temperature measurement system ..... 75-00-00 / 15
3.17.1) Cylinder head temperature sensor ..... 75-00-00 / 15
4) Wear limits ..... 75-00-00 / 19

d04354

NOTES

d02625

2) Systems description

2.1) Cooling system

See Fig. 75-1.

The cooling system of the ROTAX 912/914 Series is designed for liquid cooling of the cylinder heads and ram-air cooling of the cylinders.

The cooling system of the cylinder heads is a **closed** circuit with an expansion tank.

The coolant flow is forced by a water pump, driven from the camshaft, from the radiator to the cylinder heads. From the top of the cylinder heads, the coolant passes on to the expansion tank (1). Since the standard location of the radiator (2) is below engine level, the expansion tank located on top of the engine allows for coolant expansion.

◆ NOTE: When installing the radiator above engine level, see the latest respective Installation Manual.

The expansion tank is closed by a pressure cap (3) (with pressure relief valve and return valve). As the temperature of the coolant rises, the pressure relief valve opens and the coolant will flow via a hose at atmospheric pressure to the transparent overflow bottle (4). When it cools down, the coolant will be sucked back into the cooling circuit. The expansion tank (3) must always be full of coolant, and the coolant level in overflow bottle (4) should be between the two marks.

■ CAUTION : Too high pressure in the cooling system might cause damage. The hose between the expansion tank and the overflow tank must be free of blockages and the venting bore (5) must not be closed.

On engines of the 914 Series, the coolant hoses (6) for cyl. 1 and 2 are routed very close to the exhaust system and are therefore additionally protected by a heat resistant protection hose.

For winter operation, always use a coolant mixture with a sufficiently low freezing point (pour point). To ensure trouble-free engine start even at low temperatures, observe the special directives in the Operators Manual.

d02625

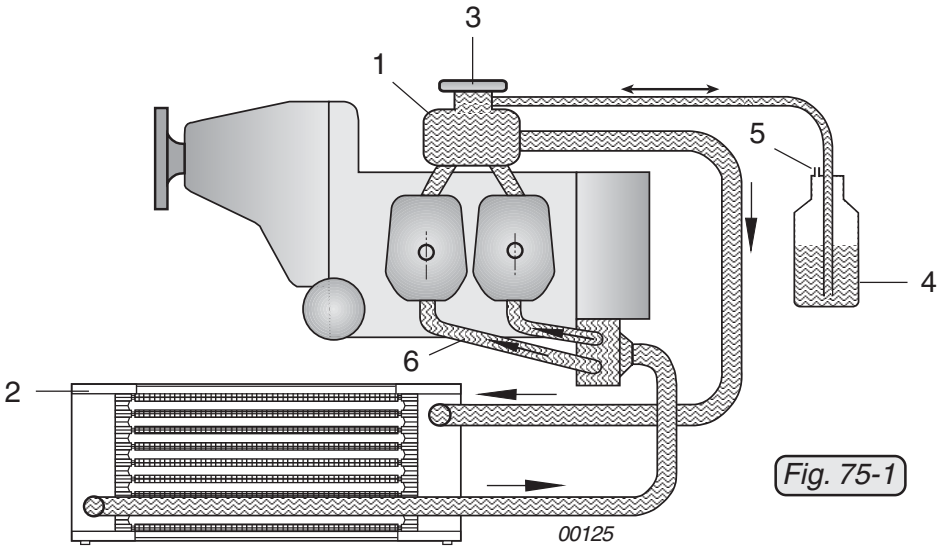

Fig. 75-1

2.2) Connections for instrumentation

■ CAUTION: Consult also the relevant sections on connections for instrumentation in the latest Installation Manual.

2.2.1) Cylinder head / coolant temperature display

There are temperature sensors screwed in to the cylinder heads of cylinders 2 and 3. In the course of further development and standardization, new cylinder heads with modifications in its mold have been introduced. Due to these changes the coolant temperature instead of the cylinder head temperature in the aluminium will be displayed. See latest Installation Manual and/or SI-912-020/SI-914-022 “Running modifications”.

◆ NOTE: Identifying of new cylinder heads: The electrical connection of the temperature sensor is pointing upwards. New configuration see Fig. 75-1/1. Old configuration see Fig. 75-1/2.

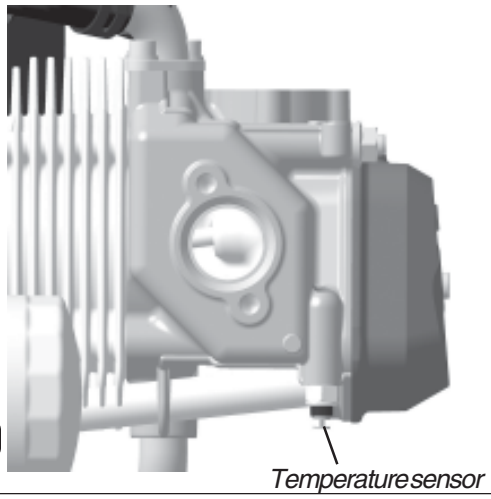

Fig. 75-1/2

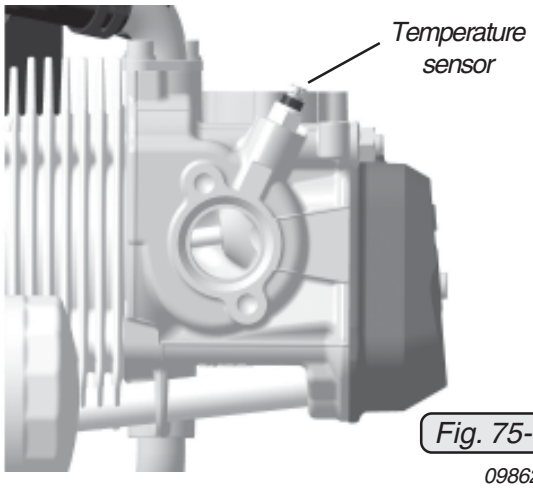

Fig. 75-1/1

09862_2

d05740

3) Maintenance

The following sections describe maintenance procedure for engines of the 912/914 Series above and beyond the maintenance and special checks, see corresponding Maintenance Manual (Line Maintenance) for the respective engine type, 912 Series or 914 Series, and the systems descriptions given hitherto. The description is subdivided into subsections and descriptions of the function of the various systems.

◆ NOTE: When installing the radiator above engine level, see the latest respective Installation Manual.

■ CAUTION : Check whether the overflow bottle has been modified in accordance with SB-912-039 and SB-914-025, “Modifications of the overflow bottle“ , latest issue.

◆ NOTE: When filling or replenishing the cooling system, coolant is always added via the expansion tank (3).

To drain the coolant, open the radiator cap and remove the lowest attachment screw (with sealing ring) of the water pump, as this is the lowest point of the cooling system of the engine assembly.

d02625

3.1) Water pump removal and inspection

See Fig. 75-2.

The water pump is integrated in the ignition housing. For repair work, fly wheel hub (1) and the ignition housing (2) must be removed. On some engine installations this requires removal or partial lifting of engine after loosening the engine suspension.

To remove the hex. screw (3) M16x1.,5 from the fly wheel hub, the crankshaft must be locked. See the corresponding Maintenance Manual (Line Maintenance) for the respective engine type, 912 Series or 914 Series.

Fig. 75-2

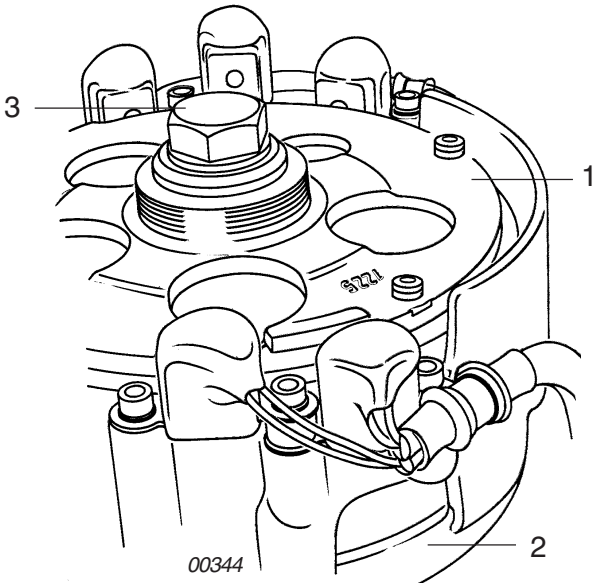

d02625

3.2) Water pump housing - dismantling and inspection

See Fig. 75-3

Remove the 2 allen screws M6x20 (1) of the water inlet elbow (2) and remove the elbow with the O-ring.

◆ NOTE: Mark the position of the water inlet elbow with a suitable pen (touchup pen).

Release all 4 screw hose clamps or spring band hose clamps of the water drainage hoses and pull them off water pump housing. The water pump housing (4) with gasket (5) can be taken off by removing 5 more allen screws M6 (3).

■ CAUTION: The allen screw (6) protrudes into the water compartment and is therefore of stainless steel and sealed with the sealing ring (7).

Check inside for traces of possible contact with impeller (8). The necessary clearance can be achieved by axial spacing of the water pump shaft. The washer (9) fitted behind the impeller is of stainless steel.

Remove the impeller (8) with special tool, part no 877295, with crankshaft locked, turning counter-clockwise.

Check the coolant fitting (10) screwed into the water pump housing for leakage, cracks and tight fit, replace if necessary. Mark the position of the bent socket. Warm up water pump housing to approx. 80 °C (180 °F) and remove the socket. Clean threads (11) carefully of LOCTITE residue, apply LOCTITE 243 to the new coolant fitting and fit it into position with at least 5 turns.

Normally, fittings with a bend angle of 45° are fitted. On the 914 engine and engines with ROTAX engine suspension frame, there is a fitting with a bend angle of 80° fitted at cylinder 2.

d02625

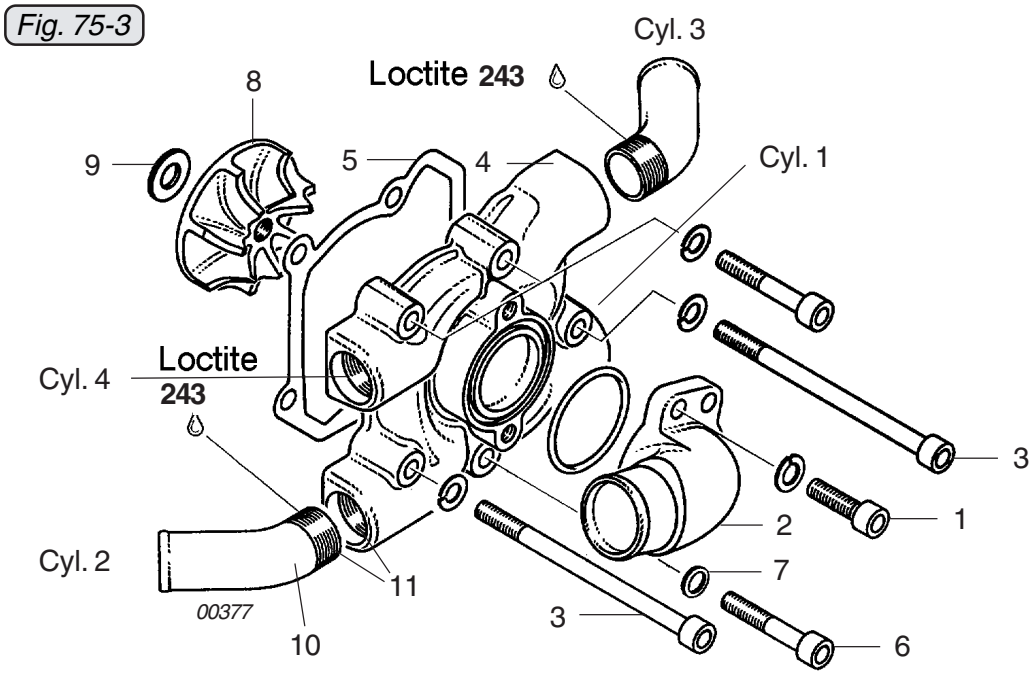
Fig. 75-3
Cyl. 3
Loctite 243
8
9
5
4
Cyl. 1
Cyl. 4
Loctite
243
3
1
2
7
Cyl. 2
11
00377
10
3
6

d02625

3.3) Fly wheel hub removal

See 72-00-00 sec. 3.1.

3.4) Ignition housing removal

See 72-00-00 sec. 3.3.

3.5) Water pump shaft - removal

See Figs. 75-4 and 75-5.

It is an advantage to loosen the impeller when dismantling the engine (with crankshaft locked). Otherwise, lock water pump drive gear (1) with a suitable tool. Unscrew impeller using socket part no. 877295 to avoid damage to the impeller blades. Place ignition cover on a suitable flat surface and press water pump shaft out with a suitable punch (2). Pull out the drive gear (1).

Inspect water pump shaft (3) for wear. Pay attention to possible corrosion at the thread end (4). If engine is run without coolant, formation of corrosion is possible in this position.

If corroded, replace the water pump shaft.

◆ NOTE: The shaft has a conical end (5).

Fig. 75-4

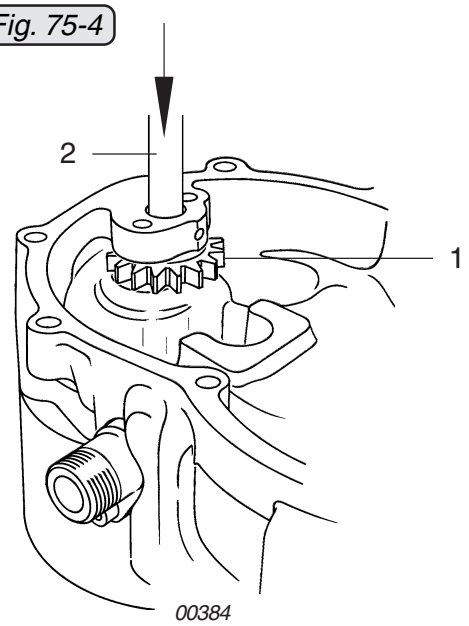

Fig. 75-5

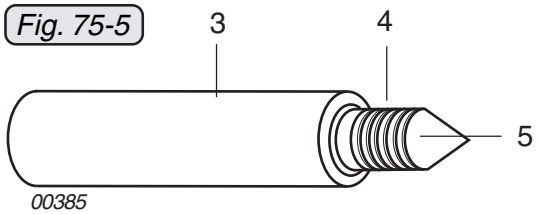

d02625

3.6) Rotary seal - removal

See Fig. 75-6.

Remove old shaft seal and rotary seal using 2 pins (1) of 5 mm (0.2 in.) diameter and a suitable punch (2). Shaft seal and rotary seal will be destroyed during removal and must be replaced.

3.7) Rotary seal - installation

See Figs. 75-7, 75-8, 75-9 and 75-10.

Press new shaft seal (1) 12x30x7, pre-oiled sealing lip showing inwards, into ignition housing using insertion jig (2), part no. 876510.

Carefully press rotary seal (3) on punch (4), part no 877258, and press the water pump shaft (5) carefully into the positive stop of the punch, conical end first.

Insert the pump gear (6) into the ignition housing with the wide collar pointing towards the crankcase sealing surface, see Fig. 75-10. Turn punch (4) around and push the water pump shaft (5) with the press fitted rotary seal (3) into the ignition housing. As you do so, position the drive gear so that it is flush with the pump shaft.

Now place the ignition housing on a flat surface and, using a hand press, press the water pump shaft in to the stop with max. 20 kN with punch (4), part no. 877258. Then turn ignition housing and press water pump shaft back using a 10 mm (3/16 inch) bolt until the collar of the water pump shaft is flush with the sealing surface of the water pump housing. Turn water pump shaft to check for clearance and free movement.

◆ NOTE: The spring of the rotary seal presses the water pump shaft outwards towards the sealing surface (11), depending on the axial clearance (14), see Fig. 75-10.

See also SI-912-001 and SI-914-001, “Installation of rotary water pump seal and water pump impeller“, latest issue.

d02625

Fig. 75-6

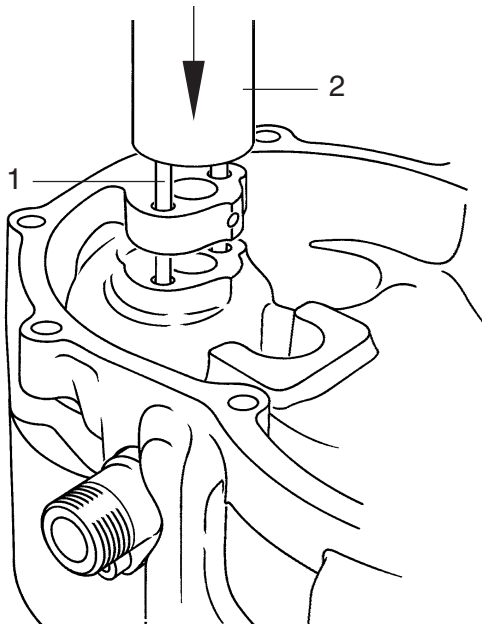

00386

Fig. 75-7

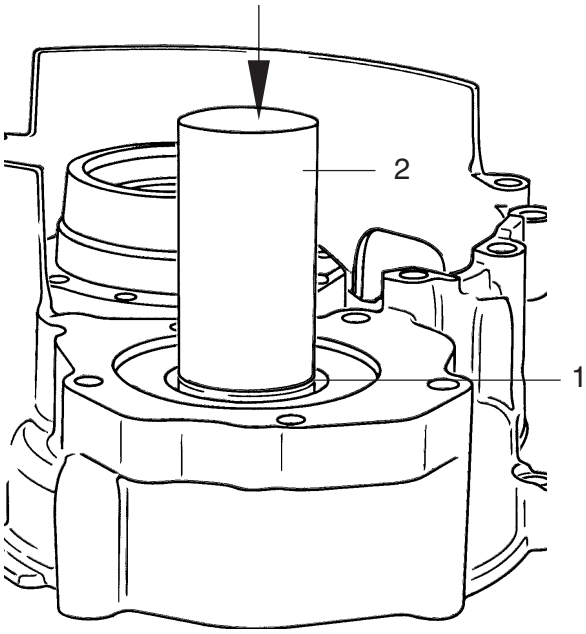

00387

Fig. 75-8

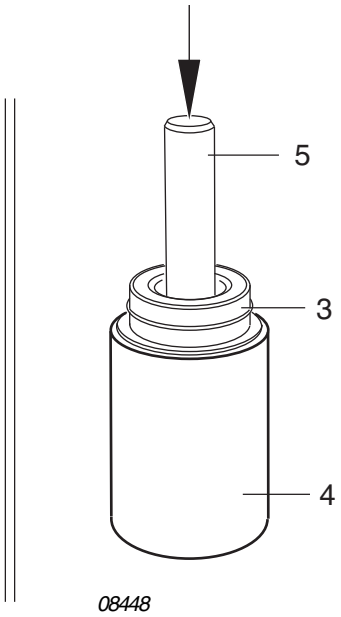

08448

Fig. 75-9

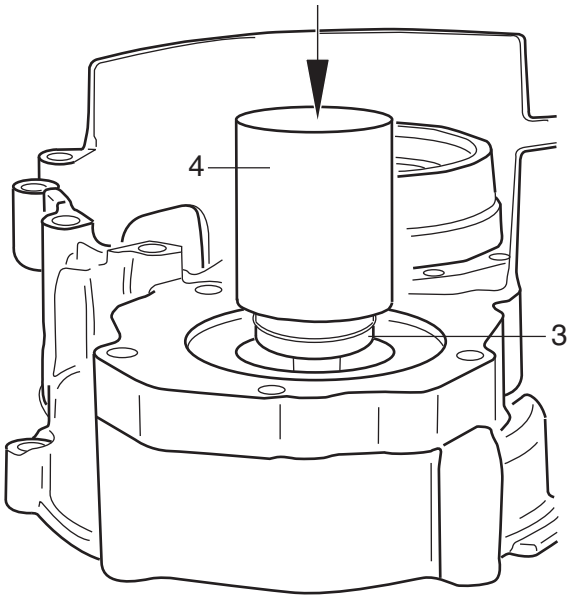

08451

d04354

3.8) Axial position of the water pump shaft

See Fig. 75-10

Check axial position of water pump shaft and pump gear. The step (6) of the gear points inward towards the crankcase.

◆ NOTE: To ensure the correct gap (8) (dimension WP02) between the impeller (9) and the water pump housing (10), make sure that the collar (7) of the water pump shaft is flush with the sealing surface (11) of the ignition cover (12).

If necessary, turn the ignition cover around and lay it on a planed hardened sheet with an 8 mm (0.32 in.) bore. Press the water pump shaft back as required with a ø10 mm (0.40 in.) bolt. Trial spin the installed pump shaft.

Place stainless steel shim (13) on the shaft, fit impeller (9), turning clockwise, and tighten with special tool, part no. 877295. Tightening torque 15 Nm (133 in.lb).

◆ NOTE: Check impeller (9) for out-of-round. If it is noticeably out-of-round, replace impeller or if necessary also the pump shaft.

See 75-00-00 sec. 4.

Fig. 75-10

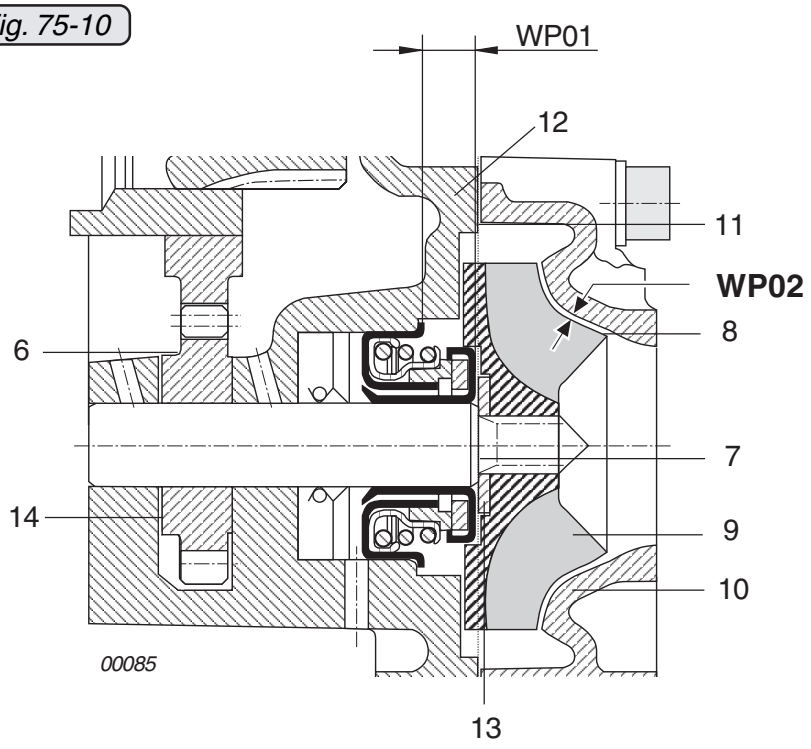

d02625

3.9) Ignition housing assembly

See 72-00-00 sec. 3.5.

3.10) Water pump housing — reassembly

See Fig. 75-11.

Position gasket (1), attach water pump housing (2) to the ignition housing with 2 allen screws (3) M6x90 and 3 allen screws (4) M6x35 together with lock washers, torque to 10 Nm (90 in.lb).

■ CAUTION : The bottom allen screw (5) M6x35 protrudes into the water chamber, so it is of stainless steel and fitted with a sealing ring (6).

Carry out a visual inspection to see whether the impeller scuffs in the pump housing. This can be recognized by scuffing traces in the pump housing or on the impeller. If necessary, the axial position of the water pump impeller can be corrected to achieve an optimum gap, see 75-00-00 sec. 3.8.

Insert O-ring (7) into water pump housing, fit the water inlet elbow (8) in the position marked before disassembly with 2 allen screws (9) M6x20 with lock washers. Tightening torque 10 Nm (90 in.lb).

◆ NOTE: The water inlet elbow is symmetrical and can, if required, be fitted in other positions.

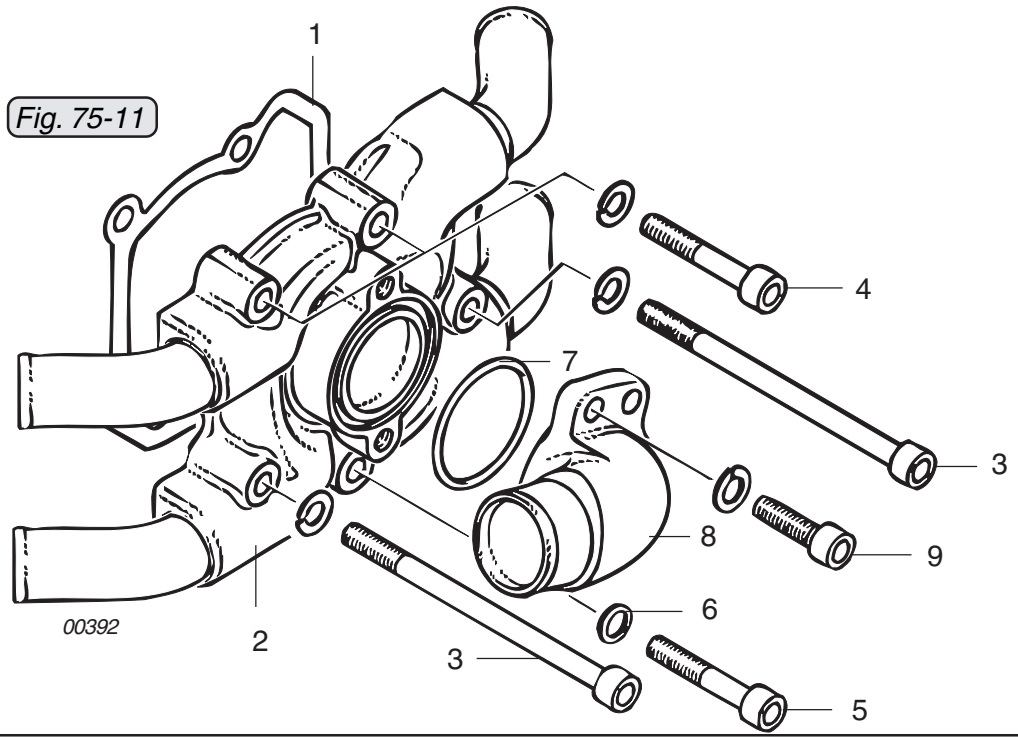

d02625

3.11) Coolant hoses fitting

See Fig. 75-13

■ CAUTION: The spring band hose clamps must be installed in the drawn origin position. (See sketch)

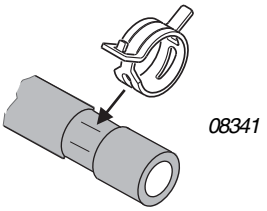

Fit all coolant hoses (1) coming from the expansion tank to the coolant exit on the cylinder heads (3) with spring band hose clamps (4). Also fit the coolant hoses between the water pump (6) and the coolant entry (7) into the cylinder heads with spring band hose clamps.

◆ NOTE: Position spring band hose clamps so that they cannot damage neighboring coolant hoses.

Use tool part no. 877840 (spring clamp pliers) or equivalent to mount the spring type hose clips.

On old engine designs the spring type of hose clips are not installed.

■ CAUTION: It is necessary to look out for a proper overlapping of the coolant hose and of the connecting tube.

Check the clips and hoses for tight fit and leaks. The spring type hose clips have to be mounted in such a way, so that chafing can not occur. If a governor is used then for the water tube at cylinder 1 a protection hose (8) has to be installed and secured with LOCTITE 480 or an equivalent adhesive.

3.12) Spring band hose clamps

Carry out visual inspection. Position the clamps so as to avoid contact and friction with neighboring parts.

Use a suitable tool for assembly. See 00-00-00 sec. 10.6.

d04779

3.13) Radiator (optional 912/ 914 Series)

Clean radiator elements and check for damage, straighten fins if necessary. In particular, check the hose connections and the support plates. Check for tightness if leaks are suspected.

3.14) Cooling air duct (optional 912/ 914 Series)

The cylinders are ram-air cooled. The cooling air is pushed during flight and by the propeller into the engine compartment and is distributed evenly by the cooling air duct to the individual cylinders. Carry out visual inspection for damage, cracks, chafing marks, burnt spots etc. In the event of noticeable damage, replace the cooling air duct.

3.15) Expansion tank

See Fig. 75-12

See latest valid Maintenance Manual “Line Maintenance“ of the corresponding engine type. On newer engines the expansion tank is in a different position. See therefore the latest issue of the Service Information “Running modification” SI-912-020 and SI-914-022 respectively.

◆ NOTE: On engines with the old expansion tank, the old hose locations and the old coolant hoses don’t have to be upgraded and can be continued to be used.

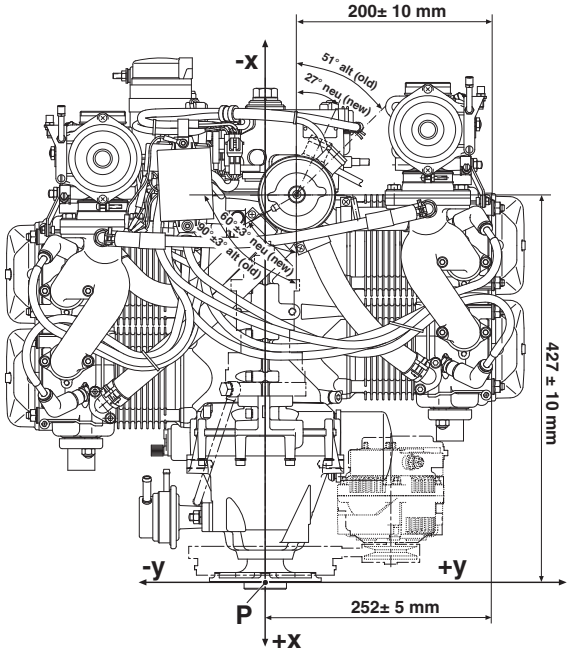

Fig. 75-12

04557

d04779

Fig. 75-13

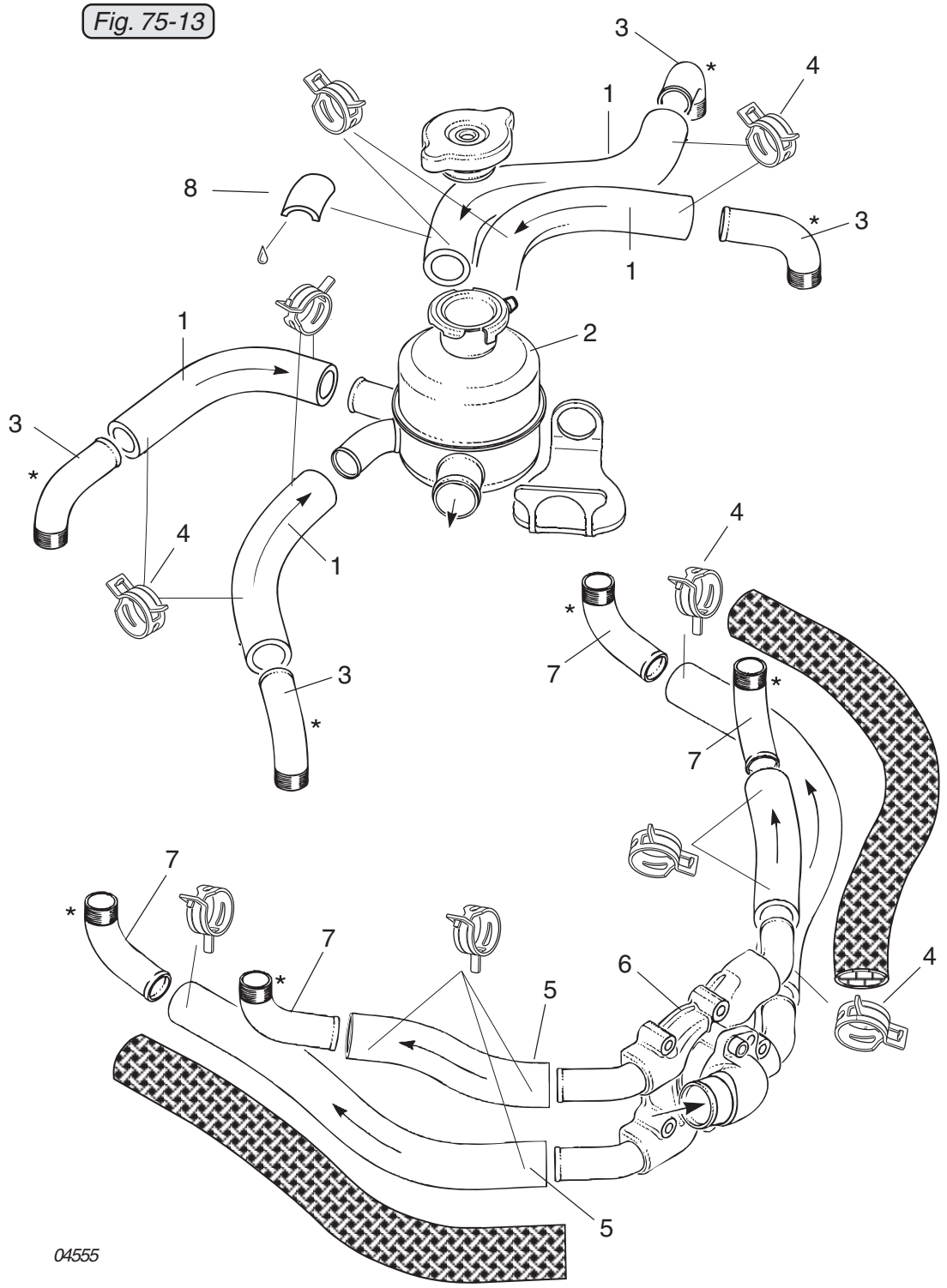

d04779

: LOCTITE 480

In the case of repair/overhaul it has to be considered that the old expansion tank part no. 922398 does not offer the space to install the spring hose type clamps this is due to limited space between the tube (cylinder 1 and cylinder 3).

Due to different positions for the supply/drain hoses leading to and from the expansion tank, it is necessary to have different hose lengths. Take care of the proper length of the hose and of its overlapping length with the connectors.

3.16) Overflow bottle

See latest Maintenance Manual “Line Maintenance” for the respective engine type.

■ CAUTION: Check whether the overflow bottle has been modified in accordance with SB-912-039 and SB-914-025, “Modifications of the overflow bottle”, latest issue.

3.17) Temperature measurement system

◆ NOTE: There are several temperature control points on ROTAX engines of the 912/914 Series. Refer to wiring diagram in Operators Manual.

3.17.1) Cylinder head / coolant temperature sensor

See Figs. 75-14, 75-14/1 and 75-15.

In the course of further development, the cylinder heads are made from new casting mold. At these, the temperature sensor is screwed on the top side. See latest SI-912-020/SI-914-022, “Running modifications“.

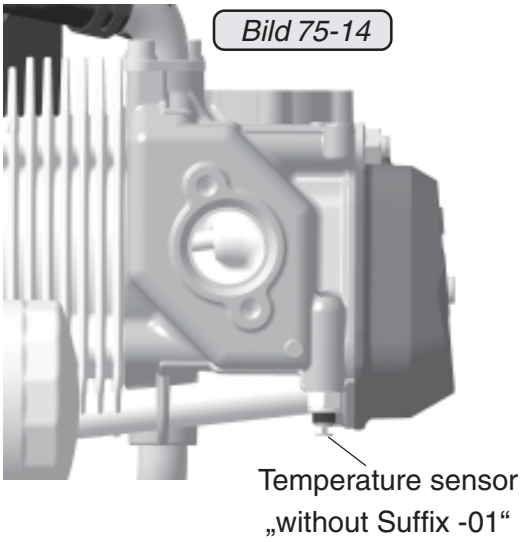

Bild 75-14

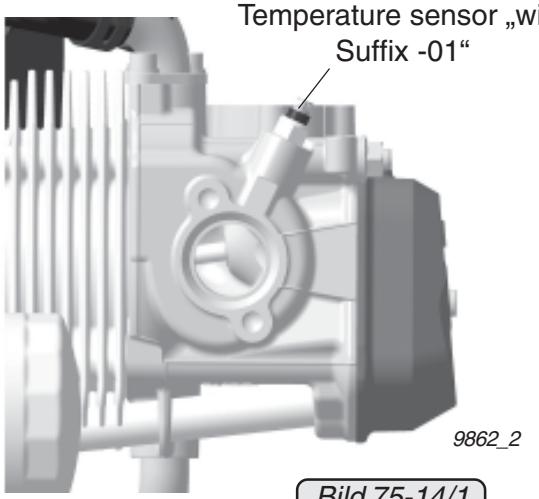

Bild 75-14/1

d05740

On assembly, tighten the temperature sensor to 7 Nm (62 in. lb). Secure screws with LOCTITE 243.

Fig. 75-15

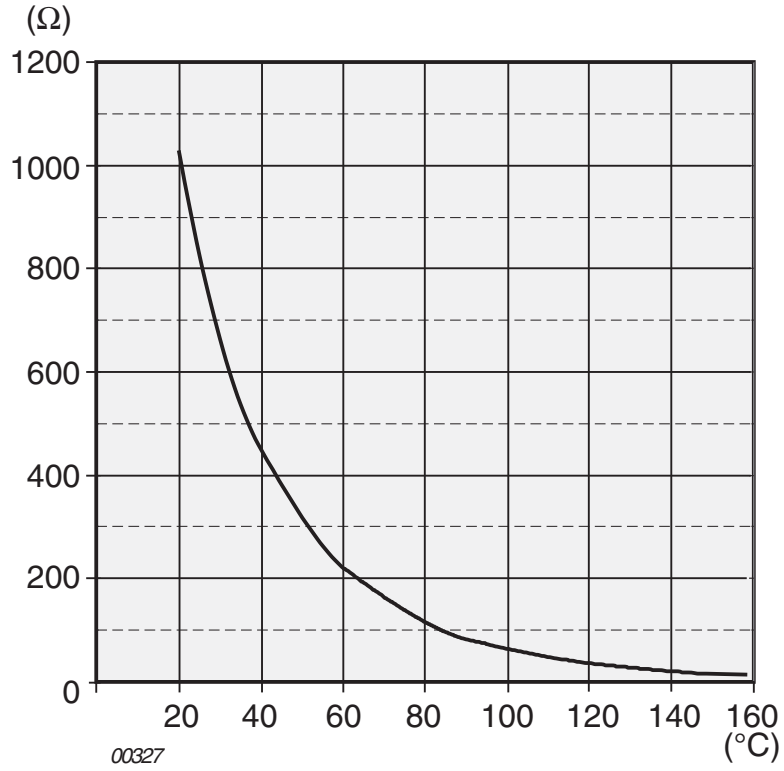

◆ NOTE: Grounding connection of the temp. sensor directly via the cylinder head.

For sensor resistance, see following graph of sensor resistance overtemperature.

deviation: max ± 10%

◆ NOTE: The different versions of the cylinder heads can be mixed installed, but make sure, if and at which position the cylinder head temperature and coolant temperature is measured. This also defines the naming of the indicating instrument with the appropriate temperature limit. See latest Installation Manual and/or SI-912-020/ SI-914-022 “Running modifications”.

d05740

4) Wear limits

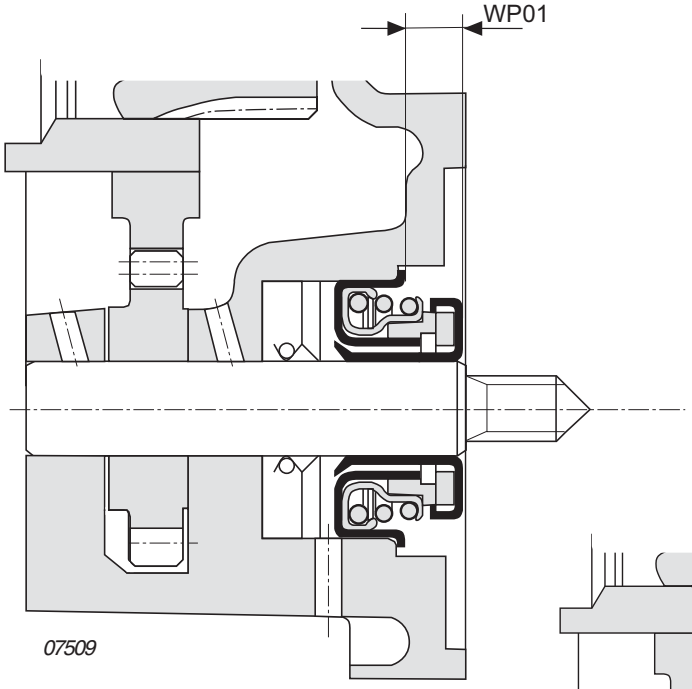

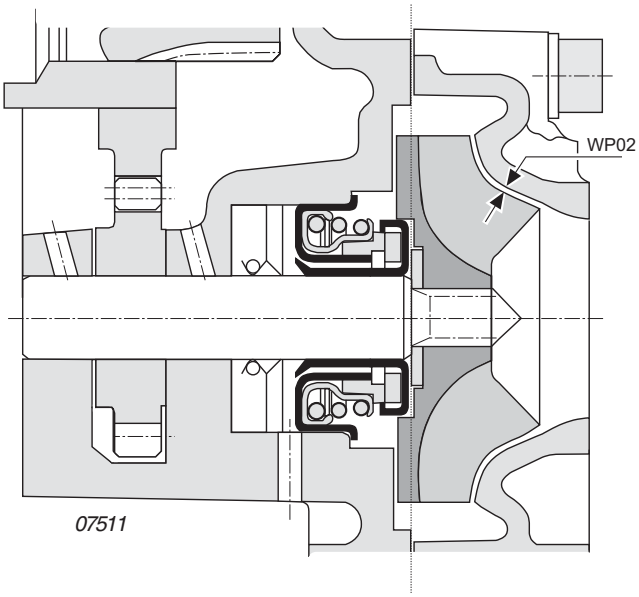

Description	Code	Reading new		wear limit	wear limit		Readings 07202
		min	max	100%	50%		
Water pump							
reference dim.	WP01	**8,55** 0,3366	**8,85** 0,3484	**8,85** 0,3484		**actual**	
						renewed	
impeller clearance	WP02	**0,3** 0,012	**0,5** 0,020	**0,7** 0,028	**0,6** 0,024	**actual**	
						renewed	

d02625

NOTES

d02625

SECTION 76

ENGINE CONTROL

1) Table of contents

SECTION 76
ENGINE CONTROL

1) Table of contents ..... 76-00-00 / 1
2) Systems description ..... 76-00-00 / 3
2.1) Turbocharger control (only on 914 Series) ..... 76-00-00 / 3
2.1.1) Control of boost pressure in the airbox ..... 76-00-00 / 3
2.1.2) Target pressure reduction ..... 76-00-00 / 8
2.1.2.1) Target pressure reduction at overspeeding ..... 76-00-00 / 8
2.1.2.2) Target pressure reduction at excessive airbox temperature ..... 76-00-00 / 9
2.1.2.3) Target pressure reduction by limiting the compressor pressure ratio ..... 76-00-00 / 10
2.1.3) Lamp output connections on the TCU ..... 76-00-00 / 11
2.1.4) Three-way solenoid valve ..... 76-00-00 / 12
2.1.5) PC interface ..... 76-00-00 / 12
3) Maintenance ..... 76-00-00 / 13
3.1) Control system of the turbocharger (only on 914 Series) ..... 76-00-00 / 13
3.1.1) Checking the turbocharger control unit (TCU) by means of a communication program ..... 76-00-00 / 13
3.1.1.1) Functions of the communication program ..... 76-00-00 / 13
3.1.1.2) Required items ..... 76-00-00 / 13
3.1.1.3) Scope of the communication program ..... 76-00-00 / 15
3.1.1.4) Application of the communication program ..... 76-00-00 / 17
3.1.1.5) Checking the components of the turbocharger control 76-00-00 / 28
3.1.1.6) Checking the throttle valve position ..... 76-00-00 / 29
3.1.1.7) Recalibration of the throttle position ..... 76-00-00 / 31

d02626

3.1.2) Static check of the turbocharger control ..... 76-00-00 / 32
3.1.2.1) Turbo control unit (TCU) ..... 76-00-00 / 32
3.1.2.2) Caution lamps ..... 76-00-00 / 34
3.1.2.3) Wiring harness ..... 76-00-00 / 35
3.1.2.4) Throttle potentiometer ..... 76-00-00 / 37
3.1.2.5) Resistance thermometer (Intake air temperature sensor) ..... 76-00-00 / 42
3.1.2.6) Pressure sensors ..... 76-00-00 / 44
3.1.2.7) Servo motor ..... 76-00-00 / 50
3.1.2.8) Circuit breaker for servo motor ..... 76-00-00 / 52
3.1.2.9) Three-way solenoid valve ..... 76-00-00 / 53
3.2) Wiring diagrams ..... 76-00-00 / 58
3.2.1 Engine external (on the 914 Series) ..... 76-00-00 / 58
4) Form Sheets ..... 76-00-00 / 59

d04355

2) Systems description

2.1) Turbocharger control (only on 914 Series)

2.1.1) Control of boost pressure in the airbox

See Figs. 76-1, 76-2, 76-3, 76, -4 and 76-5.

The position of the carburetor throttle valves is signalled by a potentiometer to the TCU, where it is transformed in a chosen pattern into target pressure in the airbox.

◆ NOTE: The positions of the throttle valve are divided into a linear progression from 0 to 115 %.

After comparison of the actual airbox pressure with the target pressure, the position of the wastegate will be varied by a servo motor until the pressures are equal.

◆ NOTE: With carb throttle valve closed, a high boost pressure is specified although hardly any exhaust gas energy is available. The wastegate will then be completely closed and the length of the Bowden cable between the servo motor and the wastegate can be verified or adjusted.

Fig. 76-1

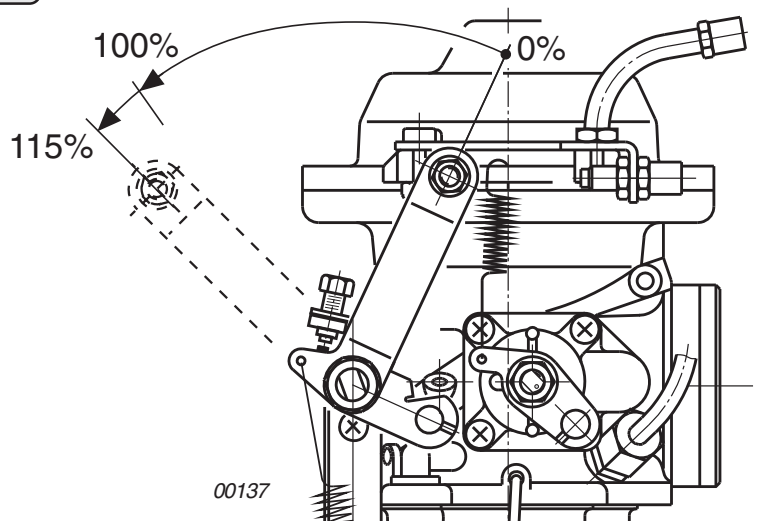

d02626

The electronic regulator (4) TCU (Turbo Control Unit) is the **"central processing unit"** as the junction of all engine parameter inputs. For functioning of the TCU, the following sensors e.g. trigger coils are required.

- **Airbox pressure sensor** (5)
  provides the actual boost pressure in the airbox
- **Ambient pressure sensor** (6)
  conveys the prevailing ambient pressure
- **Throttle valve position sensor** (7)
  supplies actual position of carburetor throttle valve.

◆ NOTE: The target boost pressure is determined from the inputs of the sensors (5) - (7).

- **Position of the wastegate**
  supplied indirectly from position of servo motor
- **Rev counter signal** (8)
  transmits the actual engine speed via the 5th sensors on the ignition housing
- **Airbox temperature sensor** (9)
  conveys the prevailing intake air temperature in the airbox

All the sensors are connected with the TCU via a common wiring harness (10). In addition to the voltage supply (11) for the TCU, the following connections are provided on the wiring harness:

- plug connections (12), each for one warning and one boost lamp
- plug connection (13) for the three-way solenoid valve
- 2 wires for an additional electronic rev counter (14)
- PC interface (15) for reading the TCU data via computer.

d02626

The following diagram shows the pressure regulating sequence for the newer TCU versions (TCU No. 966741 or higher) (Fig. 76-2).

Fig. 76-2

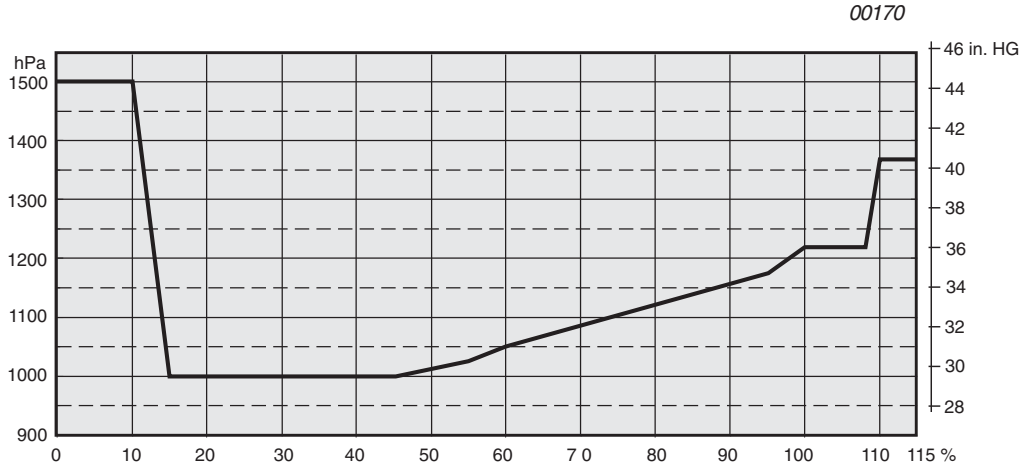

The airbox target pressures for engine operation with newer TCU versions:

Fig. 76-3

00952

engine performance	throttle potentiometer	Airbox-nominal pressure
idle	~ 0 %	1500 hPa (44,3 in. HG)
continuous output	100 - 108 %	1220 hPa (36,0 in. HG)
take-off performance	110 - 115 %	1370 hPa (40,5 in.HG)

The following diagram (Fig. 76-4) illustrates the relationship between the throttle valve position and the nominal airbox pressure for older TCU versions (TCU part no. 966470 - 966473).

Fig. 76-4

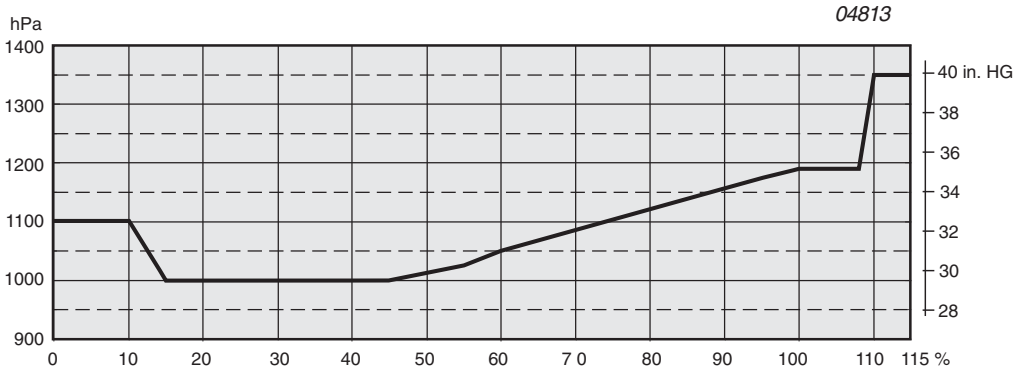

d02626

■ CAUTION: Prolonged engine operation is not allowed between max. continuous performance (100 %) and take-off performance (115 %). The target pressure rises rapidly between these throttle positions (108 to 110 %) and attempts should not be made to remain in this phase but instead to move speedily through this range in both directions to prevent control fluctuations.

This range must be passed swiftly in both directions to avoid problems such as pressure fluctuations.

◆ NOTE: In the course of model refinement, some parameters have been changed slightly. Diagram and table show the presently valid state of software.

d02626

Fig. 76-5

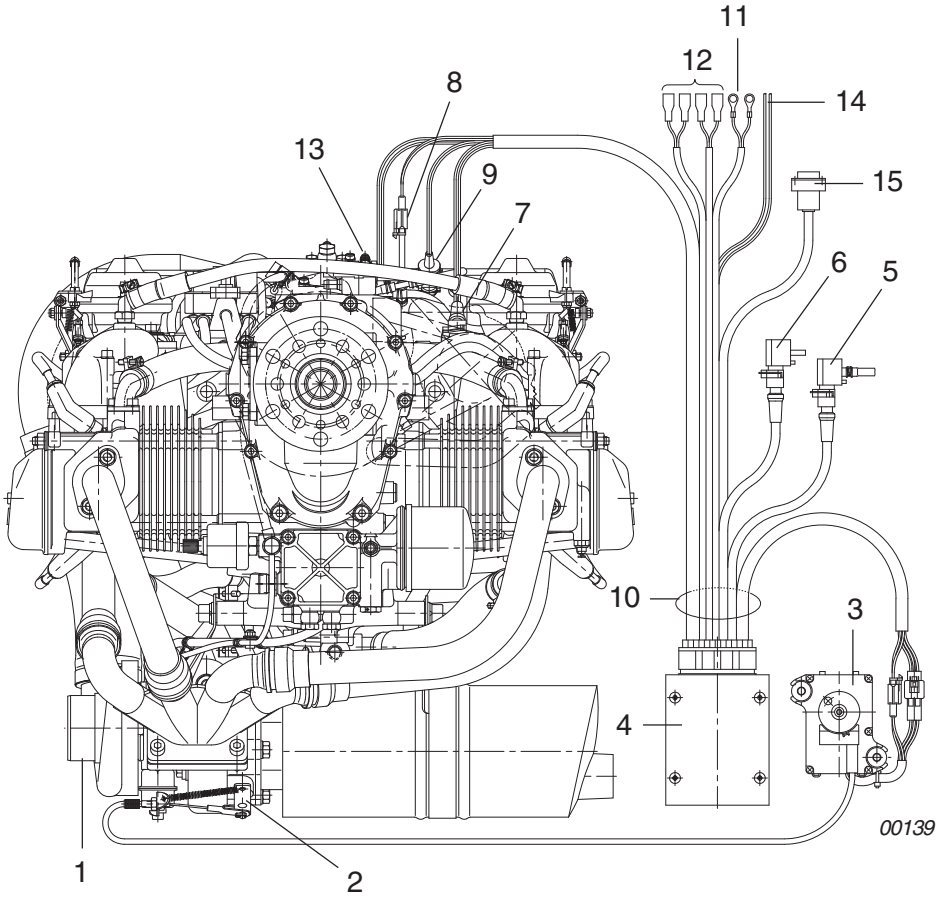

(1) Turbocharger
(2) wastegate
(3) Servo motor
(4) TCU
(5) Ambient pressure sensor
(6) Airbox pressure sensor
(7) Throttle potentiometer
(8) to the rev pickup
(9) Resistance thermometer, Airbox temp.
(10) Wiring harness
(11) Voltage supply
(12) Lamps
(13) Three-way solenoid valve
(14) external rev counter (to tach)
(15) Rs232 interface

d02626

2.1.2) Target pressure reduction

Provision for target pressure reduction is made depending on various effects as a protective measure against overstressing the engine.

2.1.2.1) Target pressure reduction at overspeeding

See Fig. 76-6

It is the responsibility of the pilot to prevent engine speeds in excess of 5800 rpm, and during fast flight and descent when using a fixed pitch propeller, the pilot must therefore reduce the engine performance.

Only if the pilot fails to do this will the TCU lower the target pressure when engine speed exceeds 5900 rpm and open the wastegate, thus reducing boost pressure. See relevant diagram.

■ CAUTION: The automatic opening of the wastegate by the TCU is an emergency measure in the event of a pilot error, but does not release the pilot from responsibility to reduce the engine performance.

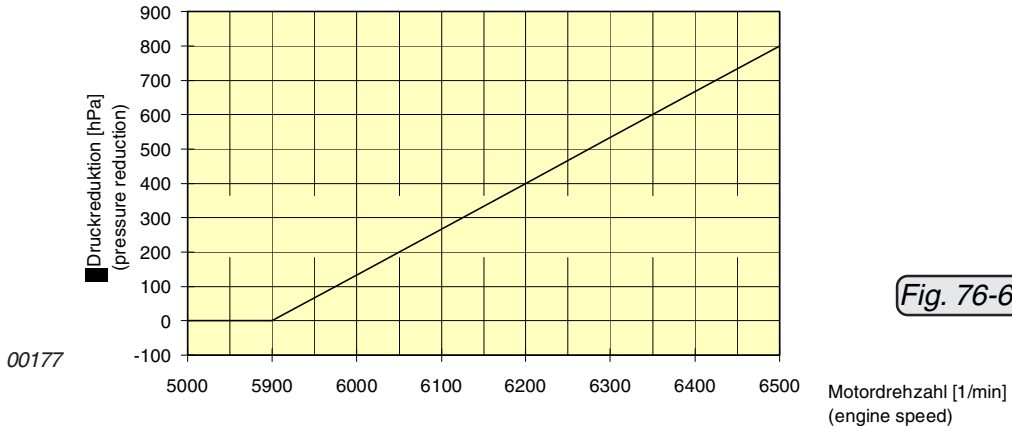

Fig. 76-6

e.g. at take-off performance (throttle valve position 115 %)

- **target pressure** 1370 hPa (without limitation)
- at an engine speed of 6100 rpm - **target pressure reduction** by approx. 265 hPa (according to diagram).
- current target pressure 1105 hPa - corresponds to 70 kW **power** instead of 84.5 kW**.**

d02626

2.1.2.2) Target pressure reduction at excessive airbox temperature

See Figs. 76-7 and 76-8.

During the compression process in the turbocharger, the intake air is heated. To reduce the risk of detonation at high boost pressure with high intake air temperature, lowering of the target pressure starts at 88 °C (190 °F) airbox temperature, see diagram (Fig. 76-7).

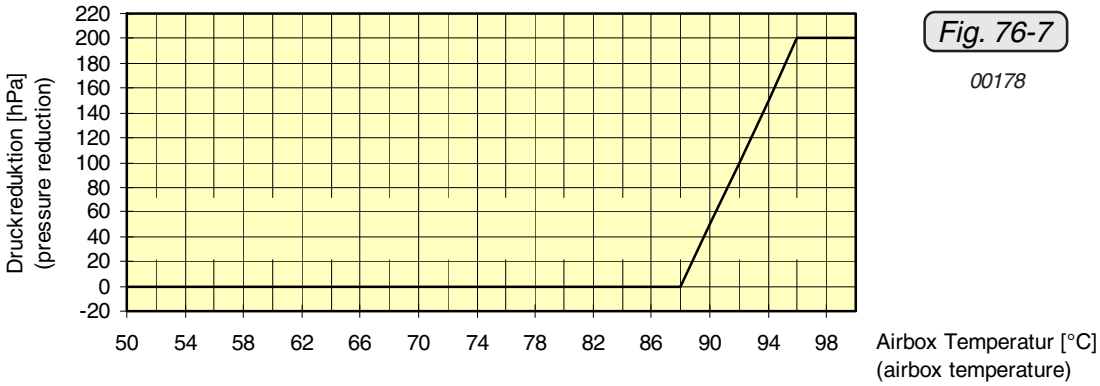

Fig. 76-7

00178

Target pressure reduction will result in a drop in maximum performance e.g. the power drop can reach up to 10 kW at 80 °C (176 °F) airbox temperature.

◆ NOTE: On TCU part no. 966470 to 966473, the airbox target pressure reduction starts at 72 °C (162 °F). See Fig. 76-8.

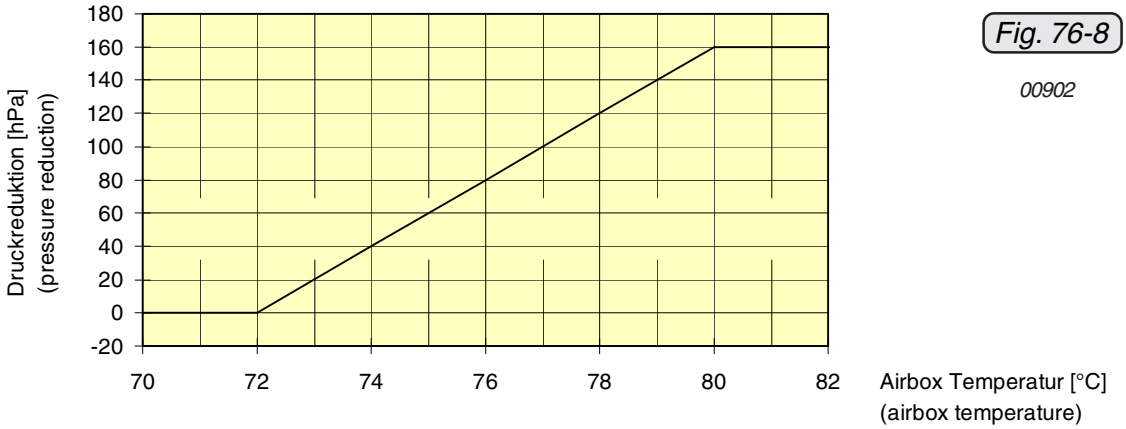

Fig. 76-8

00902

d02626

2.1.2.3) Target pressure reduction by limiting the compressor pressure ratio

To prevent vibration resonance, the max. turbo charger speed of approx. 165 000 rpm must not be exceeded. Since the turbo charger speed can be deduced exactly enough from the pressure ratio, this ratio is limited to max. 2.6.

Example: e.g. at density altitude of 5500 m

ambient pressure approx. 500 hPa

max. permitted airbox pressure (regarding deactivation) 500 x 2.6 = **1300 hPa**

i.e. no reduction of the target pressure, since this boost pressure cannot be reached at all at this altitude.

Explanation:

The critical flying altitude for max. continuous power is reached at 4500 m. Because of the low density at this altitude, the actual boost pressure is only approx. 1140 hPa, although the wastegate is completely closed.

Deactivation would not start until airbox pressure of 1300 hPa is reached.

◆ NOTE: Deactivation happens very rarely and only under certain climatic conditions and at certain altitudes.

d02626

2.1.3) Lamp output connections on the TCU

The TCU is furnished with output connections for an external **„red“** boost lamp and an **„orange“** caution lamp.

When the TCU is switched on, the two lamps are automatically subjected to a function test. Both lamps light up for 1 to 2 seconds and then go out.

Orange caution lamp:

All sensor inputs are monitored by the TCU via this caution lamp.

When the lamp goes out, this indicates that the TCU is ready for operation. A lamp which flashes continuously indicates a malfunction of the TCU or its periphery.

In the event of a malfunction, for instance if a circuit is interrupted, the TCU switches over to pre-programmed default values to ensure engine operation.

■ CAUTION : While the default values are effective, monitoring of the respective channel e.g. overspeeding, is not possible. The monitoring function is **inactive.**

Red boost lamp:

- Exceeding the admissible boost pressure will activate the red boost lamp, and it will light up continuously until boost pressure falls below the threshold.

  Threshold..... 1550 hPa (actual boost pressure)

- The TCU registers the time of full engine operation with boost pressure. Full throttle operation for longer than 5 minutes will cause the red warning lamp to flash.

■ CAUTION : The red boost lamp helps the pilot to avoid full power operation with too high boost pressure for longer than 5 minutes as otherwise the engine would be thermally overstressed.

◆ NOTE: The time observation starts at actual boost pressure of 1250 hPa. After 5 minutes the warning is issued via the boost lamp.

The warning is deactivated again as soon as the boost pressure falls below 1250 hPa. If the pressure limit is exceeded again, for example after 30 seconds, the boost lamp lights up again.

d02626

2.1.4) Three-way solenoid valve 3

The TCU also controls the 3-way solenoid valve, which causes various pressures to become active on the float chamber of the carburetors. For further information, see 73-00-00 sec. 2.8.

◆ NOTE: The solenoid valve is inactive below the threshold.

2.1.5) PC interface

The TCU incorporates a serial interface. By using a specially developed program, all input and exit signals of the TCU can by monitored, checked and if necessary recorded.

This program allows quick and efficient error diagnostics without having to dismantle the complete control unit.

This program can monitor and record the operation of many elements, including the 2 pressure sensors, temperature sensors, rev pickup, throttle valve and wastegate position.

◆ NOTE: This system works "**real time**" i.e. if necessary also during engine operation.

It allows the engineering staff to check and record TCU data during flight.

These recordings can then be evaluated on a graph and facilitate troubleshooting.
In addition, these recordings can be used as documentation for engine repair and overhaul.

◆ NOTE: This communication program is not included in the delivery range of the engine, but is readily available as a spare part from the respective dealer.

d02626

3) Maintenance

The following sections describe maintenance procedure for engines of the 912/914 Series above and beyond the maintenance and special checks, see corresponding Maintenance Manual (Line Maintenance) for the respective engine type, 912 Series or 914 Series, and the systems descriptions given hitherto. The description is subdivided into subsections and descriptions of the function of the various systems.

3.1) Control system of the turbocharger (only on 914 Series)

3.1.1) Checking the turbocharger control unit (TCU) by means of a communication program

3.1.1.1) Functions of the communication program

For trouble-free engine operation, the pilot must be able to locate the exact throttle position for the max. continuous performance.

- function test of all sensors
- checking the throttle potentiometer (throttle position, throttle valve position)

  on-line data recording of the turbocharger control
- quick fault analysis

This program allows prompt analysis of defects and irregularities in the TCU components.

3.1.1.2) Required items

See Fig. 76-9.

- PC with processor 80 286 or higher, with
  main frame memory min. 640 KB RAM
  graphic adapter EGA, CGA or VGA
  serial interface COM 1 or COM 2
  operating system MS-DOS 5.0 or higher
  disk drive 3.5 inch

◆ NOTE: We recommend a laptop or notebook computer, since these units can also be used directly on the engine or aircraft.

d02626

- Communication program:
  Software between TCU and computer
  tlr V4.3a for TCU part no. 966470 and 966471
  tlr V4.5a for TCU part no. 966472 and 966473
  tlr V4.6a for TCU part no. 966741
- Decoding unit (Dongle) with data cable to connect with computer

◆ NOTE: The Dongle is only required for the TCU part no. 966470 to 966473. On the TCU part no. 966741, the computer must be connected directly to the RS 232 plug connection, the 9-pin port of the wiring harness.

◆ NOTE: All the required components, except the computer, are available in the form of a monitoring set (1) or as a floppy disk (2).

Fig. 76-9

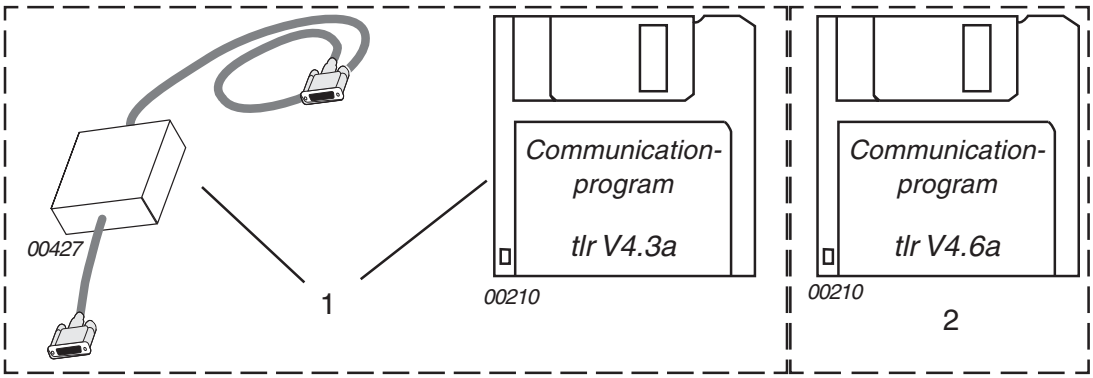

d02626

3.1.1.3) Scope of the communication program

a) Software

- The software is the property of BRP-Rotax. Duplication is only permissible for the purpose of copying onto the hard disk or for the creation of backup copies or for filing.

b) Necessary connections

See Figs. 76-10 and 76-11.

- On the TCU part no. 966470 to 966473, the decoding unit (Dongle) must be connected to the RS 232 plug connection, the 9-pin port of the wiring harness.

On the TCU part no. 966741 connect the computer direct on the RS 232 the 9-pin port of the wiring harness.

- Connect the data cable of the decoding unit (Dongle), respectively the wiring harness, with the **COM1** interface of computer (COM1 or COM2).

◆ NOTE: The computer is normally provided with two serial interfaces (1) and (2).

Normally a serial interface (usually a 9-pin port) is used for connection of a mouse.

Since there is no need for a mouse to control the communication program, the Dongle can be connected with the interface for the mouse, best known as COM 1.

◆ NOTE: On the TCU part no. 966741, there is no decoding unit and the connection is direct.

Fig. 76-10

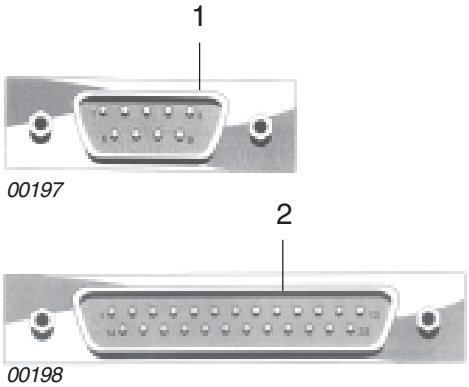

d02626

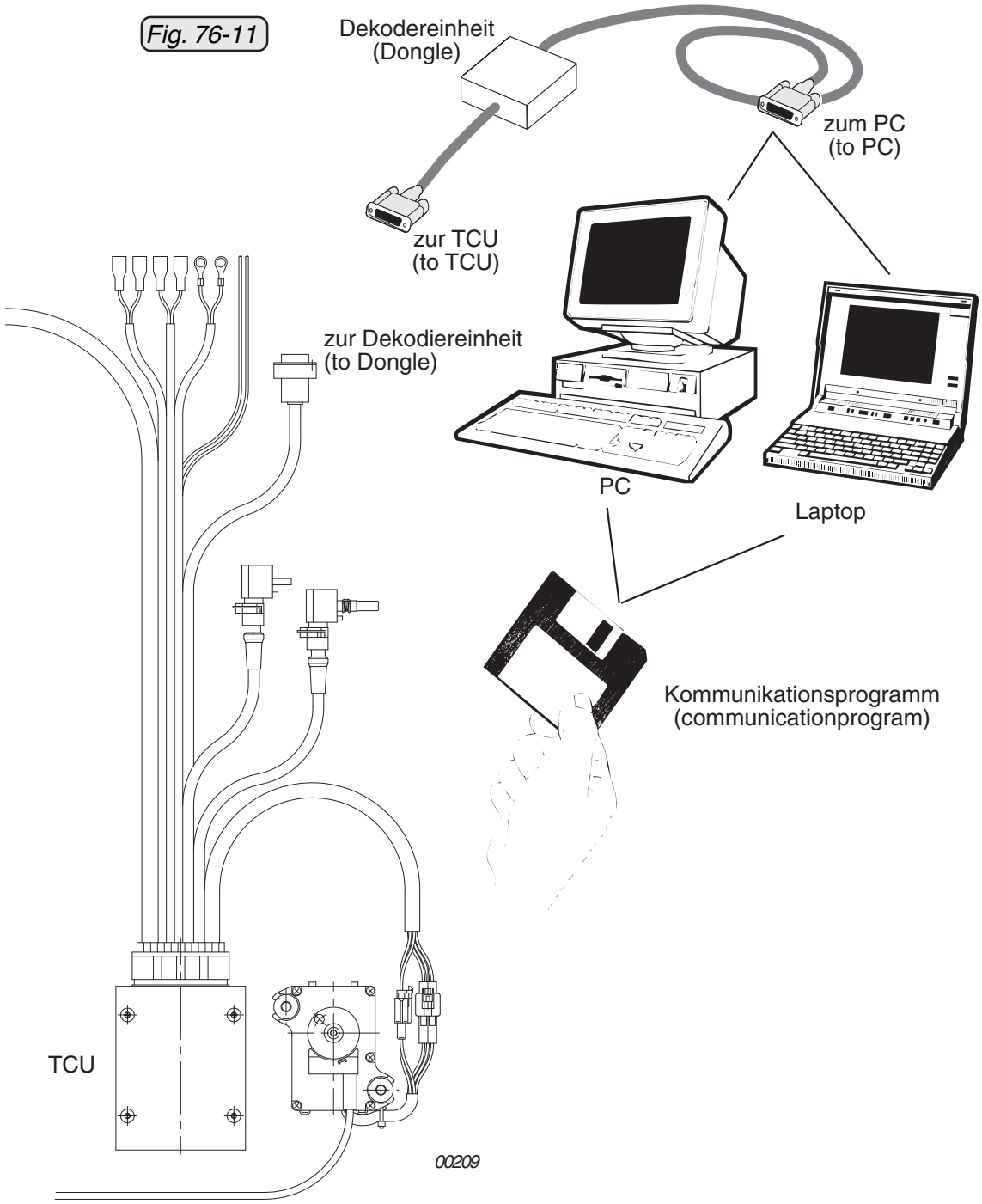
Fig. 76-11
Dekodereinheit
(Dongle)
zum PC
(to PC)
zur TCU
(to TCU)
zur Dekodiereinheit
(to Dongle)
PC
Laptop
Kommunikationsprogramm
(communicationprogram)
TCU
00209

d02626

c) Procedure for installation of the communication program on the PC

- Check which TCU part no. and thus which program version is applicable.

TCU part no.	Program version
966470	TLR43A.exe
966471	TLR45A.exe
966472	TLR45A.exe
966473	TLR45A.exe
966741	TLR46A.exe

08220

Insert the floppy disk into the disk drive and copy the corresponding communication program onto the hard disk.

◆ NOTE: Copy the communication program into a directory with a corresponding name.

3.1.1.4) Application of the communication program

a) Start of the program:

- Establish connections PC - dongle (for TCU part no. 966470)

  or directly with

  the RS232 plug connection (for TCU part no. 966741) - TCU
- switch on TCU

▲ WARNING: Ensure engine ignition “OFF” and secured against unintentional “ON”.

switch on PC (if not active already)

- start the program by double-clicking on the program symbol.

◆ NOTE: The first time the program is started, it will ask for the graphic adapter and the interface.

Normally, “V“ is entered for VGA and “1“ for COM1. After entering these parameters, the configuration file TLR.cfg will be created and stored in the communication program.

d02626

◆ NOTE: If the wrong interface is entered, this file can be deleted and the program start repeated.

b) Starting the subprograms:

See Fig. 76-12

The subprograms are listed in the bottom line and are started by keying in first letter of the program name, e.g. **"M"** for MONITOR (monitor program)

◆ NOTE: The key "ESC" will always return you to the main menu.

Fig. 76-12

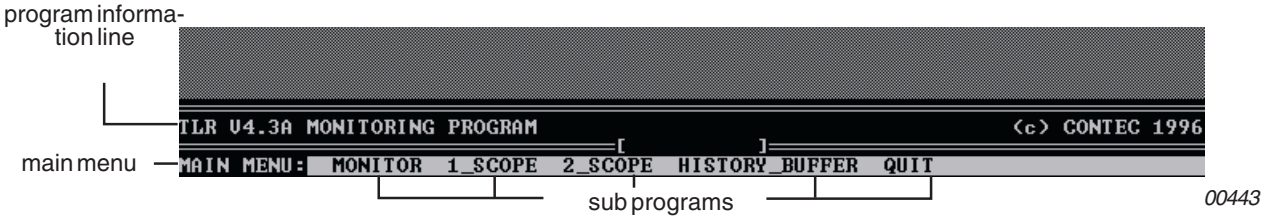

◆ NOTE: Fig. 76 -12 shows the program version TLR V4.3A.

c) Description of the sub programs

- On-line-display:

See Figs. 76-13, 76-14, 76-15, 76-16, 76-17 and 76-18.

◆ NOTE: If when starting the on-line sub programs (MONITOR, 1_SCOPE and 2_SCOPE) the failure message

"/ERROR: Serial I/O Continue with any key..."

appears in the last line (1), a connection between TCU and computer has been interrupted. Checking of all plug connections between TCU and computer is necessary. In addition, verify voltage supply to TCU.

Rectify any detected interruption between TCU and computer and switch TCU voltage supply "OFF" and "ON".

Fig. 76-13

NOTES

d02626

Fig. 76-14

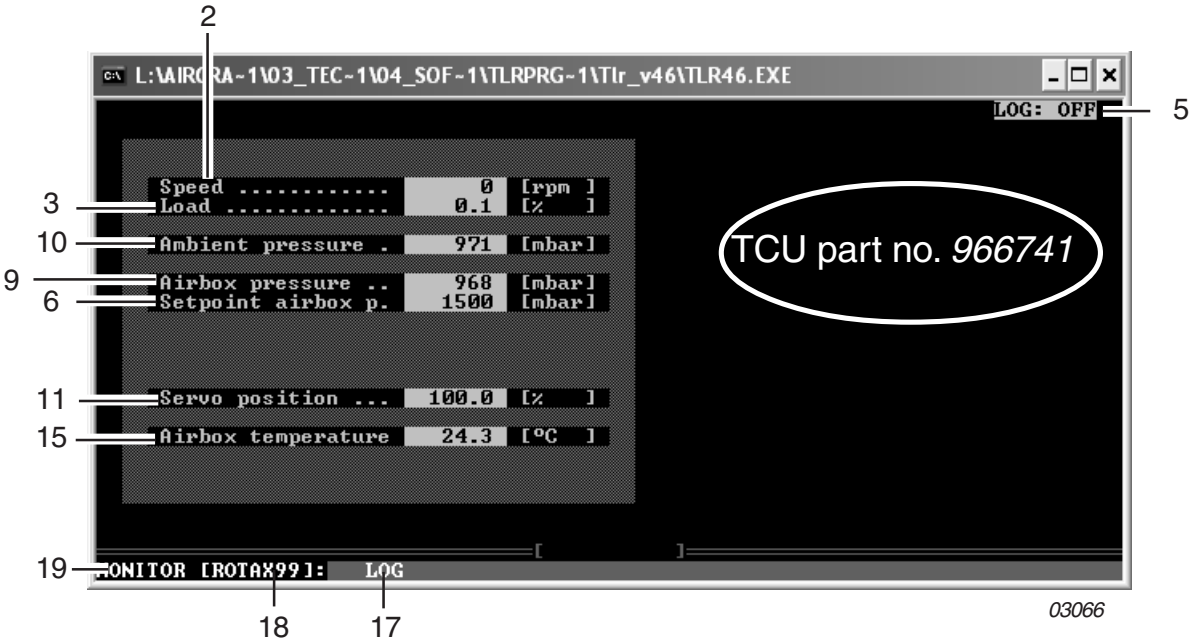

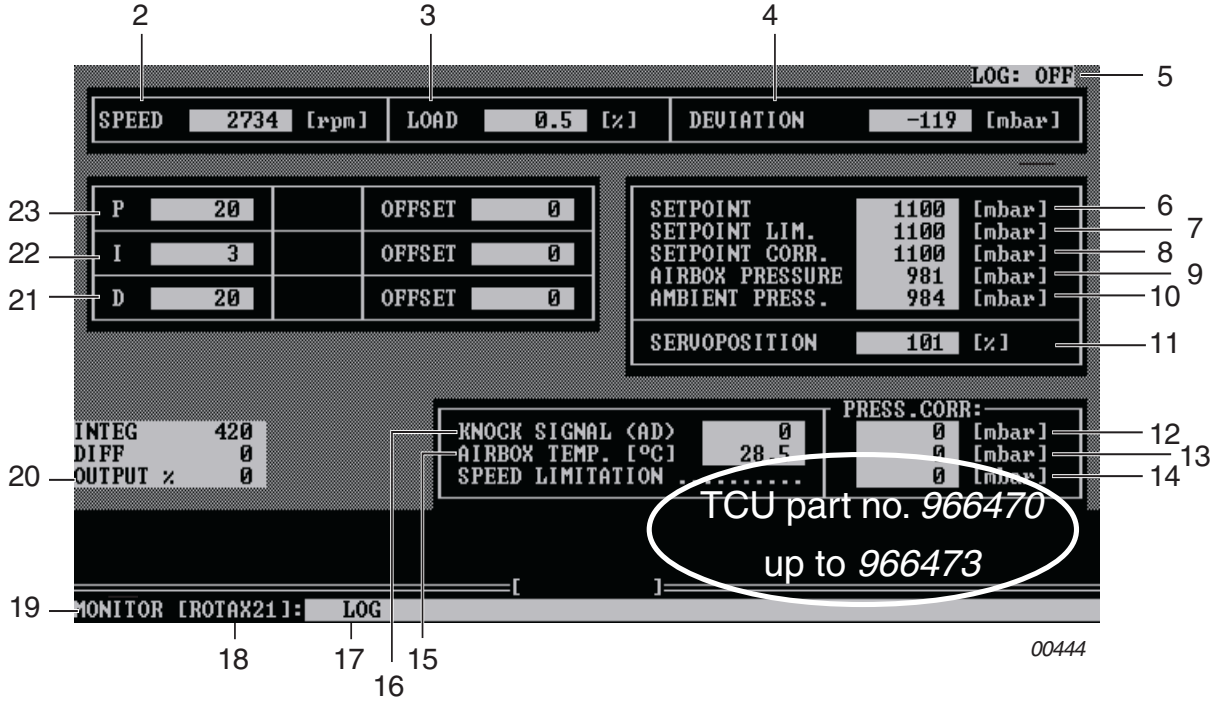

d02626

Legend to monitor display

(2) **Rev counter display**

(3) **Throttle valve position**

(4) Pressure difference between (8) and (9)

(5) LOG status ON/OFF

(6) Target pressure on basis of throttle valve position

(7) Target pressure on basis of pressure ratio between (9) and (10)

(8) effective target pressure input
(possibly reduced, e.g. by overspeeding, airbox temperature or too high pressure ratio)

(9) **Airbox pressure**

(10) **Ambient pressure**

(11) Servo position

(12) not activated

(13) Target pressure reduction by exceeding of the max. airbox temperature

(14) Target pressure reduction by exceeding max. engine speed

(15) **Airbox temperature**

(16) Knocking signal (not activated)

(17) LOG actuation ON/OFF

(18) Software status

(19) Program identification

(20) Servo output %

(21) D factor

(22) I factor

(23) P factor

d02626

◆ NOTE: Because of the multitude of displays, parameters important for the user are printed in bold type and underlined.

MONITOR: Serves for the on-line display of operational engine data such as airbox pressure, ambient pressure, servo position, airbox temperature etc.

LOG: Is a submenu (18) of the MONITOR program and facilitates recording of current operational data on the hard disk of the connected PC.

Logging is activated and stopped by pressing the key **L**. The logging status is indicated by “ON” for on-line recording and “OFF” respectively for non-recording (see Fig. 76-14, item (5)).

A so-called Log file will be loaded onto the **hard disk** stating date and starting time of the recording.

Example:

Fig. 76-15

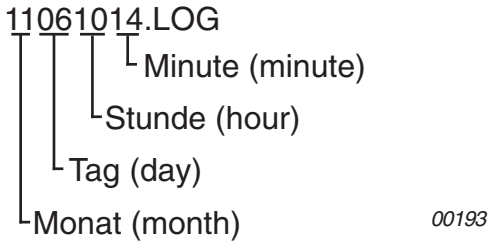

◆ NOTE: Verify this date and starting time when booting the PC.

If more than 4000 data lines are recorded, the current LOG file will be closed automatically and a new one opened.

d02626

Subsequent to recording, the data can be stored on a diskette or printed for evaluation.

The created LOG-files are text files which can be used for further data editing in text and table calculation programs.

Fig. 76-16, for instance, shows usage of data on an EXCEL spreadsheet.

d02626

time PC (hh:mm:ss)	speed (1/min)	load throttle (0-115%)	pressure difference (mbar)	nominal pressure (mbar)	actual pressure (mbar)	ambient pressure (mbar)	servo position (0 - 100 zu)	knocking	airbox (°C)	P-factor	I-factor	D-factor	output servo (+/-100)
16:53:01	2388	3,3	-123	1100	977	978	100	500	27,6	20	3	80	0
16:53:01	2384	3,3	-123	1100	977	978	100	495	27,6	20	3	80	0
16:53:02	2386	3,3	-123	1100	977	978	100	495	27,6	20	3	80	0
16:53:02	2369	3,3	-122	1100	978	978	100	528	27,6	20	3	80	0
16:53:02	2387	3,3	-122	1100	978	978	100	526	27,6	20	3	80	0
16:53:02	2388	3,3	-122	1100	977	978	100	526	27,6	20	3	100	0
16:53:02	2387	3,3	-123	1100	977	978	100	521	27,6	20	3	80	0
16:53:03	2377	3,3	-123	1100	977	978	100	522	27,6	20	3	80	0
16:53:03	2375	3,3	-122	1100	978	978	100	516	27,6	20	3	80	0
16:53:03	2376	3,3	-122	1100	978	978	100	518	27,6	20	3	80	0
16:53:03	2385	3,3	-122	1100	978	978	100	521	27,6	20	3	80	0
16:53:03	2375	3,3	-123	1100	977	978	100	517	27,6	20	3	80	0
16:53:03	2369	3,3	-123	1100	977	978	100	516	27,6	20	3	80	0
16:53:04	2386	3,3	-123	1100	977	978	100	497	27,6	20	3	80	0
16:53:04	2391	3,3	-123	1100	978	978	100	497	27,6	20	3	80	0
16:53:04	2386	3,3	-122	1100	978	978	100	530	27,6	20	3	80	0
16:53:04	2394	3,3	-123	1100	977	978	100	524	27,6	20	3	80	0
16:53:04	2371	3,3	-123	1100	977	978	100	523	27,6	20	3	80	0
16:53:05	2373	3,3	-123	1100	977	978	100	521	27,6	20	3	80	0
16:53:05	2368	3,3	-122	1100	978	978	100	520	27,6	20	3	80	0
16:53:05	2396	3,3	-122	1100	978	978	100	517	27,6	20	3	80	0
16:53:05	2384	3,3	-122	1100	978	978	100	516	27,6	20	3	80	0
16:53:05	2384	3,3	-123	1100	977	978	100	510	27,6	20	3	80	0
16:53:05	2386	3,3	-123	1100	977	978	100	511	27,6	20	3	80	0
16:53:06	2387	3,3	-122	1100	978	978	100	527	27,6	20	3	80	0
16:53:06	2384	3,3	-122	1100	978	978	100	504	27,6	20	3	80	0
16:53:06	2391	3,3	-123	1100	977	978	100	523	27,6	20	3	80	0
16:53:06	2380	3,3	-123	1100	977	978	100	518	27,6	20	3	80	0
16:53:06	2391	3,3	-123	1100	977	978	100	517	27,6	20	3	80	0
16:53:06	2373	3,3	-122	1100	978	978	100	513	27,6	20	3	80	0
16:53:07	2376	3,3	-123	1100	977	978	100	512	27,6	20	3	80	0
16:53:07	2392	3,3	-123	1100	977	978	100	533	27,6	20	3	80	0
16:53:07	2372	3,3	-122	1100	978	978	100	524	27,6	20	3	80	0
16:53:07	2371	3,3	-122	1100	978	978	100	502	27,6	20	3	80	0
16:53:08	2365	3,3	-122	1100	978	978	100	501	27,6	20	3	80	0
16:53:08	2368	3,3	-123	1100	977	978	100	520	27,6	20	3	80	0
16:53:08	2369	3,3	-123	1100	977	978	100	520	27,6	20	3	80	0
16:53:08	2362	3,3	-123	1100	978	978	100	503	27,6	20	3	80	0
16:53:08	2382	3,3	-122	1100	978	978	100	502	27,6	20	3	80	0

00475

For above numbering see also monitor display.

Fig. 76-16

◆ NOTE: Fig. 76-16 shows an EXCEL spreadsheet of program version TLR V4.3A.

1_SCOPE: For on-line display of the control action with regard to pressure deviation (airbox pressure to target pressure) in the range of ±100 hPa (mPa).

The program is for graphic evaluation of the parameters (8) and (9) in the monitor program.

d02626

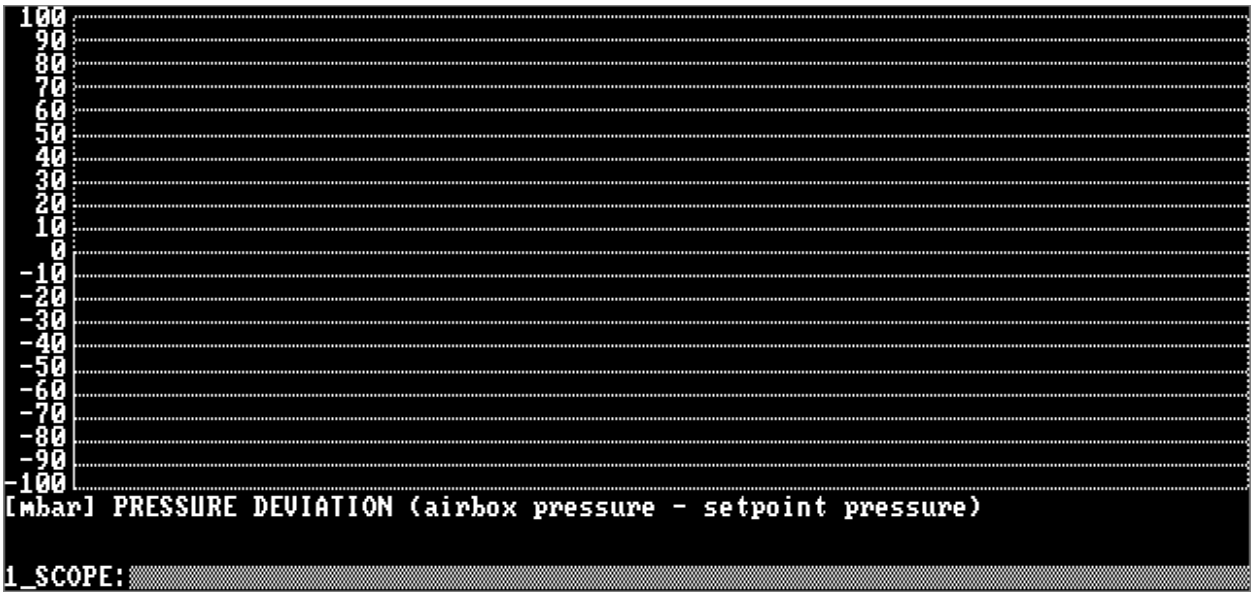

Fig. 76-17

00194

2_SCOPE: For on-line display of the control action between target pressure and effective airbox pressure in the range of 1000 to 1400 hPa (mbar).

The program is for graphic evaluation of the parameters (8) and (9) in the monitor program.

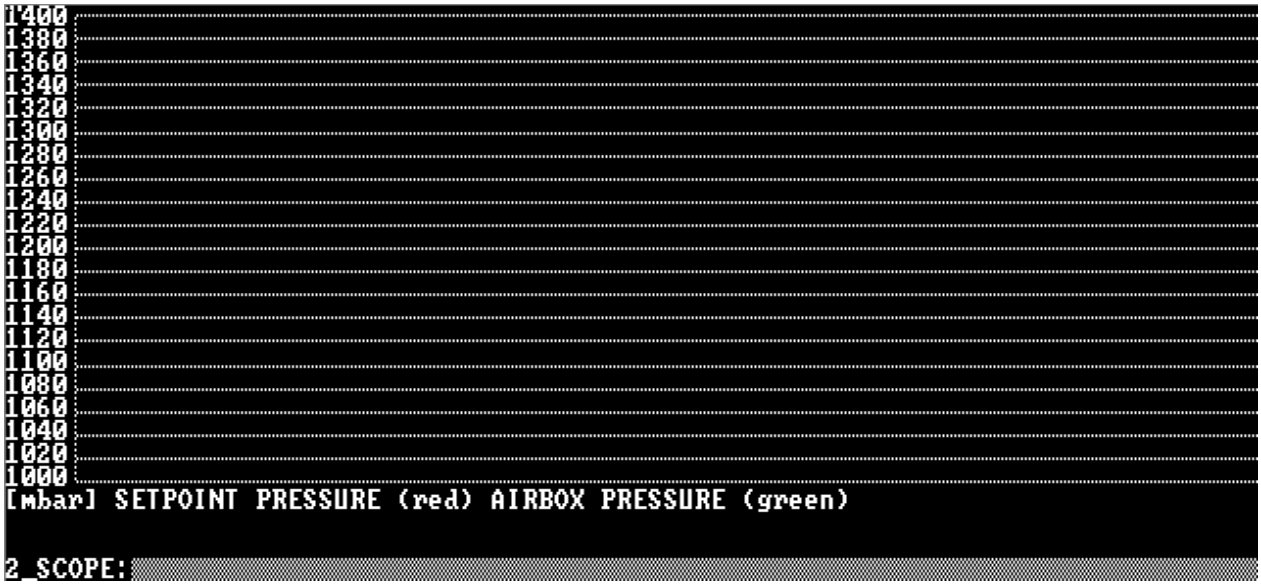

d02626

Fig. 76-18

00195

- Data display

See Figs. 76-19, 76-20, 76-21, 76, -22 and 76-23.

HISTORY_BUFFER: A subprogram for reading, displaying and printing of the data stored in the TCU. Fig. 76-21 shows that 8 control parameters are displayed. The recording takes place at 6 minute intervals, whereby the highest value of each period will be stored.

00199

Fig. 76-19

READ_DATA: Reads data such as serial number, time of operation and the latest transmitted engine data from the storage in the TCU. When 100 % is reached, the reading is complete.

◆ NOTE: If this command is carried out during creation of a LOG file, the failure message "SERIAL ACCESS DENIED" will appear. In this case, repeat the reading procedure.

00200

Fig. 76-20

d02626

VIEW_DATA: Shows the file data deduced from READ_DATA on the screen. The keys “page up” and “page down” enable paging on the screen.

```
TLR                                          BOMBARDIER-ROTAX/conTec
Serial Number        :     500
Hours of Operation   :     564.1

----------------------- Intervall Memory -----------------------

  Channel   Input                    Unit/Range

   1        SPEED                    [Rpm]
   2        LOAD (Throttle-Pos.)     [%]
   3        AIR_PRESSURE             [mbar]
   4        AIRBOX_PRESSURE          [mbar]
   5        AIRBOX_TEMPERATURE       [°C]
   6        SERVO_POSITION           [%]
   7        KNOCK_A/D_VALUE          [0..1023]
   8        BOOST_TIME               [s]

 Mode/Time[h]/Ch.    1     2     3     4     5     6     7     8

 0    564.0          0     0   985  1249    28    -1     0     0

VIEW:                                          <cursor/page-up/down>
```

00201

Fig. 76-21

PRINT_DATA: Option to print data deduced from READ_DATA.

```
TLR                                          BOMBARDIER-ROTAX/conTec
Serial Number        :     500
Hours of Operation   :     564.1

----------------------- Intervall Memory -----------------------

  Channel   Input                    Unit/Range

   1        SPEED                    [Rpm]
   2        LOAD (Throttle-Pos.)     [%]
   3        AIR_PRESSURE             [mbar]
   4        AIRBOX_PRESSURE          [mbar]
   5        AIRBOX_TEMPERATURE       [°C]
   6        SERVO_POSITION           [%]
   7        KNOCK_A/D_VALUE          [0..1023]
   8        BOOST_TIME               [s]

 Mode/Time[h]/Ch.    1     2     3     4     5     6     7     8

 0    564.0          0     0   985  1249    28    -1     0     0
```

00205

Fig. 76-22

d02626

◆ NOTE: Figs. 76-21 and 76-22 show program version TLR V4.3A.

◆ NOTE: The printer must be connected with the PC via the parallel interface (1).

Fig. 76-23

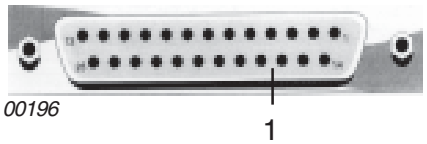

d) End of program

- Stop communication program with "**Q**" for QUIT
- **Turn off the TCU**
- **Disconnect (store dongle properly)**
- **Switch off PC**

3.1.1.5) Checking the components of the turbocharger control

The communication program allows quick detection of shortcomings of the components via the sub program „MONITOR".

◆ NOTE: A corresponding trouble shooting chart is available on request from authorized distributors and service centers. See latest Operators Manual for the respective engine type or the official Homepage **www.rotax-aircraft-engines.com.**

d02626

3.1.1.6) Checking the throttle valve position

See Figs. 76-24 and 76-25.

- Start-up of the subprogram MONITOR.

At the top in the center (1) is the position display for the throttle valve (carburetor 2/4)

Fig. 76-25

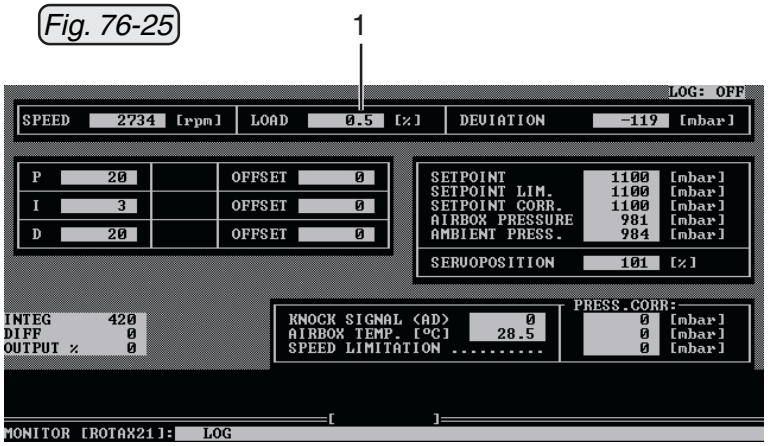

Program version TLR V4.3A 00445

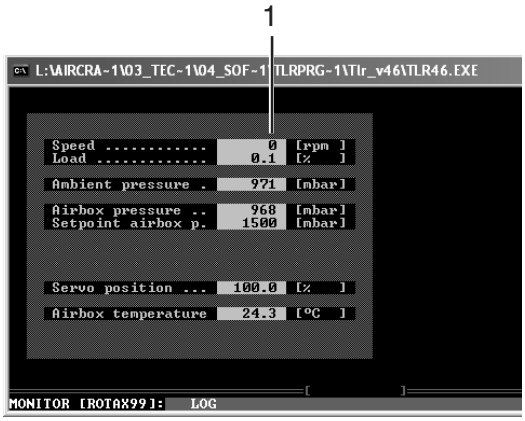

Program version TLR V4.6A 03066

0 %	**throttle valve completely closed**
115 %	**throttle valve completely open**

- Visually check whether both throttle valves can be fully opened and closed. If necessary, correct the installation/ setting.
- Check the display with throttle valve completely closed:

  nominal: 0° **max. deviation +3%**
- Check the display with throttle valve completely open:

  nominal: 115 % **max. deviation -2%**

■ CAUTION: Check whether indication is **linear over the complete range** from 0% to 115% i.e. the 115% position is not indicated before throttle valve is fully open.

Fig. 76-25

00214

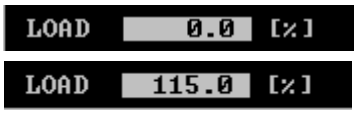

00215

d02626

- Check the display at max. continuous performance.

■ CAUTION: Throttle lever must be in positive stop position.

nominal: 100 % max. deviation +3%.

▲ WARNING: This check of position is only meaningful and permissible if idle- and full throttle-position are within the permissible tolerances.

If the throttle position for idle and full throttle are not within the permissible tolerances or if not proceeding linearly, then a new calibration of the throttle position is absolutely necessary.

Recalibration to be carried out only by an authorized ROTAX-Dealer or Service Center if the TCU is of part no. 966470 to 966473 .

If TCU part no. 966741 or higher is used, proceed with calibration as described in the following section.

d02626

3.1.1.7) Recalibration of the throttle position

See Figs. 76-26, 76-27 and 76-28.

- Start up of the sub program THROTTLE.
- Check whether the throttle valve (carburetor 2/4) can be fully opened and closed. Verify that the Bowden cables allow the complete travel from stop to stop.
- Follow the instructions on the display, i.e.:
- Close the throttle valve completely (carb 2/4) and confirm with ENTER.

Fig. 76-26

03072

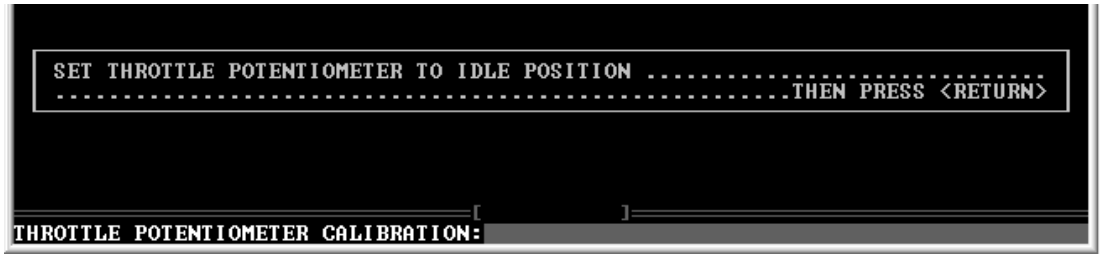

- Fully open the throttle valve (carb 2/4) and confirm with ENTER.

Fig. 76-27

03073

- Calibration data will be transferred automatically and the calibration takes place.

Fig. 76-28

03071

- Verification of the throttle position as per section 76-00-00 / 3.1.1.6 .

d02626

3.1.2) Static check of the turbocharger control

The easiest way to check function of turbocharger control components is by the communication program. If this program is not at your disposal, the following static checks can be carried out.

◆ NOTE: Visual inspection of all components.

3.1.2.1) Turbo control unit (TCU)

See Fig. 76-29

Location of installation may vary depending on aircraft model and is limited by the length of the wiring harness.

- Inspection for physical damage.
- Inspection of the 4 rubber buffers (1) for damage, which is detrimental for vibration damping.
- Inspection of the 36-pin plug receptacle (2).

▲ WARNING: The TCU must never be opened.

■ CAUTION: Replace TCU without delay in the event of physical damage or incorrect operation.

Fig. 76-29

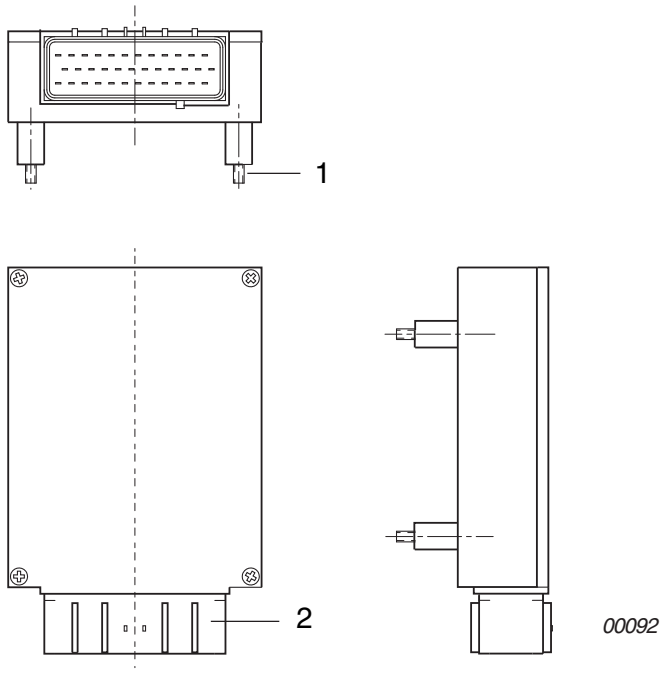

d02626

Further shortcomings can only be detected in correlation with the respective component of the turbo control unit.

■ CAUTION: The following checks are necessary if the TCU is to be replaced.

- Inspection of the throttle valve position using the communication program. See 76-00-00 sec. 3.1.

■ CAUTION: If this aid is not at your disposal, a trial run of the engine is required. **Engine operation is only allowed for transfer to the nearest maintenance facility**, where this check has to be conducted afterwards.

- Test run engine. See the corresponding Maintenance Manual (Line Maintenance) for the respective engine type, 912 Series or 914 Series.
- When switching on the TCU, observe self test of the servo motor, see 76-00-00 sec. 3.1.2.7 and the caution lamps, see 76-00-00 sec. 3.1.2.2.

▲ WARNING: If an inspection reveals irregularities, then the engine must not be taken in operation until the cause is found and rectified.

d02626

3.1.2.2) Caution lamps

See Fig. 76-30

The TCU is furnished with output terminals for an external **red** boost lamp (WARNING LAMP) and an **orange** caution lamp.

Location of the lamps depends on type of aircraft and is limited by the length of the wiring harness. Standard location is on the instrument panel in the cockpit.

When switching on the voltage supply of the TCU, the function of the two lamps is automatically tested. Both lamps light up for 1 to 2 seconds and then go out. If this does not happen, check the following:

- Inspection for physical damage.
- Check connections of wiring harness
- Check lamps for correct functioning

◆ NOTE: The two caution lamps are not included in the delivery range of the engine.

■ CAUTION: In the event of physical damage or incorrect operation, replace part without delay.

■ CAUTION: The negative poles (10, 11) must not be attached directly to the battery potential. A potentialfree 2-pin lamp socket must be used, as the lamps are triggered via the negative pole.

Fig. 76-30

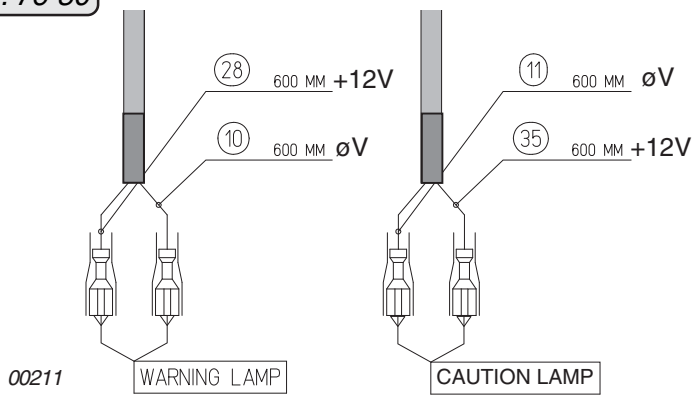

d02626

3.1.2.3) Wiring harness

See Fig. 76-31

The sensors are connected with the TCU via the wiring harness.

▲ WARNING: If an inspection reveals irregularities, then the engine must not be taken in operation until the cause is found and rectified.

The easiest way to check function of turbo control components is by the communication program. If this program is not at your disposal, the following static checks can be carried out.

- For verification and troubleshooting, check all connections for passage and physical damage. See Fig. 76-31.
- Verify that all plug connections fit tightly.

■ CAUTION: In the event of physical damage or incorrect operation, replace part without delay. Repair on your own authority is not permitted.

◆ NOTE: Fig. 76-31 contains a lot of information. Besides the wiring designations, plug allocation, cable length, the polarity of the voltage supply to the single components are also stated.

■ CAUTION: Due to a modification a three-way solenoid valve was introduced. If the engine is equipped with an old 3-way solenoid valve then, if the wiring harness needs to be replaced, the 3-way solenoid valve also has to be changed. See 76-00-00 sec. 3.1.2.9.

If the wiring harness is replaced, the throttle valve position must be recalibrated (see 76-00-00 sec. 3.1.1.7) and the turbocharger control checked in accordance with 76-00-00 sec. 4

If this aid is not at your disposal, an engine test run has to be performed. See corresponding Maintenance Manual (Line Maintenance) for the respective engine type 914 Series.

d04355

Fig. 76-31

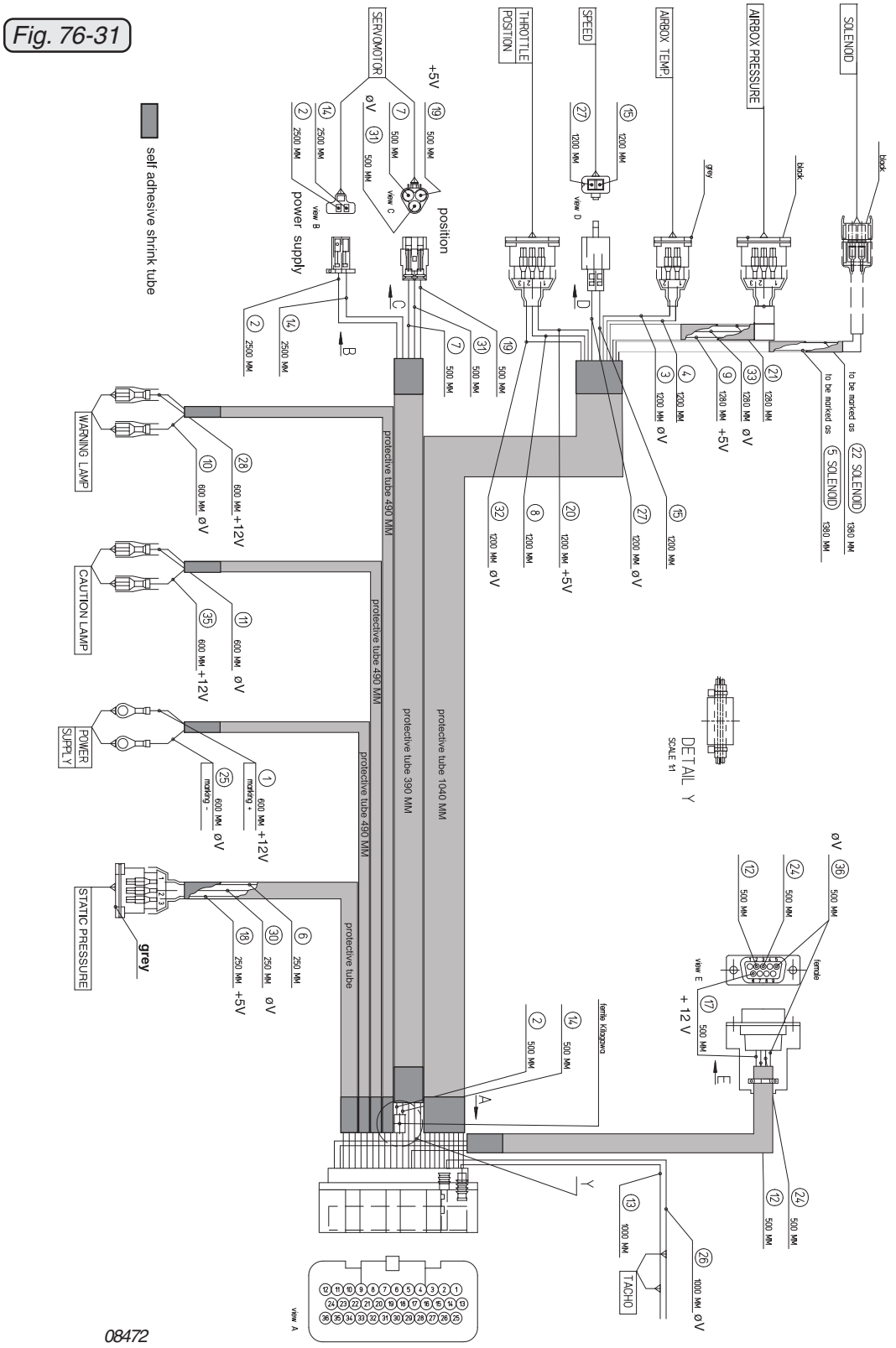
SOLENOID
AIRBOX PRESSURE
AIRBOX TEMP.
SPEED
THROTTLE POSITION
SERVOMOTOR
+5V
øV
position
power supply
view B
view C
view D
black
grey
to be marked as
22 SOLENOID
6 SOLENOID
1380 MM
1280 MM
1200 MM
500 MM
2500 MM
self adhesive shrink tube
WARNING LAMP
CAUTION LAMP
POWER SUPPLY
STATIC PRESSURE
600 MM
+12V
marking +
marking –
250 MM
protective tube 490 MM
protective tube 390 MM
protective tube 1040 MM
protective tube
DETAIL Y
SCALE 1:1
female
female Kilogrewo
view E
view A
TACHO
1000 MM
08472
d04355

3.1.2.4) Throttle potentiometer

See Figs. 76-32, 76-33, 76-34, 76-35, 76-36, 76-37, 76-38 and 76-39.

The throttle potentiometer (1) is installed on constant depression carburetor 2/4.

The turning range when installed is from 0% - 115%.

◆ NOTE: The throttle potentiometer is fitted on older and newer versions. See Figs. 76-34, 76-36 and 76-37.

See Figs. 76-37, 76-00 and 2-00.

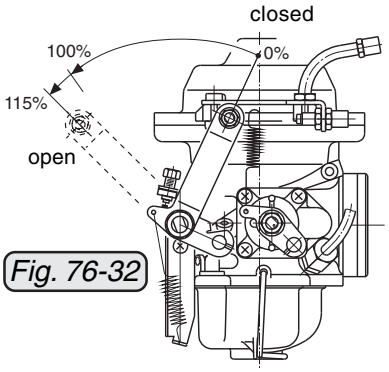

Fig. 76-32

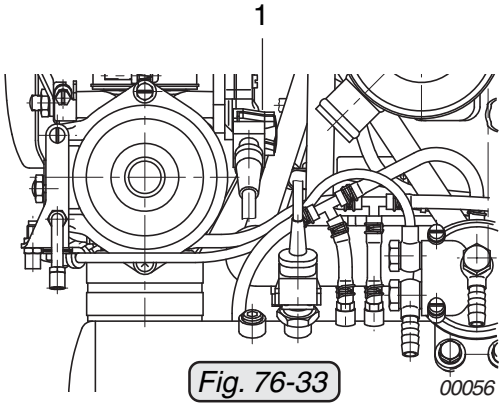

Fig. 76-33

For the following measurements, unplug connection with wiring harness but reconnect immediately after completion of the check and verify tight fit and engagement of catch.

If the throttle potentiometer was removed from the carburetor for checking, then verification of the throttle valve position via the communication program will be necessary. See 76-00-00 sec. 3.1.

If this aid is not at your disposal, an engine test run has to be performed. See the corresponding Maintenance Manual (Line Maintenance) for the respective engine type, 912 Series or 914 Series. **Engine operation is only permissible for transfer to the nearest maintenance facility**, where this check has to be performed afterwards.

d02626

When reassembling the original throttle potentiometer, it is not necessary to dismantle the adapter flange (2). This would increase the installation tolerance unnecessarily.

When replacing the throttle potentiometer, pay attention to the version used and if necessary, also remove the adapter flange.

◆ NOTE: When assembling the adapter flange, ensure that it is the appropriate model for the respective throttle potentiometer and that it is installed in the correct position (with the cut off edge upwards). See Fig. 76-34

Fig. 76-34

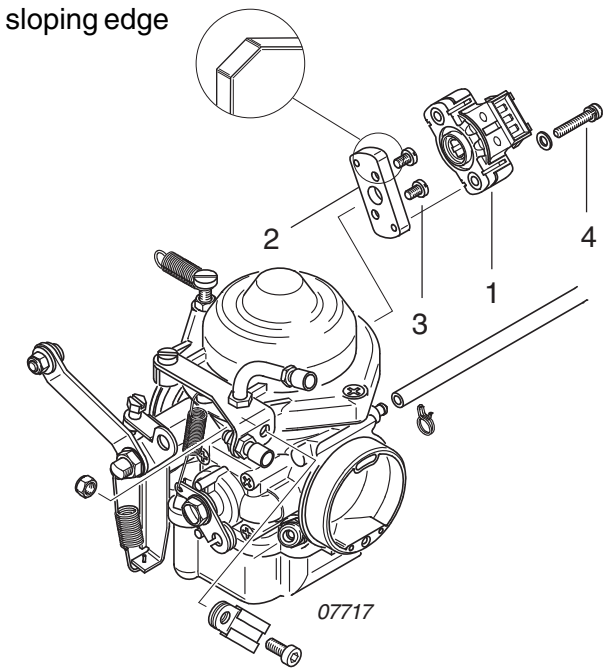

Fig. 76-35

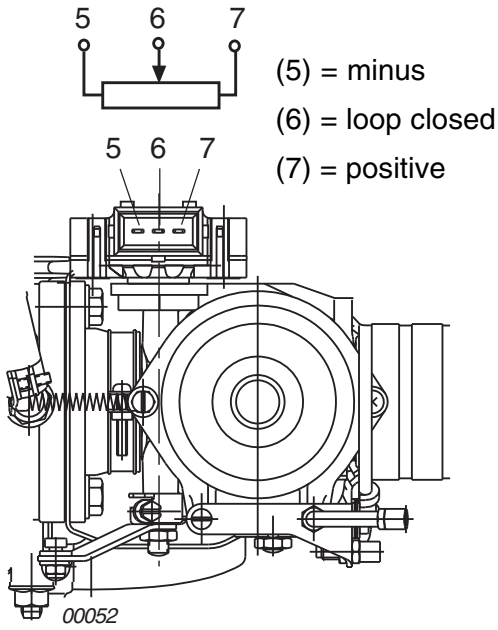

When installing the throttle potentiometer, check the version, see Figs. 76-36 and 76-37 and ensure that it engages with free movement in the flat surface of the throttle valve shaft. Secure the allen screws M4x7 (3) and the combined screws M4x22 (4) with LOCTITE 221. In addition, witness paint marking must be applied to the screws.

d02626

adapter flange — older model version part no. 861930 — newer model version part no. 861931

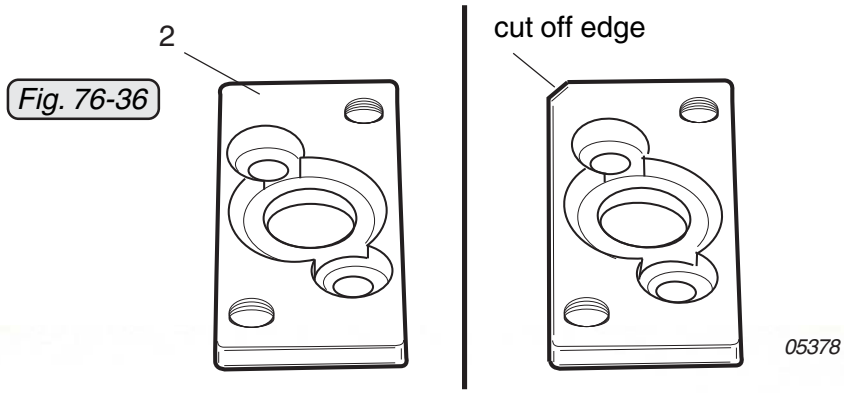

Fig. 76-36

potentiometer — older model version part no. 966480 — newer model version part no. 966481

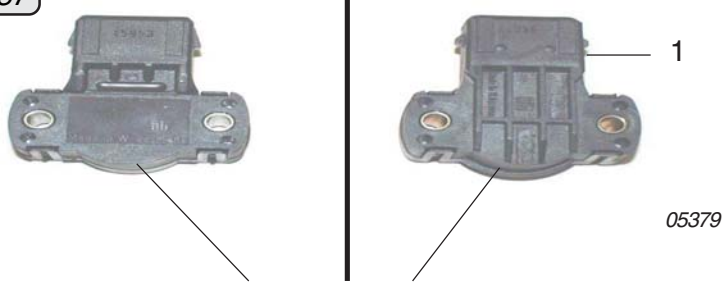

Fig. 76-37

distinguishing feature

◆ NOTE: Small installation tolerances can be compensated by turning the throttle potentiometer. For tolerances, see 76-00-00 sec. 3.1.1.6, otherwise, recalibration is necessary.

- Inspection for physical damage.
- Measurement of the nominal resistance:

  Measure resistance between connections (5) and (7).

  Nominal resistance: 3.2 to 4.8 k
- Measurement of resistance across turning range of fitted throttle.

To check the function of the throttle potentiometer over the operating range, take the following readings:

d04233

Resistance between the connections (6) and (7):

Throttle valve **closed**
(throttle lever pos. 0%): 3.4 to 4.6 kΩ

Throttle valve **open**
(throttle lever pos. 115%): 0.8 to 2.0 kΩ

◆ NOTE: Check complete operating range as shown in the following diagram (Fig. 76-38) for linear resistance progress.

Fig. 76-38

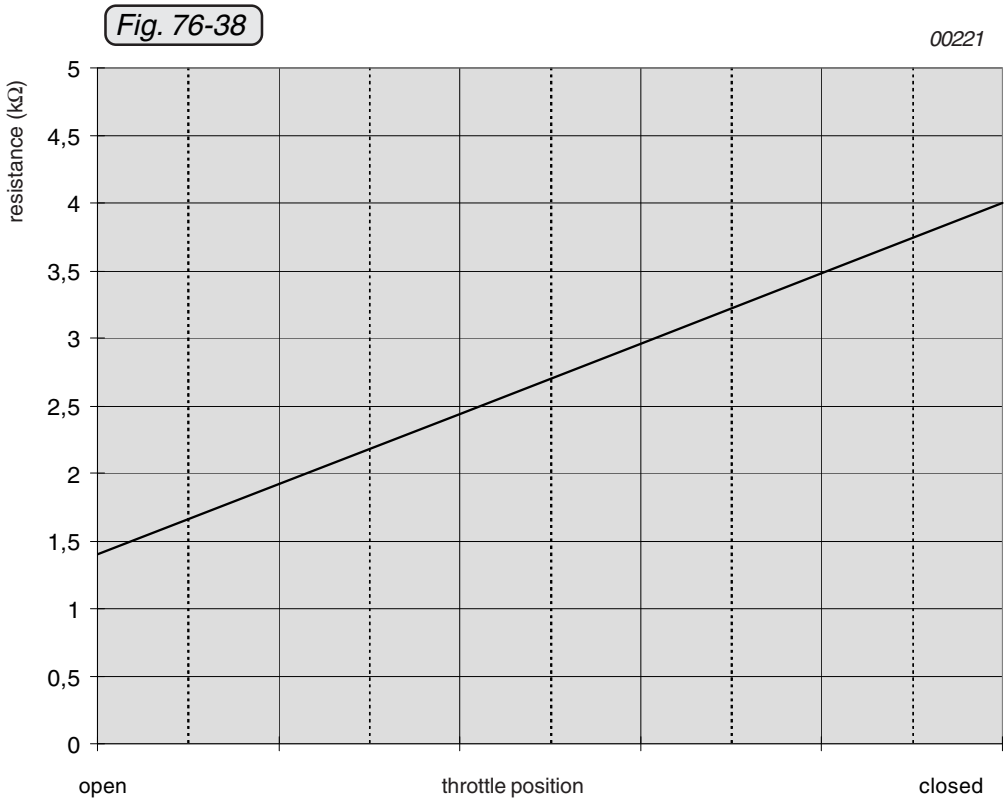

d02626

Resistance between the connections (5) and (6):

Throttle valve **open**
(throttle lever pos. 115%): 2.4 to 3.2 kΩ

Throttle valve **closed**
(throttle lever pos. 0%): 100 to 300 Ω

◆ NOTE: Check complete operating range as shown in the following diagram (Fig. 76-39) for linear resistance progress.

■ CAUTION: In the event of physical damage or resistance readings outside allowance, replace the part without delay.

Fig. 76-39

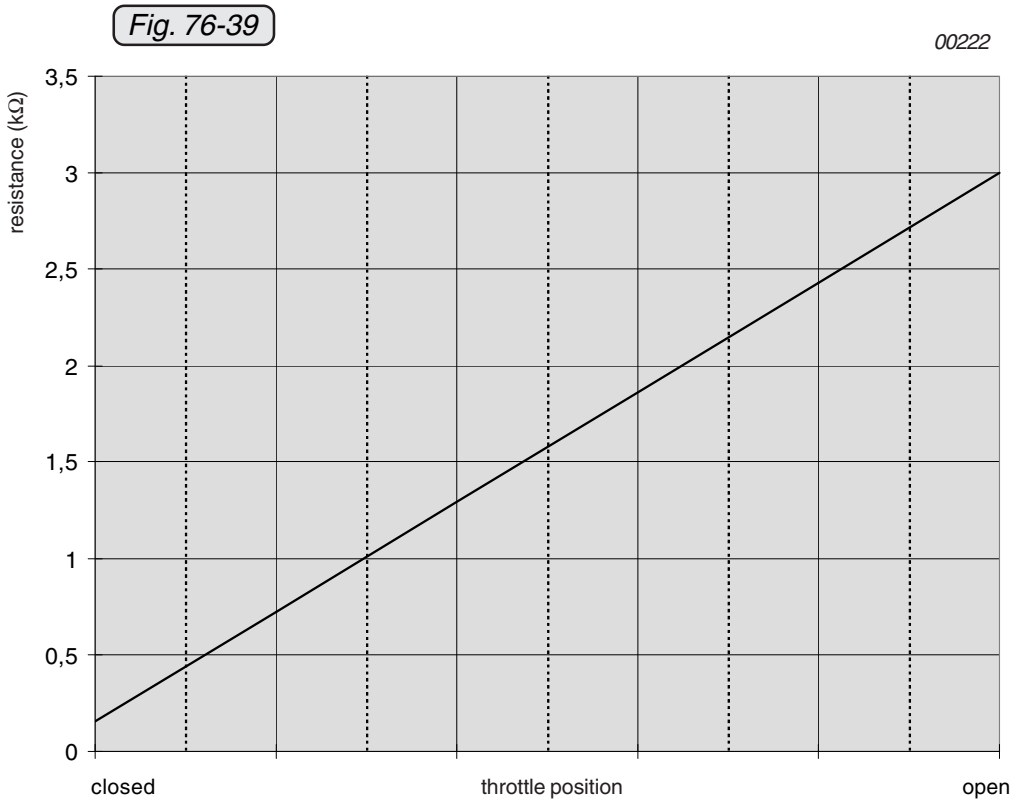

d02626

3.1.2.5) Resistance thermometer (Intake air temperature sensor)

See Figs. 76-40, 76-41 and 76-42.

The sensors (1) for measuring intake air temperature is screwed into the airbox.

■ CAUTION: In the event of physical damage or resistance readings outside allowance, replace part without delay.

- Inspection for physical damage.
- Measurement of the resistance:

  Detach plug connection with wiring harness but re-establish immediately after completion of the check and verify tight fit and engagement of catch.

  Measure resistance between the two terminals (2) and compare with relevant resistance/temperature chart below.

Allowance for resistance: max ±1%

When assembling the resistance thermometer, secure with LOCTITE 243 and tighten to 15 Nm (135 in.lb).

◆ NOTE: On engines equipped with the older TCU version, part no. 966470 to 966473, resistance thermometer part no. 966430 must be used. See SB-914-013, “Turbocharger control unit (TCU) with software level according to RTCA DO 178 B“, latest issue.

d05741

Fig. 76-40

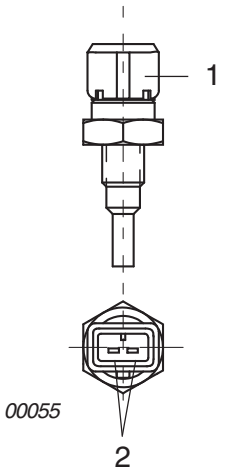

Fig. 76-41

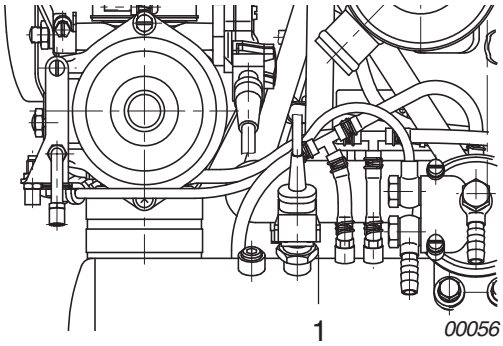

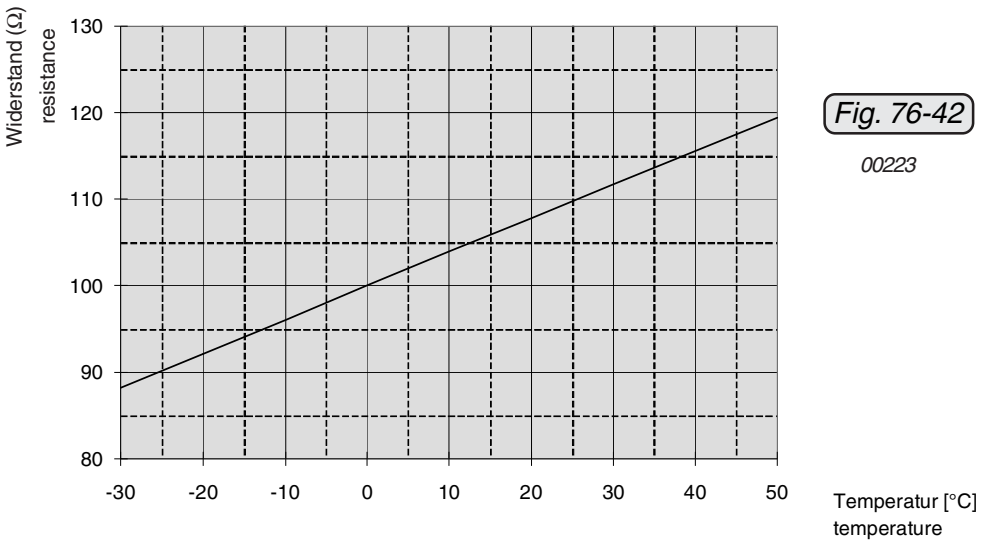

Fig. 76-42

d02626

3.1.2.6) Pressure sensors

See Fig. 76-43.

To prevent mixup of the two pressure sensor inputs, the plug connections are in different colors. In addition, the airbox pressure sensor cable set of the wiring harness is labeled.

Gray plug connection (1) - ambient pressure sensor

Black plug connection (2) - airbox pressure sensor

If a pressure sensor must be replaced, it is necessary to check the current values via communication program (Monitoring). See 76-00-00 sec. 3.1.

If this aid is not at your disposal, an engine test run has to be performed. See corresponding Maintenance Manual (Line Maintenance) for the respective engine type 914 Series.

▲ WARNING: If an inspection reveals irregularities, then the engine must not be taken in operation until the cause is found and rectified.

d02626

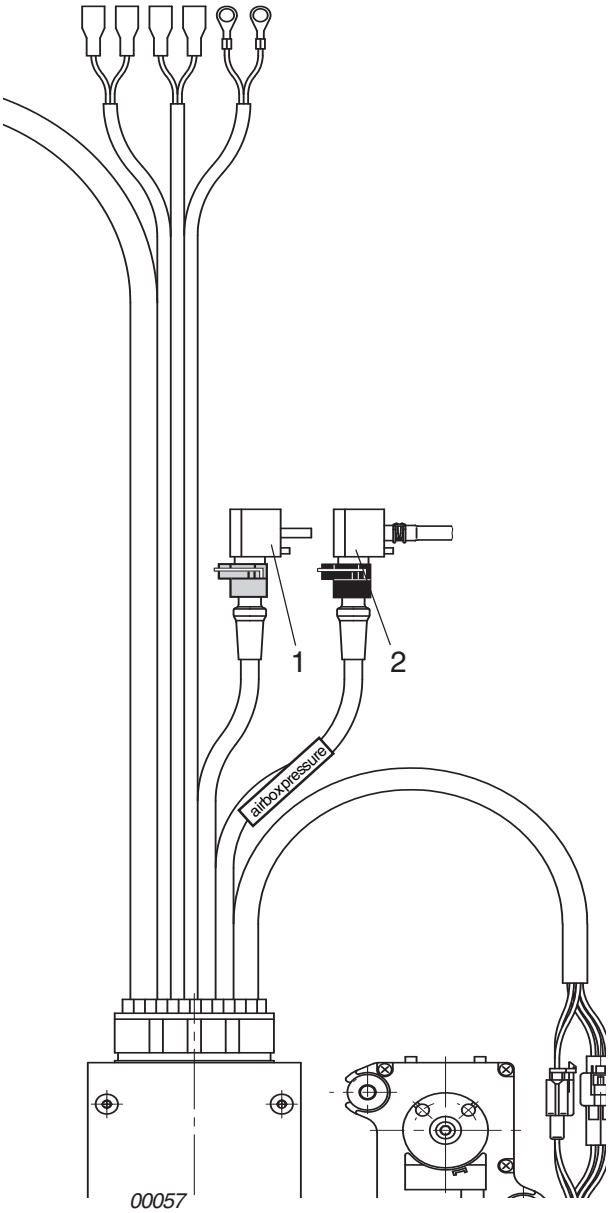

Fig. 76-43

d02626

a) Airbox pressure sensor:

See Figs. 76-44 and 76-45.

On engines with an airbox of older configuration, the installation location of the airbox pressure sensor (2) depends on the aircraft type and is limited by the length of the wiring harness. On engines with an airbox of newer configuration, the airbox pressure sensor (2) is integrated in the airbox. See SI-914-013 and SI-914-015, “Introduction of a new airbox“, latest issue.

■ CAUTION: The sensor is designed for a pressure range of 500 hPa to 2500 hPa and max. pressure must not exceed 3500 hPa.

If the max. pressure is exceeded during the course of measuring, the sensor must be replaced.

When taking the following readings, the plug connection to the wiring harness must be disconnected and reestablished immediately after completion of the checks. The same applies for the air pressure hose.

The easiest way to check the function of the two pressure sensors is to use the communication program. If this program is not at your disposal, the following static checks can be carried out.

- Inspect for physical damage.
- Static check for function of airbox pressure sensor:

Fig. 76-44

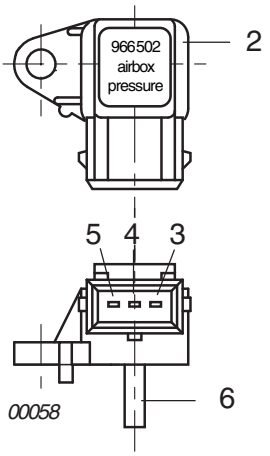

d02626

Allocation of connections for test set-up / legend to Fig. 76-44

(3) Measuring voltage output **Ua**

(4) Ground **(øV)**

(5) Voltage supply **Us**
min. + 3 V, max. + 15 V

(6) Pressure connection

Test set-up

Connect pin (4) to ground and connect pin (5) to positive side of voltage supply **Us**. Apply test pressure to sensor (input 6) Take reading of output voltage between pin (4) and pin (3).

Divide the measured output voltage (Ua) by the supply voltage (**Us**).

◆ NOTE: Calculation of this pressure ratio is required since the diagram is effective over a whole voltage range and not just for a single voltage.

Enter this value in the table Ua/Us. A pressure can be read off at the intersection of the straight lines.

Max. deviation ± 40 hPa

■ CAUTION: In the event of physical damage or resistance readings outside allowance, replace the part without delay.

Fig. 76-45

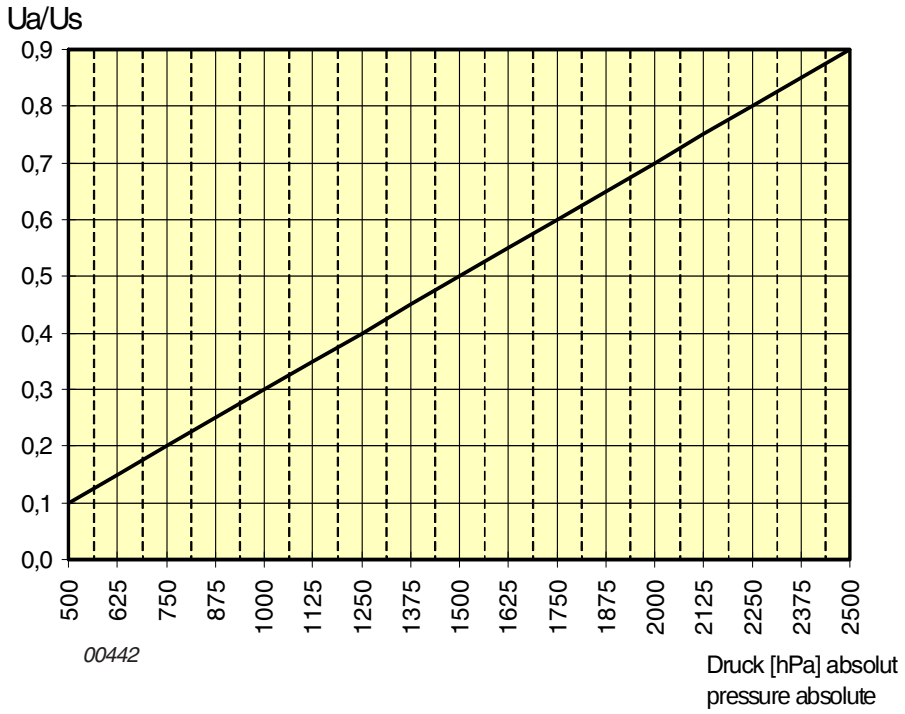

d02626

b) Static pressure sensor:

See Figs. 76-46 and 76-47.

The location of the ambient pressure sensor (1) depends on the aircraft type, but is limited by the length of the wiring harness.

■ CAUTION: The sensor is designed for a pressure range of 100 hPa to 1200 hPa and the max. pressure must not exceed 3500 hPa.

If the max. pressure is exceeded during the course of measuring, the sensor must be replaced.

When taking the following readings the plug connection to the wiring harness has to be disconnected and reestablished immediately after completion of checks. The same applies for the air pressure hose.

The easiest way to check function of the two pressure sensors is by use of the communication program. If this program is not at your disposal, the following static checks can be carried out.

- Inspection for physical damage.
- Static check for function of airbox pressure sensor:

Fig. 76-46

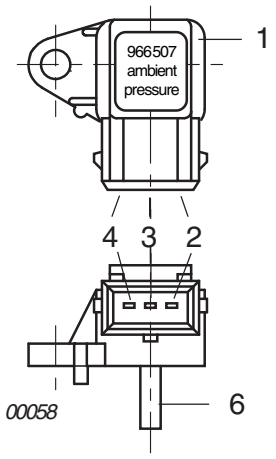

Allocation of connections for test set-up / legend to Fig. 76-46

(2) Measuring voltage output **Ua**

(3) Ground **(øV)**

(4) Voltage supply **Us**
min. + 3 V, max. + 15 V

(6) Pressure connection

d02626

Test set-up

Connect pin (4) to ground and connect pin (5) to positive side of voltage supply **Us**. Apply test pressure to sensor (input 6) Take reading of output voltage between pin (4) and pin (3).

Divide the measured out put voltage (Ua) by the supply voltage (**Us**).

◆ NOTE: Calculation of this pressure ratio is required since the diagram is effective over a whole voltage range and not just for a single voltage.

Enter this value in the table Ua/Us. A pressure can be read off at the intersection of the straight lines.

Max. allowance ± 60 hPa

■ CAUTION: In the event of physical damage or resistance readings outside allowance, replace the part without delay.

Fig. 76-47

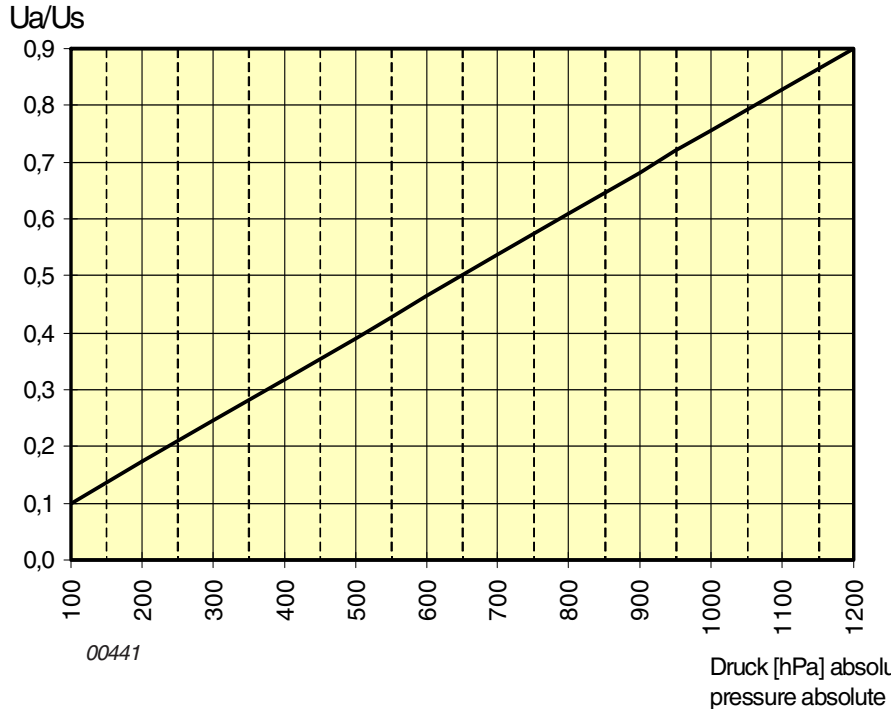

d02626

3.1.2.7) Servo motor

See Fig. 76-48

The installation location of the servo motor (1) depends on the aircraft type but is limited by the length of the wiring harness and bowden cable length to wastegate.

- After switching on the TCU, ensure that the automatic self check of the servo motor is performed. During this auto test the complete operating range is traversed and afterwards the engine remains in position corresponding to throttle lever position.
- Inspection for physical damage.

When taking the following readings, the plug connection with the wiring harness must be disconnected and reestablished immediately after completion of the check.

■ CAUTION: In the event of physical damage or resistance readings outside allowance, replace the part without delay.

- Measurement of the **nominal resistance**:

  Measure resistance between connections (2) and (4).

  Nominal resistance: 4.4 to 5.5 kΩ

- Measuring the resistance with wastegate closed:

  Check the following values with the throttle in 0% position:

  Resistance between the terminals (2) and (3):

  Resistance value: 0 to 70 Ω

  Resistance between the terminals (4) and (3):

  Resistance value: 4.6 to 5.4 k

- Checking between terminals (5) and (6) for power supply:

  Resistance value: 5.0 to 20.0 Ω

■ CAUTION: When replacing the servo motor, verification of the relevant values using of the communication program (monitoring) is required. See 76-00-00 sec. 3.1.

d02626

If this aid is not at your disposal, an engine test run must be performed. See corresponding Maintenance Manual (Line Maintenance) for the respective engine type 914 Series.

▲ WARNING: If a check reveals shortcomings, the engine must not be taken into operation until the cause is found and rectified.

Fig. 76-48

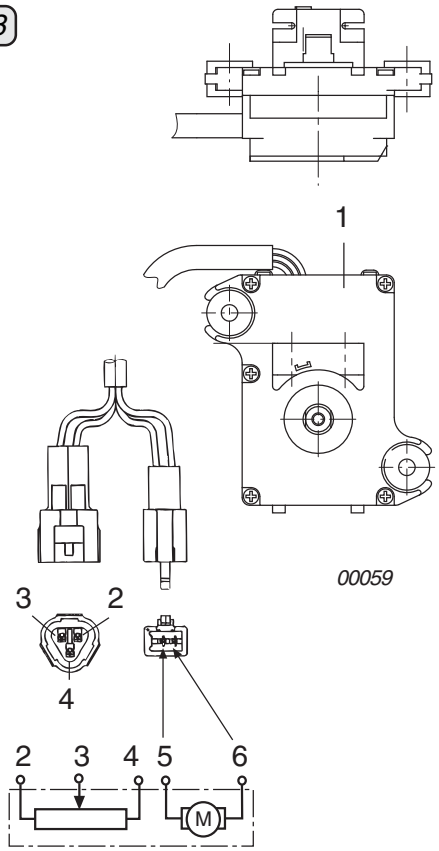

d02626

3.1.2.8) Circuit breaker for servo motor

See Fig. 76-49.

The location of the circuit breaker (1) depends on the aircraft type, but is limited by the length of the wiring harness.

■ CAUTION: The circuit breaker is not included in the delivery range of the engine. Check circuit breaker according to the aircraft manufacturers instructions.

- Operational test of circuit breaker:

1) - circuit breaker closed

   - switch on TCU

   The servo motor self test is performed.

2) - circuit breaker open

   - switch on TCU

   No self test of servo motor is performed.

With the circuit breaker open, the servo motor must not start turning. The orange caution lamp starts flashing.

■ CAUTION: If the required boost pressure cannot be reached or if the circuit breaker does not act correctly, locate the cause. Until the cause has been found and rectified, engine operation is only permitted for ground testing.

■ CAUTION: In the event of physical damage or incorrect operation, replace the part without delay.

Fig. 76-49

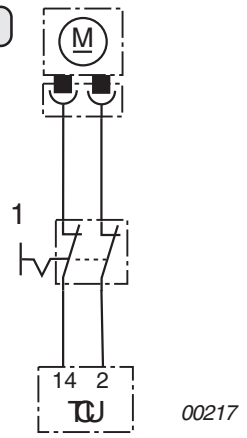

d02626

3.1.2.9) Three-way solenoid valve

See Fig. 76-50

The 3-way solenoid valve (1) is installed on the engine suspension frame or directly on airbox on newer engines.

Due to a modification a new 3-way solenoid valve has been introduced. See SI-914-022, „Running Modifications“, latest issue.

Accessories and attachment of the 3-way solenoid valve could differ because of the possible variants of the airbox.

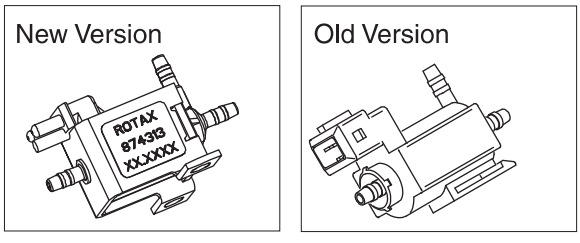

If the 3-way solenoid valve is fastened to the engine suspension frame, then not all parts of the retro-fitting kit are needed. In addition the following parts are needed:

<u>Variant 1:</u> for airbox part no. 667167

◆ NOTE: all parts for variant 1 are included in retrofit kit part no. 881040

<u>parts requirement - retrofit kit part no. 881040</u>

Fig No..	New p/n	Qty/ engine	Description	Old part no.	Application
1	874313	1	3-way solenoid valve	874310	airbox
2	666010	1	adapter cable	-	wiring harness
3	951040	2	bracket	-	3-way solenoid valve
4	840391	2	allen screw M6x14	-	bracket
5	842040	2	lock nut M6	-	bracket
6	866710	4	tie wraps	-	3-way solenoid valve

d04355

Disassembly and assembly - Variant 1

Remove connection wiring harness (11) of 3-way solenoid valve (1).

Cut off tie wraps (6).

Loosen 3x clamps (12) from 3-way solenoid valve and remove lines.

Remove 3-way solenoid valve.

Connect adapter cable (2) to wiring harness.

Install bracket (3) onto airbox.

Tighten 3-way solenoid valve with allen screw (4) and lock nut (5). Tightening torque 8 Nm (70 in. lb).

■ CAUTION: Route all pressure connections such that there will be no sharp bends or chafing.

Push lines onto fittings as far as they will go and secure with clamps (12).

Position lines and adapter cable (2) and secure with clamps (6).

Variant 1

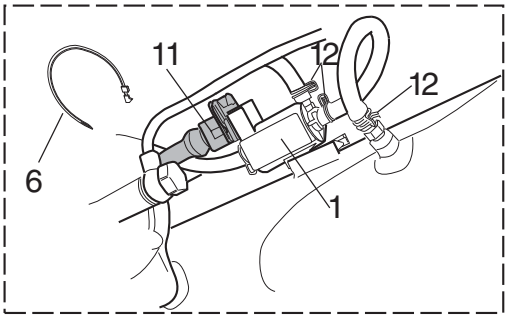

07234

Fig. 76-50

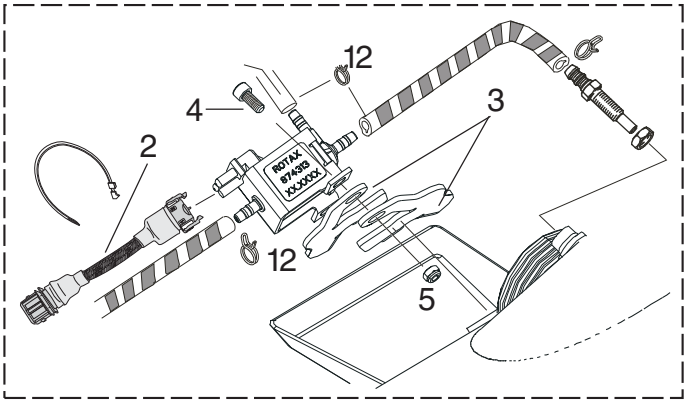

07233

d04355

Variant 2 **for airbox part no. 867753**

(attachment of the 3-way solenoid valve on the engine suspension frame)

parts requirement:

Fig No.	New part no.	Qty/ engine	Description	Old part no.	Application
-	881040*	1	retrofit kit	-	airbox
7	n.a**	1	bracket	-	3-way solenoid valve
8	241841	2	allen screw M5x12	-	bracket
9	927571	2	washer 5,3	-	bracket
10	842030	2	lock nut M5	-	bracket

* following parts of the retrofit kit are not necessary for Variant 2:

2x bracket (3), 2x allen screw M6x14 (4), 2x lock nut M6 (5)

** not yet available.

Disassembly and assembly - Variant 2

Remove connection wiring harness (11) of 3-way solenoid valve (1).

Cut off tie wraps (6).

Loosen 3x clamps (12) from 3-way solenoid valve and remove lines.

Loosen clamps (13) from engine suspension frame (14) and remove 3-way solenoid valve.

Connect adapter cable (2) to wiring harness.

Tighten the new 3-way solenoid valve with allen screw (8), washer (9) and lock nut (10) onto bracket (7). Tightening torque 8 Nm (70 in. lb).

Install 3-way solenoid valve with clamp (13) onto engine suspension frame.

■ CAUTION: Route all pressure connections such that there will be no sharp bends or chafing.

d04355

Fit the push lines onto the 3-way solenoid valve and secure with clamp (6).

Position push lines and adapter cable (2) and secure with clamps (6).

■ CAUTION: Always obey the additional instruction.

Variant 2

07231

Fig. 76-51

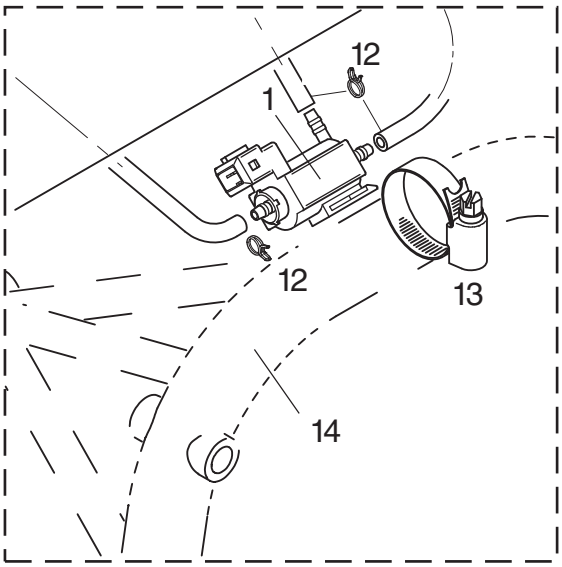

07232

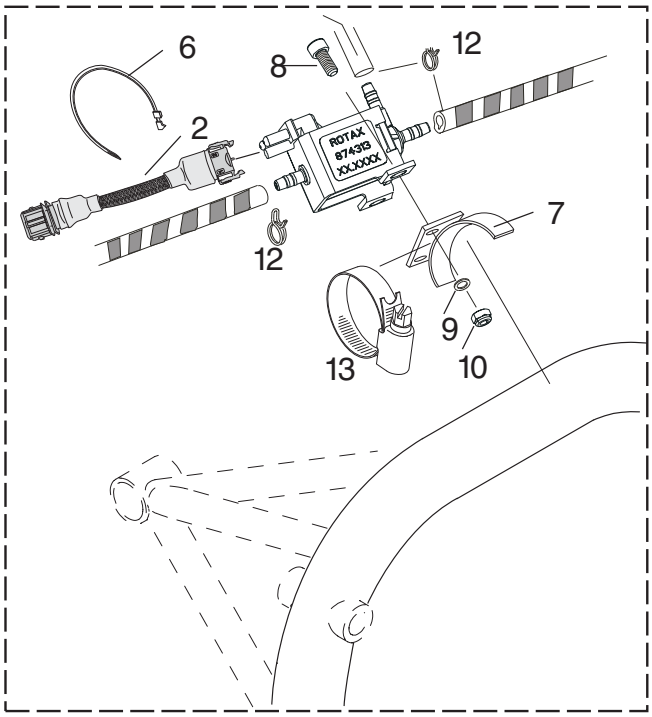

d04355

■ CAUTION: In the event of physical damage, mechanical defects or readings outside tolerance, replace the part without delay.

- Inspection for physical damage
- check for pneumatic passage

  Disconnect the pressure connection lines. See 73-00-00 sec. 2.7.
- check the mixture enrichment (dynamic)

  To do so, fit a T-fitting into line between solenoid valve and float chamber to facilitate the measuring by pressure gauge of the pressure at airbox pressure exceeding 1250 hPa. The T-fitting may remain in place, but for standard operation it must be securely closed.
- Measure the resistance between the two terminals (2):
  - Disconnect plug connection with wiring harness but reestablish immediately after completion of check and verify tight fit and engagement of catch.
- resistance at 20 °C (68 °F): 28.3 to 31.1 Ω

  (older model version)
- resistance at 20 °C (68 °F): 22 to 25 Ω

  (newer model version)

Fig. 76-52

08489

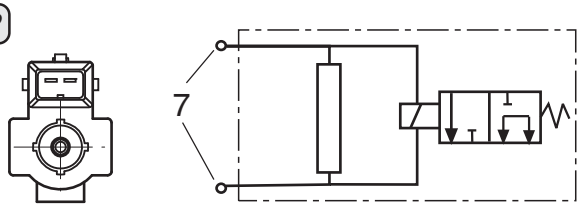

d04355

3.2) Wiring diagrams

3.2.1 Engine external (on the 914 Series)

See Installation Manual for the respective engine type 914 Series, latest issue.

d04355

4) Form Sheets

Fig. 76-53

d05741

Prüfprotokoll für Turboladerregler / Inspection protocol for turbo charger control unit

Motor / Engine type:	_____	TSN: _____	
Motor / Engine serial no.:	_____	TSO: _____	
TCU Serien-Nr. TCU serial no.	_____	TSN: _____ TSO: _____	
TCU Teile Nr. TCU part no.:	_____		
TCU Programmversion TCU Program-Version:	☐ TLR 4.3	☐ TLR 4.5	☐ TLR 4.6
Sichtkontrolle: Visual check:	_____		
Prüfdongle, Serien-Nr.: Check dongle, serialno.:	_____		
Prüfung mit: Check with:	ROTAX Testkoffer ROTAX testcase ☐	am Motor on engine ☐	
Vergaser 2/4, Serien-Nr.: carburetor 2/4, serial no.:	_____		

Lampenkontrolle / lamp control

Lampen leuchten beim Einschalten: lamps flash during switch on:	orange Lampe orange lamp ☐	rote Lampe red lamp ☐

Anreicherungsventilkontrolle / solenoid control

Solenoid schaltet bei : solenoid operates at :	☐ 1250 mbar(96 470/966471) ☐ 1260 mbar(966473 / 966741)	Airboxdruck Airbox pressure

Bemerkungen / Remarks : _____

Unterschrift Prüfer / Signature Tester : _____ Datum / Date: _____

Over Boost-Kontrolle /over-boost-control

rote Lampe leuchtet bei : red lamp flashes at :	O.K. ☐	Airboxdruck >1550 mbar airbox pressure >1550mbar

Plausibiltäts-Kontrolle / plausibility-control (MONITOR-Oberfläche / MONITOR-menu)

LOAD [1] (idle) :	0È % (Sollwert/target value)	_____ %
LOAD [1] (full) :	115 % (Sollwert/target value)	_____ %
ambient pressure[2]:		_____ mbar
airbox pressure[2]:		_____ mbar
airbox temperature[3]:		_____ °C
servoposition (idle)[4]:	100 %±3 (Sollwert/target value)	_____ %

1) lineare Kennlinienverlauf / Linear values of load
2) +/- 10 mbar Differenz der beiden Werte (vgl. Tagesdruck) /
+/- 10 mbar difference between the two values (compare actual pressure of the day)
Mit neuem Umgebungsdrucksensor / With new ambient pressure sensor
+60 mbar (+/- 10 mbar) Differenz der beiden Werte (vgl. Tagesdruck) /
+60 mbar (+/- 10 mbar) difference between the two values
3) die Temperatur sollte in etwa der Umgebungstemperatur entsprechen /
temperature should be equal to ambient temperature
4) Servoposition bei IDLE = 100% Servoposition = Waste-Gate geschlossen /
Servoposition at IDLE = 100% servoposition = Waste-Gate closed

Kalibrier-Kontrolle / calibration-control

	966470 ☐ 966471 ☐	966473 ☐ 966741 ☐
Servo OFFSET	10 ☐	60 ☐
Servo RANGE	1003 ☐	900 ☐
Throttle OFFSET	60 ☐	60 ☐
Throttle RANGE	710 ☐	710 ☐
Airbox pressure sensor calibration parameter A	12219 ☐	12219 ☐
Airbox pressure sensor calibration parameter B	250 ☐	250 ☐
Ambient pressure sensor calibration parameter A	6720 ☐	6720 ☐
Ambient pressure sensor calibration parameter B	-37 ☐	-37 ☐
	TLR 4.3	TLR 4.5 TLR 4.6

NOTES

d04355

SECTION 78

EXHAUST SYSTEM AND TURBOCHARGER

1) Table of contents

SECTION 78
EXHAUST SYSTEM AND TURBOCHARGER

1) Table of contents ..... 78-00-00 / 1
2.) System description ..... 78-00-00 / 3
2.1) Exhaust system (on the 912 Series) ..... 78-00-00 / 3
2.2) Exhaust system (on the 914 Series) ..... 78-00-00 / 3
2.3) Turbocharger (only on the 914 Series) ..... 78-00-00 / 3
2.3.1) Exhaust turbocharger ..... 78-00-00 / 4
2.4) Connections for instrumentation ..... 78-00-00 / 5
2.4.1) Exhaust gas temperature display (optional) ..... 78-00-00 / 5
3) Maintenance ..... 78-00-00 / 7
3.1) Disassembly of the complete exhaust system (on the 912 Series) ..... 78-00-00 / 7
3.2) Disassembly of the complete exhaust system incl. turbocharger and engine suspension frame (on the 914 Series) ..... 78-00-00 / 7
3.3) Inspection of the exhaust system and turbocharger components (only on the 914 Series) ..... 78-00-00 / 11
3.3.1) Exhaust bend and exhaust manifold ..... 78-00-00 / 11
3.3.2) Muffler: ..... 78-00-00 / 11
3.3.3 Turbocharger ..... 78-00-00 / 12
3.4) Assembly of the complete exhaust system (on the 912 Series) ... 78-00-00 / 16
3.5) Assembly of the complete exhaust system incl. turbocharger (on the 914 Series) ..... 78-00-00 / 16
3.6) Bowden cable, rope sheave and spring for wastegate control (on the 914 Series) ..... 78-00-00 / 20
3.6.1) Disassembly ..... 78-00-00 / 20
3.6.2) Checking of the components ..... 78-00-00 / 21
3.6.3) Assembly and adjustment ..... 78-00-00 / 21
4) Wear limits ..... 78-00-00 / 23

d04781

NOTES

2.) Systems description

2.1) Exhaust system (on the 912 Series)

On ROTAX engines of the 912 Series, the exhaust system assy. is not included in the ROTAX scope of delivery, but it is available optionally. The engine is supplied only with the 4 exhaust sockets on the cylinder head.

The exhaust system must be configured or manufactured by the aircraft or fuselage manufacturer.

For disassembly, inspection and assembly of the exhaust system, observe the aircraft manufacturers instructions.

The exhaust muffler especially designed for the ROTAX engines 912 S / ULS can be used also on the ROTAX engines 912 UL / A / F. Engine performance and specific fuel consumption remain unchanged or are slightly better when using this muffler.

The muffler is 0.3 kg lighter than the muffler which is usable only for the 912 A/F/UL Series.

By optimizing the design of the muffler the noise emission may seem subjectively higher compared with muffler for 912 A/F/UL Series. The exact measuring of the actual noise emission can be conducted only when the muffler is installed in the aircraft.

2.2) Exhaust system (on the 914 Series)

The exhaust system on ROTAX engines of the 914 Series collects all gases which accumulate in the combustion chamber of the cylinders and routes them via exhaust bends and exhaust manifold to the exhaust turbocharger. There, the combustion gases drive the exhaust gas turbine to achieve a power increase. See 78-00-00 sec. 2.3. From the exhaust turbocharger, the combustion gases are routed to the muffler, which is fitted for noise reduction.

The exhaust system is made of stainless steel. The exhaust bend is connected to the exhaust manifold by means of slide sleeves to ensure that expansion due to heat can be compensated for.

The exhaust bends are sealed to the cylinder head by the ridge on the exhaust bends. The muffler is supported via the exhaust bracket on the engine suspension frame.

Owing to continuous further development, the exhaust bends were slightly re-worked. The couplings were optimized for their position.
Position of the EGT connections to the exhaust bends for cylinders 3 and 4 were routed such that installation of the new drip trays is possible.

d05742

◆ NOTE: If replacement of any single old part number is necessary, you must replace it with the same old part number. If the old part number is not available, the entire assembly including all 4 pipes and manifold must be replaced with new part numbers. New style pipes and manifold are not interchangeable with old style.

2.3) Turbocharger (only on the 914 Series)

ROTAX engines of the 914 Series are equipped with an exhaust turbocharger which makes use of the energy in the exhaust gas for precompression of the intake air.

The boost pressure in the airbox is controlled by means of an electronically controlled flap (wastegate) on the exhaust gas turbine.

The wastegate is actuated by an electric servo motor via a bowden cable.

2.3.1) Exhaust turbocharger

See Fig. 78-1

The exhaust turbocharger is basically an arrangement of two turbo machines, a turbine and a blower, on a common shaft.

The turbine transforms the energy of the hot exhaust gases and drives a blower which aspirates ambient air and transfers it precompressed via the carburetors into the cylinders.

The sole operational connection between engine and turbo is the air and exhaust stream. The speed of the turbo depends mainly on the pressure ratio at the turbine impeller but not directly on engine speed.

Fig. 78-1

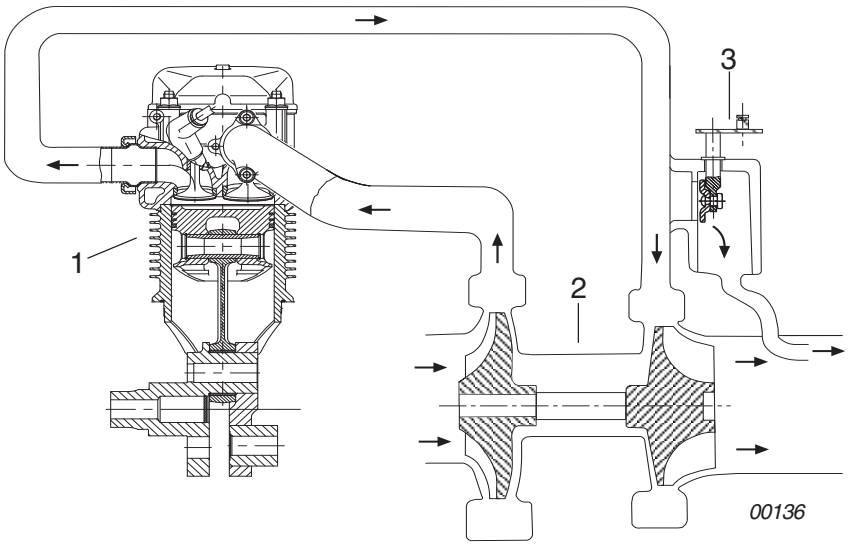

d04781

◆ NOTE: Fig. 78 -1 shows a schematic arrangement of a boost pressure control with the wastegate in the exhaust stream

(1) engine
(2) exhaust turbocharger
(3) boost pressure regulating valve (wastegate)

Because of the large speed range of the engine and the varying power requirement, control of the exhaust turbocharger is necessary to achieve the respective nominal pressure in the airbox.

The waste gate directs part of the engine exhaust gases so that they bypass the turbine and flow directly into the exhaust (by-pass).

◆ NOTE: With the wastegate completely open, the engine performance can reach up to approx. 70 kW since not all of the exhaust gases bypass the turbine.

2.4) Connections for instrumentation

■ CAUTION: Consult also the relevant sections on connections for instrumentation in the latest Installation Manual.

2.4.1) Exhaust gas temperature display (optional)

The exhaust gas temperature is monitored by means of 4 sensors on the exhaust manifold. The temperature display device is connected via NiCrNi control lines.

On 912 Series: The manufacturer of the exhaust system must attach or provide the connections M8x1 for installation of the metalsheathed thermocouples, part no. 966370, in the exhaust bends.

On 914 Series: The connection thread M8x1 for attachment of the metalsheathed thermocouples, part no. 966370, are already provided in the exhaust bends.

d04781

NOTES

3) Maintenance

The following sections describe maintenance procedure for engines of the 912/914 Series above and beyond the maintenance and special checks, see corresponding Maintenance Manual (Line Maintenance) for the respective engine type, 912 Series or 914 Series, and the systems descriptions given hitherto. The description is subdivided into subsections and descriptions of the function of the various systems.

3.1) Disassembly of the complete exhaust system (on the 912 Series)

▲ WARNING: For disassembly, observe the aircraft manufacturers instructions.

3.2) Disassembly of the complete exhaust system incl. turbocharger and engine suspension frame (on the 914 Series)

See Figs. 78-2 and 78-3.

■ CAUTION: Work must be carried out on a cold engine!
Danger of burns!

Exhaust manifold / exhaust system assembly:

Unhook the Bowden cable for the wastegate control, see 78-00-00 sec. 3.6.1.

Remove lock nuts M8 (1) on exhaust bend flanges.

◆ NOTE: If one of the studs M8x23/20 (2) should also become loose, refit and tighten to 8 Nm (71 in.lb). The longer threaded end (23 mm) (0.9 in.) to be screwed into cylinder head.

Withdraw exhaust bends (3) by pulling and swiveling them slightly.

Detach turbo pressure (4) and suction oil lines (5) from the oil pump. See Fig. 78-2. For further details on “Turbocharger oil circuit”, see 79-00-00.

Slacken tension clamp (6) but do not detach or remove it from the exhaust bracket (7).

Remove the allen screw M10x50 (8) (attachment of the turbocharger bracket) together with the lock washer and washer and allen screw M6x50 (25) with the compensating shim.

Also detach connection (9) turbocharger bracket - engine suspension frame (not supplied with the engine).

d02627

Support the complete unit of exhaust - turbocharger - manifold, remove the tension clamp and take off the complete unit. Remove the distance sleeve (10) 10.5/17/15 from the engine suspension frame attachment.

◆ NOTE: If necessary, remove the Bowden cable (11) for wastegate control. See 78-00-00 sec. 3.6. This is normally not necessary.

Muffler:

◆ NOTE: There is no need to disassemble the complete unit of muffler - turbocharger - exhaust manifold for the removal of the muffler bracket.

To disassemble the muffler (12), remove the hex. screw (13) M8x16 with the washer.

After removing the 5 nuts (16) with the washer and support plate (15), the muffler can be taken off.

Turbocharger bracket:

The suction oil line (5) must also be attached to the turbocharger bracket (16) by means of a cable clamp (18), allen screw (18) M5x12 and lock nut (19). Remove these items first.

The turbocharger bracket is attached on the turbine housing by 3 hex. screws (20) M8x16.

Unscrew these 3 screws as far as possible.

◆ NOTE: These screws cannot be removed completely straight away as they touch the bearing housing. For complete removal, it is necessary to slacken the fourth attachment screw slightly.

■ CAUTION: To prevent any damage to the turbine impeller, fit the attachment screws (20) again. This will ensure that the turbine housing will not separate from the impeller.

Ensure that the two retaining ring halves are in position.

d02627

Exhaust manifold:

◆ NOTE: There is no need to disassemble the complete unit of muffler - turbocharger - exhaust manifold for the removal of the muffler bracket.

The exhaust manifold (22) is directly attached to the turbine housing by means of allen screws (23) M8x25 and nuts (24) and to the holder (26) by means of allen screw M8x50 (25).

Exhaust bracket:

◆ NOTE: There is no need to disassemble the complete unit of exhaust - turbocharger - exhaust manifold for the removal of the muffler bracket.

Remove allen screw (27) M10x50 along with the lock washer and washer.

Also, detach connection (28) of exhaust bracket with engine suspension frame (not supplied with the engine).

Remove distance sleeve (29) 10.5/17/15 from the arm of the engine suspension frame.

Fig. 78-2

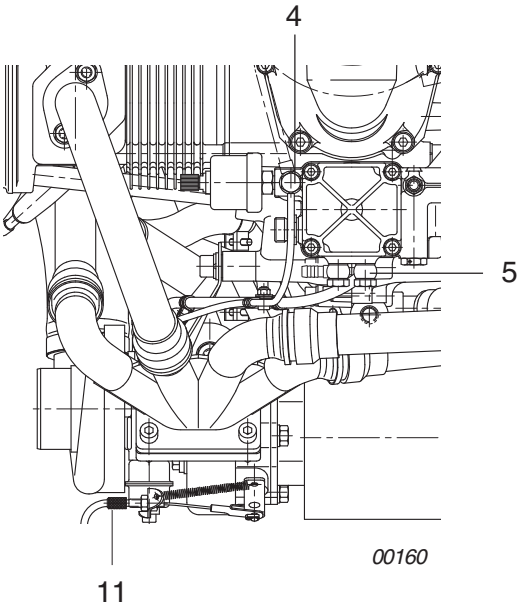

d02627

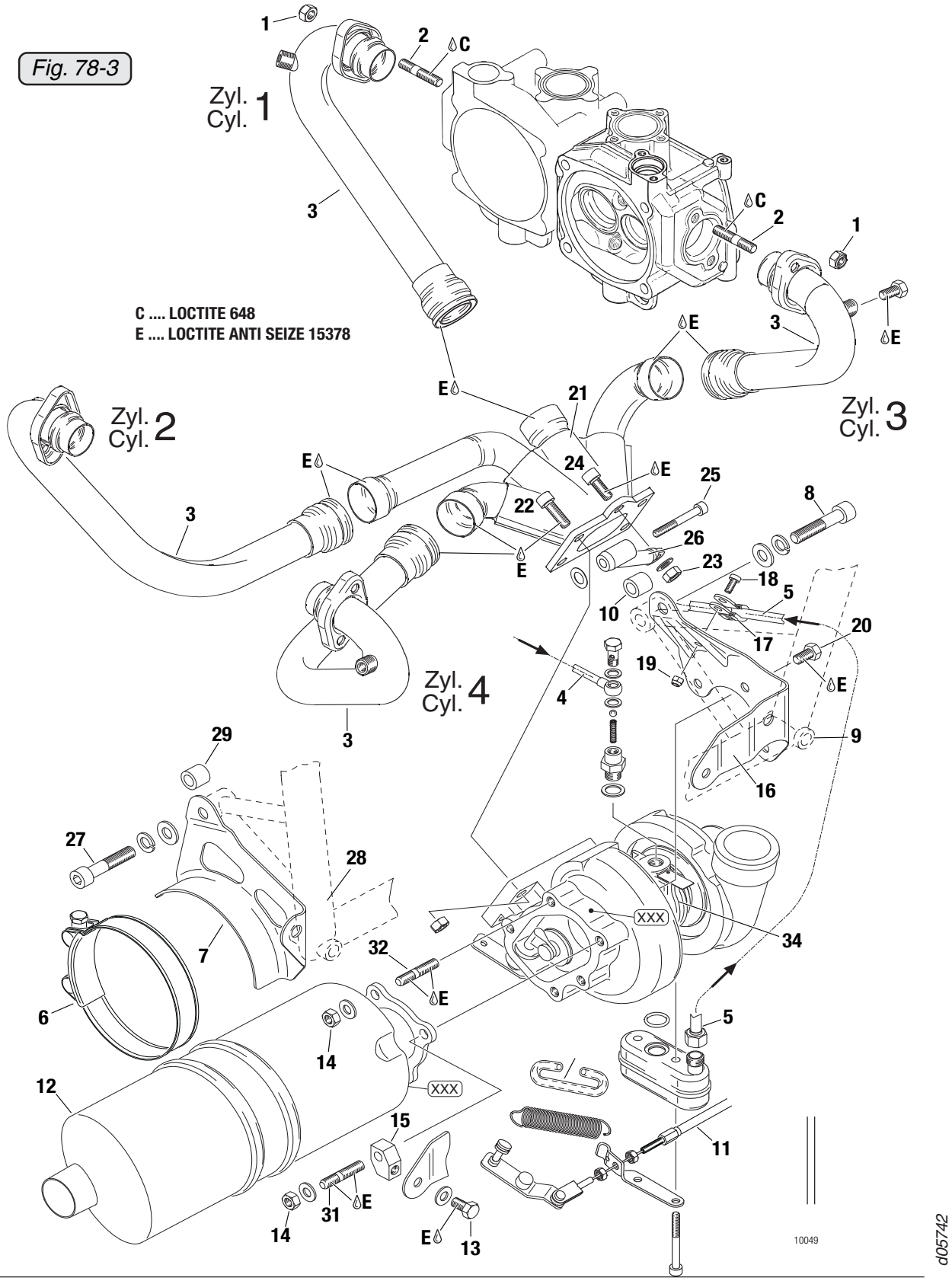
Fig. 78-3
Zyl. Cyl. 1
Zyl. Cyl. 2
Zyl. Cyl. 3
Zyl. Cyl. 4
C .... LOCTITE 648
E .... LOCTITE ANTI SEIZE 15378
XXX
10049
d05742

3.3) Inspection of the exhaust system and turbocharger components (only on the 914 Series)

See Fig. 78-3

Visual inspection of all components.

■ CAUTION: Because of the high thermal stress, inspect the complete exhaust system especially for crack formation.

3.3.1) Exhaust bend and exhaust manifold

Visual inspection of all components.

The wear on the walls of the slide seats on the exhaust bend and the exhaust manifold must not exceed approx. 0.3 mm (0.01 in.). See Fig. 78-7

■ CAUTION: On older engine versions, observe SB-914-017.

On newer versions, the EGT connections have been displaced so that the new drip trays can be assembled (screwed to the airbox).

■ CAUTION: The flanges of the exhaust bends (3) must not touch the cylinder heads.

On engines of older design, it is not possible to replace individual parts. If it becomes necessary to replace one exhaust bend or exhaust manifold, all 4 exhaust bends including exhaust manifolds must be replaced. See SI-914-022, “Running modifications”, latest issue.

3.3.2) Muffler:

■ CAUTION: When inspecting the muffler, also observe SB-914-006, “Employment of a muffler of reduced noise emission“, latest issue. SB-914-015, “Checking or replacement of the exhaust muffler of reduced noise emission“, latest issue. SB-914-017, “Checking or replacement of exhaust bend“, latest issue and SB-914-028, “Inspection of exhaust muffler“, latest issue.

d05742

3.3.3) Turbocharger

See Fig. 78-4 up to Fig. 78-14

Visual inspection of the turbocharger.

◆ NOTE: The turbocharger is handled as a complete unit, i.e. no spare parts are available from BRP-Rotax. In the event of damage, the complete unit has to be replaced.

a) Check plan surface of the tubine opening

See Fig. 78-4

Use a straight edge to test for distortion. A distortion of max. 0.1 mm (0.004 inch)is allowed. If the max allowed distortion is exceeded then it is possible to rework the surface up to 0.5 mm (0.02 inch). The amount of the rework has to be recorded in the appendix.

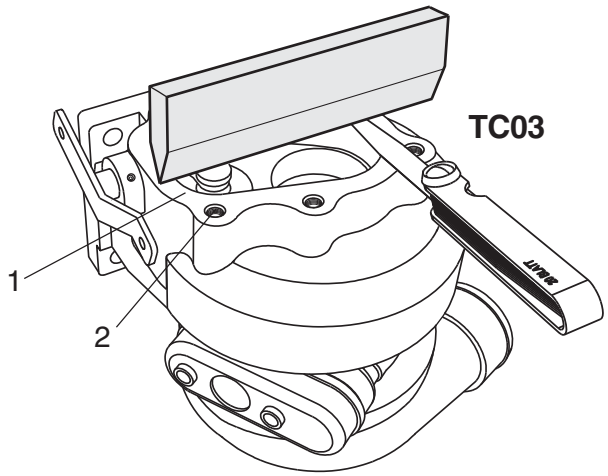

Fig. 78-4
08463

b) Check threaded hole for damage

See Fig. 78-4

■ CAUTION: It is not allowed to repair any of the threads (2) inside of the turbine housing with thread inserts.

c) Check rotor turbine for clearance

See Fig. 78-5

Apply slightly a radial pressure onto the shaft to minimize the gap between the compressor casing and the compressor wheel. The gap must never be less than 0.1 mm (0.004 inch). Check the complete circumference of 360°.

d04356

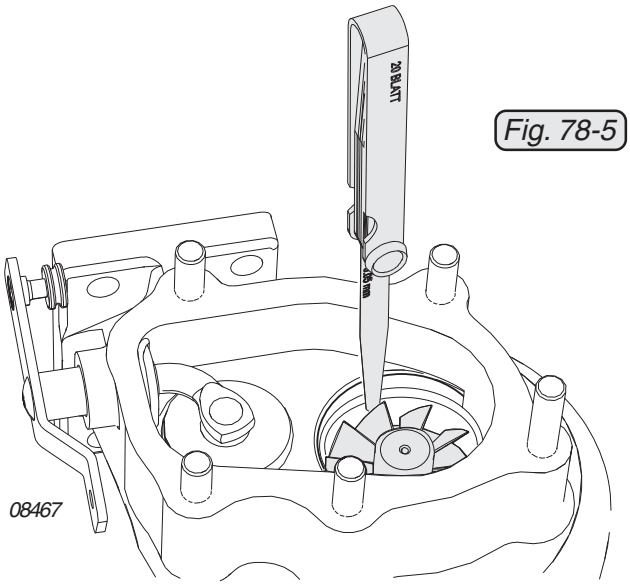

Fig. 78-5

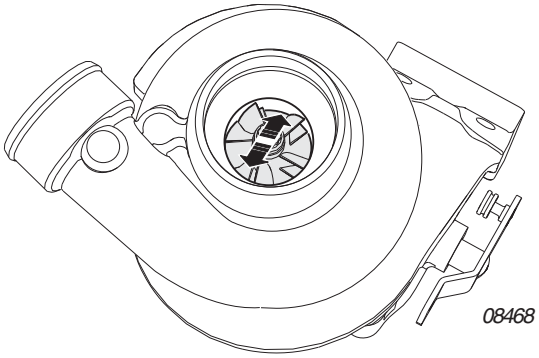

Fig. 78-6

d) Check compressor wheel for clearance

See Fig. 78-6

Apply slightly a radial pressure onto the shaft whereby it must not contact the compressor housing. Check the complete circumference of 360°.

e) Check wastegate lever

See Fig. 78-7

Check the wastegate lever for free movement. If it does not move freely, lubricate the axle of the wastegate with LOCTITE Anti-Seize 8151, ROTAX part no. 297434.

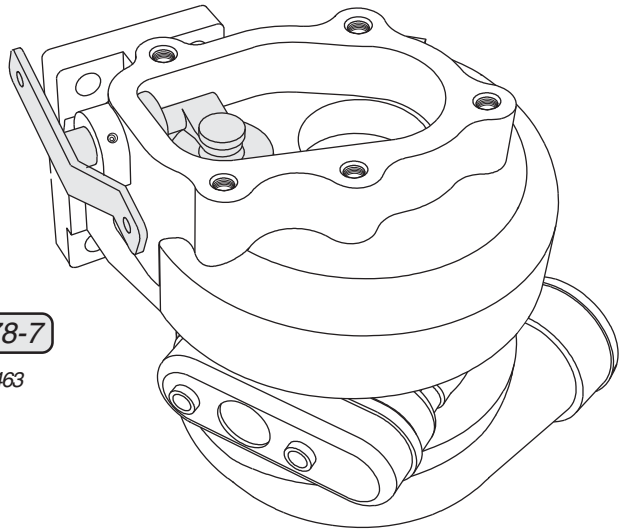

Fig. 78-7

d04356

■ CAUTION: On older engine versions, also observe SB-914-005, “Introduction of a turbo charger with a modified wastegate“, latest issue.

e) Axial- and Radial- clearance charger shaft

See Fig. 78-8

Record the readings in the appendix.

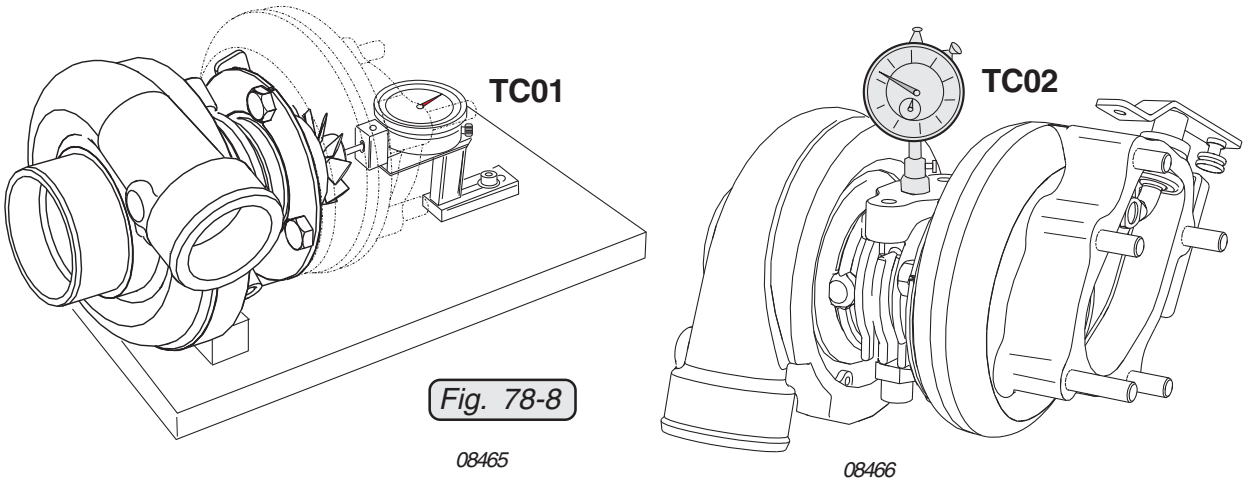

Fig. 78-8

f) Testing the impeller shaft

See Fig. 78-9

The bearings are tested by means of the pressure drop measuring method.

■ CAUTION: For this test, compressed air at approx. 2 bar (29 p.s.i) and a testing device are needed.

Consisting of:

2 pressure gauges

1 orifice jet (inner diameter = 1 mm (.039 in.) / length = 3 mm (.12 in.)

1 connecting nipple M12x1.5
for the thread in the middle section of the turbocharger

1 cover plate for the oil outlet

n.B. connecting hoses

Procedure:

Screw in the connecting nipple and close the oil outlet with the cover plate.
Connect the pressure gauges together with the regulating valves.

d04356

Apply a constant pressure of 2 bar (29 p.s.i) to the connection cable.
The pressure drop must not exceed 50%.
(From 2 bar (29 p.s.i) to max. 1 bar (14.5 p.s.i))

◆ NOTE: For optimum results, the position of the shaft should always be changed slightly during the check, i.e. the shaft should be moved backwards and forwards in axial and radial directions.

Fig. 78-9

08462

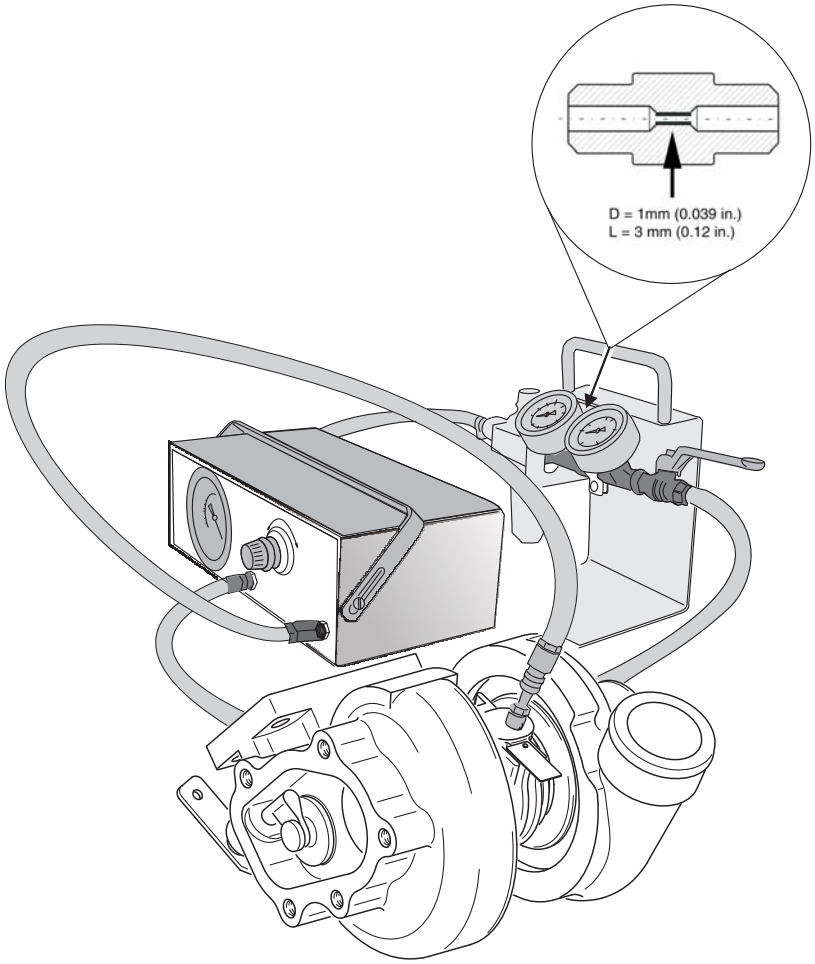

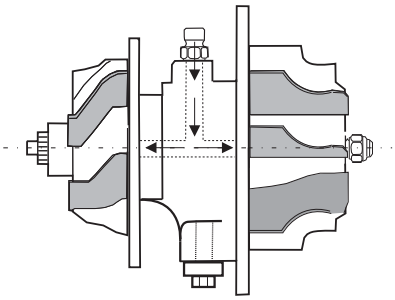

d04356

3.4) Assembly of the complete exhaust system (on the 912 Series)

■ CAUTION: For assembly, observe the exhaust system and aircraft manufacturers´ instructions.

3.5) Assembly of the complete exhaust system incl. turbocharger (on the 914 Series)

|| See Figs. 78-3, 78-10 and 78-11.

Turbocharger / turbocharger bracket / exhaust manifold

Release and remove the 3 upper hex. screws (20) M8x16 on the turbine housing, but only slacken the lower screw.

Place the turbocharger bracket (16) on the outer side of the retaining ring in position and loosely attach with the allen screws. Fit 4 studs (32) M8x19.5/13 with the longer threaded end (19.5 mm) (.76 in.) into turbine housing and tighten to 6 Nm (53 in.lb).

Screw stud (31) M8x30/13 into the top threaded bore (30) and tighten to 6 Nm (53 in.lb).

Attach muffler (12) with washers and M8 nuts (14) on turbine housing. Screw the support plate (15) onto the turbine housing with the washer and nut (14) M8. Attach turbocharger bracket (16) to the support plate with washer and hex. screw (13) M8x16 and tighten screw slightly.

Tighten muffler attachment nuts M8 to 25 Nm (18.5 ft.lb).

Fit the exhaust manifold (21) onto turbine housing using allen screws (22) M8x25 and tighten slightly with M8 nuts (23).

■ CAUTION: The attachment screws for exhaust manifold and turbocharger bracket are not tightened until installation on the engine is complete to prevent locking up of stresses.

Installation of the check valve. See 79-00-00.

d04356

Engine suspension frame / exhaust system assembly / exhaust bends

Screw the engine suspension frame (1) to the engine housing with the lock washers and the allen screw M10x110 (3) and M10x35 (4). See Fig. 71-10 and 71-11 in 71-00-00.

Place distance sleeve (29) 10.5/17/15 into left arm of engine suspension frame and attach exhaust bracket on engine housing (7) with washer, lock washer and allen screw (27) M10x50.

Re-establish attachment (28) exhaust bracket engine suspension frame (not supplied with engine). Tightening torque as specified by the fuselage manufacturer.

Place distance sleeve (10) 10.5/17/15 into right arm of engine suspension frame.

Screw turbocharger assembly to the holder (26) on the engine housing, complete with muffler and turbocharger bracket with washer, lock washer and allen screw (8) M10x50 and allen screw M8x50 (25). The muffler is attached to the exhaust bracket with the tension clamp (6) tightened to a torque of 15 Nm (133 in.lb).

■ CAUTION: Position tension clamp so that the tension free zone (33) comes to rest on the edge of the exhaust bracket. See Fig. 78-10.

Re-establish attachment (9) turbocharger bracket engine suspension frame (not supplied with engine). Tightening torque as specified by the aircraft manufacturer.

Fig. 78-10

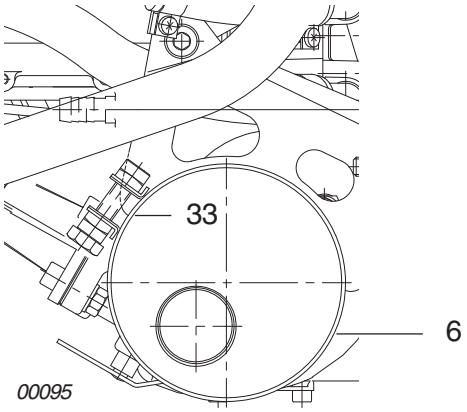

d04356

Tightening torque of the M10 screws = 40 Nm (30 ft.lb).

Reconnect the two oil lines for turbocharger on the oil pump.
See 79-00-00.

◆ NOTE: If the location of the oil line connection does not correspond with oil pump housing, correction can be achieved by slightly turning the turbocharger center section (34)

Fit the 4 exhaust bends (3).

◆ NOTE: To make assembly easier, LOCTITE Anti-Seize can be applied on the labyrinth end (36). See Fig. 78-11

The connecting ends (35) of the exhaust manifold must overlap the pleat of the labyrinth end by at least 5 mm (.197 in.) at each of the 4 exhaust bends. See Fig. 78-11

■ CAUTION: All 4 exhaust bends must be fitted free of stress and must not be damaged during installation.

After completion of installation as described, all the screw connections on the turbocharger bracket, exhaust manifold, exhaust bends

Fig. 78-11

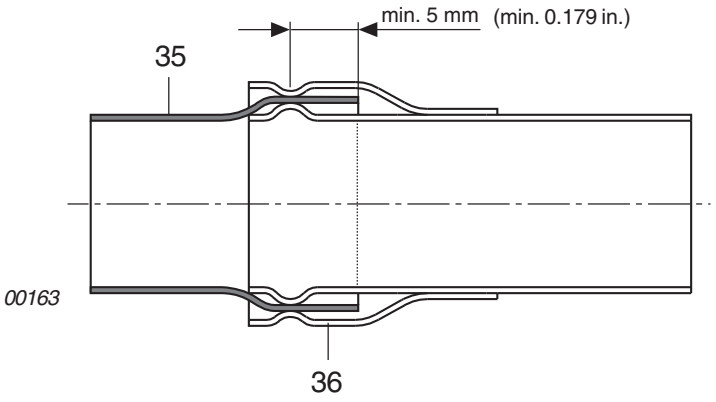

d04356

and the tension clamp must be tightened to the specified torques. See Fig. 78-3

Tightening torque:

Allen screws	(8)	M10x50	turbocharger bracket	40 Nm/ 30 ft.lb
Allen screws	(27)	M10x50	exhaust bracket	40 Nm/ 30 ft.lb
hex. screw	(6)	M10	tension clamp	20 Nm / 177 in.lb
hex. nuts	(1)	M8	exhaust bend flange	12 Nm / 106 in.lb

When tightening the exhaust bend flanges, ensure equal distance between flange and cylinder head from top to bottom. The flanges (2) of the exhaust bends (3) must not touch the cylinder heads. See Fig. 78-12

■ CAUTION: If the exhaust flange is deformed, it must be replaced.

After each disassembly, the lock nuts (1) must be replaced with new lock nuts M8.

■ CAUTION: In the high temperature zone of the turbocharger and exhaust system, use exclusively high grade, stainless steel screws.

3.6) Bowden cable, rope sheave and spring for wastegate control (on the 914 Series)

Fig. 78-12

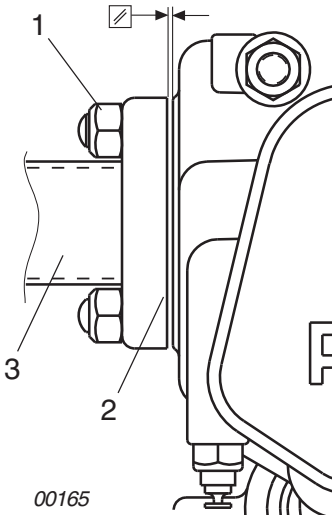

d04781

See Fig. 78-13

3.6.1) Disassembly

Remove tension spring (1) with a suitable tool and cut wire (2) of the Bowden cable.

Loosen set screw of nipple (3) and pull Bowden cable out of the cable retainer (4).

Do not lose the **pressure spring** (5) 5.5/1.2/16.9. Remove spring and store in a safe place.

Remove cotter pin (6) and pin (7) from wastegate lever (8).

Now the Bowden cable can be pulled out from the conduit.

If required, remove rope sheave (9) after removal of the allen screw (10) M5 x 20 along with lock washer and washer.

3.6.2) Checking of the components

Fig. 78-13

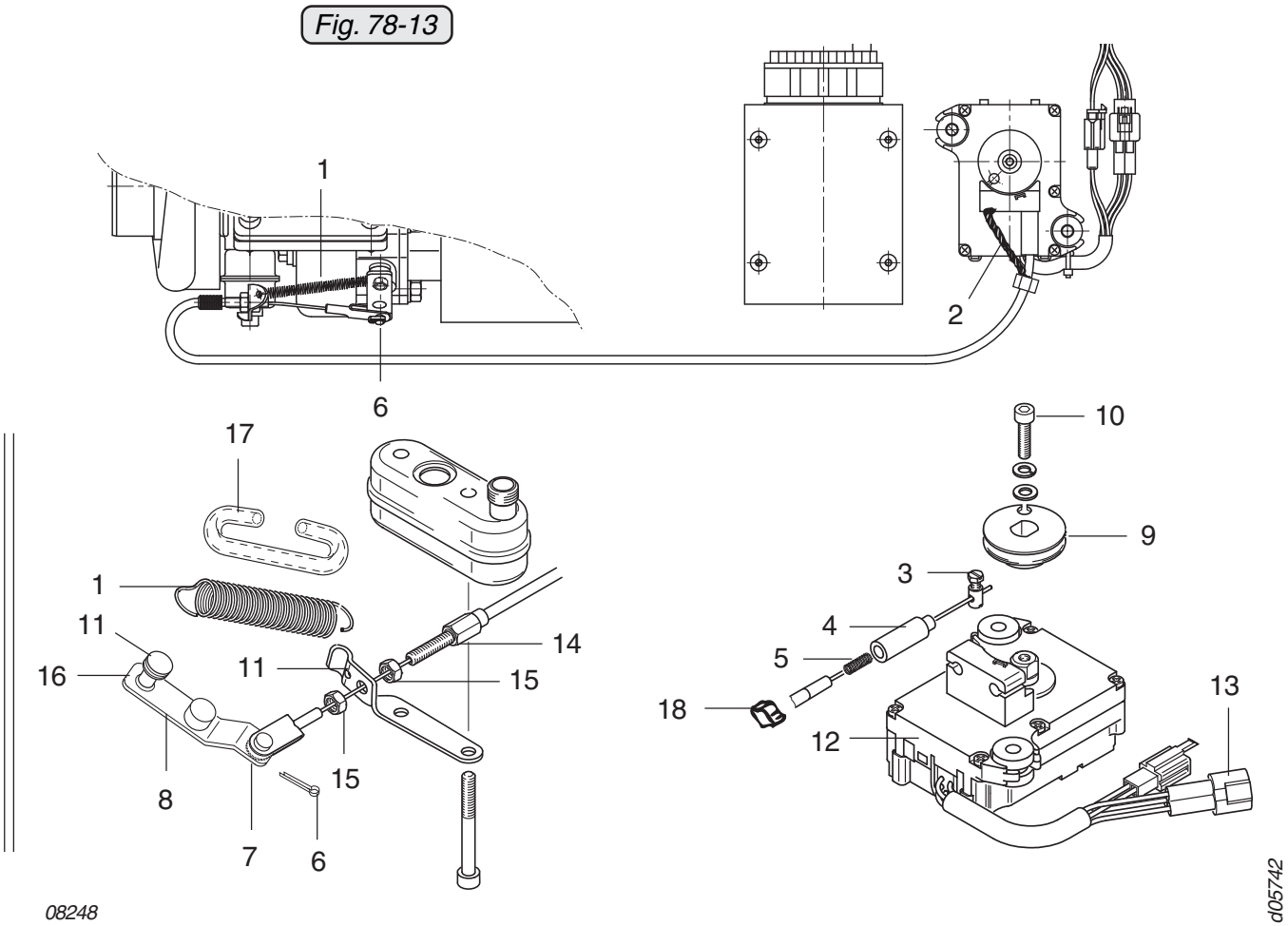

Visual inspection of all components. Check bowden cable for free movement.

■ CAUTION: Renew bowden cable if damaged. See the corresponding Maintenance Manual (Line Maintenance) for the respective engine type, 912 Series or 914 Series.

Check spring engagement holes (11) for wear.

■ CAUTION: On older engine versions, observe SB-914-008.

3.6.3) Assembly and adjustment

Ascertaining the position of the servo motor:

See Figs. 78-13 and 78-14.

To ascertain the servo motor position, power-up the TCU.

◆ NOTE: After the automatic self test of the servo motor (12), put the throttle lever into idle position to make sure that the servo motor will remain always in position with wastegate **„closed“**. The servo motor is self locking.

Position finding is absolutely necessary for correct adjustment of the Bowden cable.

While assembling the rope sheave, **interrupt the voltage supply to the TCU** or unplug the 2-pin plug connection (13). **Risk of destroying** the servo motor if it is activated by the TCU during assembly.

Fit rope sheave as per detail **A**, Fig. 78-9 and secure with washer, lock washer and allen screw M5x20 (10). The rope sheave has to be fixed to prevent rotating of the output shaft when the rope sheave is tightened. Tightening torque to 6 Nm (53 in.lb).

If the cable retainer has been removed at disassembly, apply LOCTITE 648 on cable retainer (4) and press it into servo motor housing.

d04356

Fit Bowden cable to wastegate lever with pin (7) and cotter pin (6).

Feed Bowden cable through flexible conduit (and integrated adjusting screw) (14). Using a suitable tool, fit suitable clamp (e.g. crimp clamp (18)) for traction relief as shown in Fig. 78-13. Insert pressure spring (5) in cable retainer (4), thread Bowden cable through and around the rope sheave and fix with a screw nipple (3) with a tightening torque of 2.5 Nm (22.1 in.lb).

Adjust Bowden cable with M6 hex. nuts (15) so that no clearance is perceptible on wastegate lever.

With this adjustment set, pre-tension the pressure spring by 1 to 2 mm (0.04 - 0.08 in.) at straightened cable with the adjustment screw at support.

Insert silicon hose 5x8 (17), length approx. 125 mm (4.92 in.), into the spring.

Engage return spring on support and spring pin (16).

■ CAUTION: To minimize wear on spring engagement holes, engage spring on spring pin, twist it by approx. one turn and engage other end of spring on support.

Secure safety wiring (2) between servo motor and traction relief so that the Bowden cable cannot escape from the cable retainer and consequently change the setting during operation.

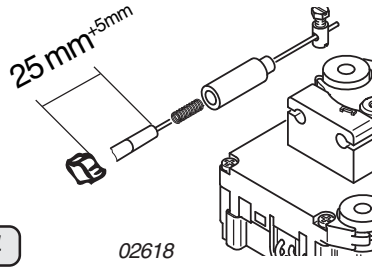

Fig. 78-14

d04356

4.) Wear limits

08473

Description	Code	Reading new		wear limit	wear limit		Readings
		min	max	100%	50%		
Turbocharger							
Axial clearance	TC01			**0,025** 0,0010 **to** **0,084** 0,0033	**0,040** 0,0016 **to** **0,070** 0,0028	**actual**	
						renewed	
Radial clearance	TC02			**0,056** 0,0022 **to** **0,127** 0,0050	**0,074** 0,0029 **to** **0,109** 0,0043	**actual**	
						renewed	
Rework turbine housing flange	TC03			**0,5** 0,0200		**actual**	
						renewed	

d05742

NOTES

SECTION 79

LUBRICATION SYSTEM

1) Table of contents

SECTION 79
LUBRICATION SYSTEM

1) Table of contents ..... 79-00-00 / 1
2) Systems description ..... 79-00-00 / 3
- 2.1) Lubrication system ..... 79-00-00 / 3
- 2.2) Main oil pump (Engine lubrication circuit) ..... 79-00-00 / 5
- 2.3) Suction pump (turbocharger oil circuit, only on 914 Series) ..... 79-00-00 / 8
- 2.4) Magnetic plug ..... 79-00-00 / 10
- 2.5) Drain plug ..... 79-00-00 / 10
- 2.6) Connections for instrumentation ..... 79-00-00 / 10
  - 2.6.1) Oil pressure indication ..... 79-00-00 / 10
  - 2.6.2) Oil temperature indication ..... 79-00-00 / 10

3) Maintenance ..... 79-00-00 / 11
- 3.1) Oil pump ..... 79-00-00 / 11
  - 3.1.1) Oil pump removal (main and suction pump) ..... 79-00-00 / 11
  - 3.1.2) Oil pump disassembly ..... 79-00-00 / 14
  - 3.1.3) Oil pump checking ..... 79-00-00 / 15
  - 3.1.4) Oil pump assembly (on 912 Series) ..... 79-00-00 / 18
  - 3.1.5) Oil pump assembly (on 914 Series) ..... 79-00-00 / 19
- 3.2) Pressure check valve (only on 914 Series) ..... 79-00-00 / 20
- 3.3) Oil sump (only on 914 Series) ..... 79-00-00 / 21
- 3.4) Oil tank ..... 79-00-00 / 22
- 3.5) Oil lines (steel lines) ..... 79-00-00 / 23
- 3.6) Oil lines ..... 79-00-00 / 25
- 3.7) Oil cooler ..... 79-00-00 / 25
- 3.8) Purging of lubrication system ..... 79-00-00 / 26
- 3.9) Temperature- and pressure observation ..... 79-00-00 / 26
  - 3.9.1) Oil temperature sensor ..... 79-00-00 / 26
  - 3.9.2) Oil pressure sensor ..... 79-00-00 / 27

4) Wear limits ..... 79-00-00 / 32

d05743

NOTES

d02628

2) Systems description

2.1) Lubrication system

See Figs. 79-1 and 79-2.

ROTAX engine types of the 912/914 Series are equipped with a dry sump forced lubrication and a main oil pump with integrated pressure regulator. The ROTAX 914 Series has an additional suction pump for the turbocharger oil circuit.

◆ NOTE: The oil pumps are driven by the camshaft.

The **main oil pump** sucks the engine oil from the oil tank (1) via the oil cooler (2) and forces it through the oil filter to the individual points of lubrication (lubricates also the bearings of the turbocharger and the propeller governor).

The surplus engine oil emerging from the points of lubrication accumulates on the bottom of the crankcase and is forced back to the oil tank by the blow-by gases.

◆ NOTE: The oil temperature sensor (6) is located on the oil pump flange and measures the oil feed temperature.

The oil circuit is vented via bore (5) in the oil tank, where the blow-by gases leave the system.

On engines of the 914 Series, the turbocharger is lubricated via a separate oil line (3) from the main oil pump.

The oil emerging from the turbocharger collects in the oil sump and is pumped back to the oil tank by a separate **suction pump** via the oil line (4).

d02628

912 Series

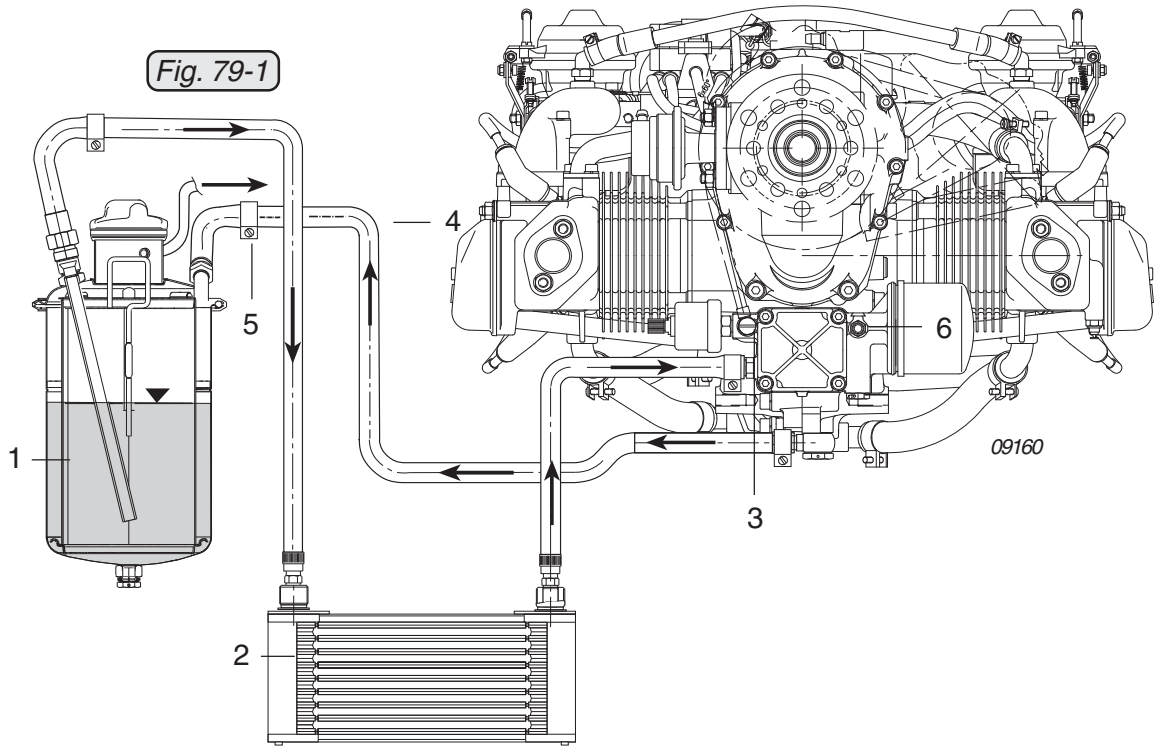

914 Series

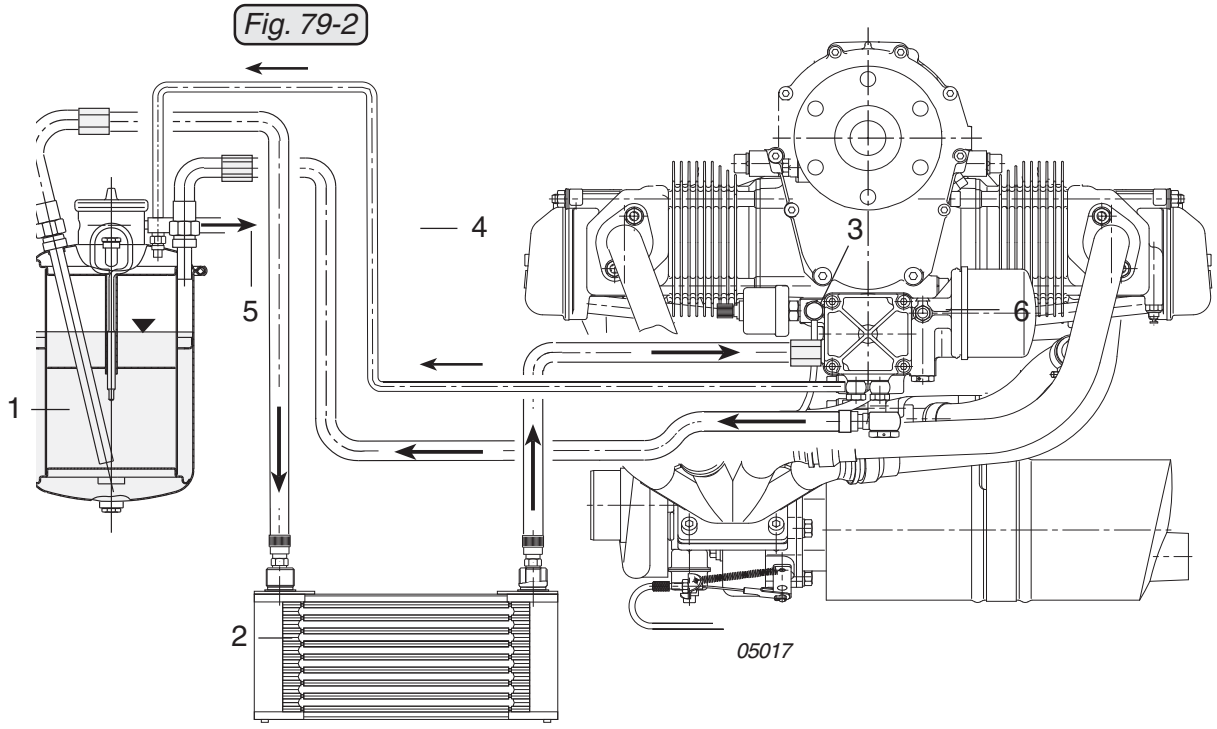

d02628

2.2) Main oil pump (Engine lubrication circuit)

See Fig. 79-3

The trochoid oil pump sucks the engine oil out of the oil tank (1) via line (2). The oil passes through the oil cooler (3) fitted on the suction side via the oil line (4) to the oil pump rotor (5) **(main oil pump)**, which is driven by the oil pump shaft (6).

The pump forces the oil through the filter mat from the outside to the inside of the oil filter (7). The oil pressure from 1.5 to 5 bar (22 to 72 p.s.i.) is controlled by the pressure relief valve (8). The surplus oil returns to the oil pump rotor via the channel (9).

If the filter mat in the oil filter is completely clogged up, the pressure relief valve (10) will open and lube oil will flow unfiltered to the individual lubrication points. Prevent this situation by all means, using lube oil and filter as specified and carrying out punctual replacement of oil filter.

The oil will then be pumped through the oil duct (11) in the left side of the housing. The 4 hydraulic valve tappets (12) for cylinders 2 and 4 are supplied with oil via this channel. Oil flows to the rocker arm bearing via the hollow push-rod (13) and the oil duct (14). The oil emerging from bore (15) lubricates the valve mechanism and flows through the oil return line (16), into the channel (17) and back to the crankcase.

Forced oil supply from oil duct (11) is also supplied to camshaft bearing (18) CC23, main bearing (19) CC13, the conrod bearing (20) of cylinder 4 and the bronze bush (21) of the backing bearing IH01 in the ignition housing.

In the crankcase sealing surface (22), the oil enters the right crankcase half. As a result, the camshaft bearing (24) CC22, the middle main bearing (25) CC12 and the two conrod bearings (26) and (27) of cylinders 3 and 2 are lubricated via the oil duct (23). This oil duct supplies the hydraulic valve tappets and the valve mechanism of cylinders 1 and 3.

The forced oil supply then reaches the camshaft bearing (28) CC21, the main bearing (29) CC11, the conrod bearing (30) of cylinder 1 and the backing bearing (31) GB01 in the gearbox housing. The electrical connection of the oil pressure gauge is at the oil pressure sensor (32) .

d02628

On the ROTAX 912/914 Series, which is equipped with a hydraulic governor, the governor (35) is supplied with the required forced oil via oil line (33). From the governor flange (34), the oil flows to the gear pump in the governor, which raises the pressure to approx. 23 bar (330 p.s.i.). According to the lever position of the governor, oil is pumped via oil duct (36) and through oil inlet flange (37) and into the hollow propeller shaft (38) to the variable pitch propeller or drained into the crankcase through channel (39), thus changing pitch accordingly. The surplus oil returns back to the crankcase via the duct.

The engine oil emerging from all lubrication points flows to the bottom of the crankcase (40) and is pressed back into the oil tank by the crankcase gases (blow-by – gases) via the ring hose nipple (41) and the oil return line (42). The tangential feed of the returned oil effects separation of oil from air via the screen (43). As a result, the intake system (2) is supplied with oil which is to a large extent free of air.

The oil tank is vented via the connection (44) into a suitable container or to the outside.

For oil change, the oil is drained by removing drain plug (45).

◆ NOTE: Only on 914 Series: Oil pump rotor (46) of the **suction oil pump.**

d04782

912 Series
914 Series

Fig. *79-3*

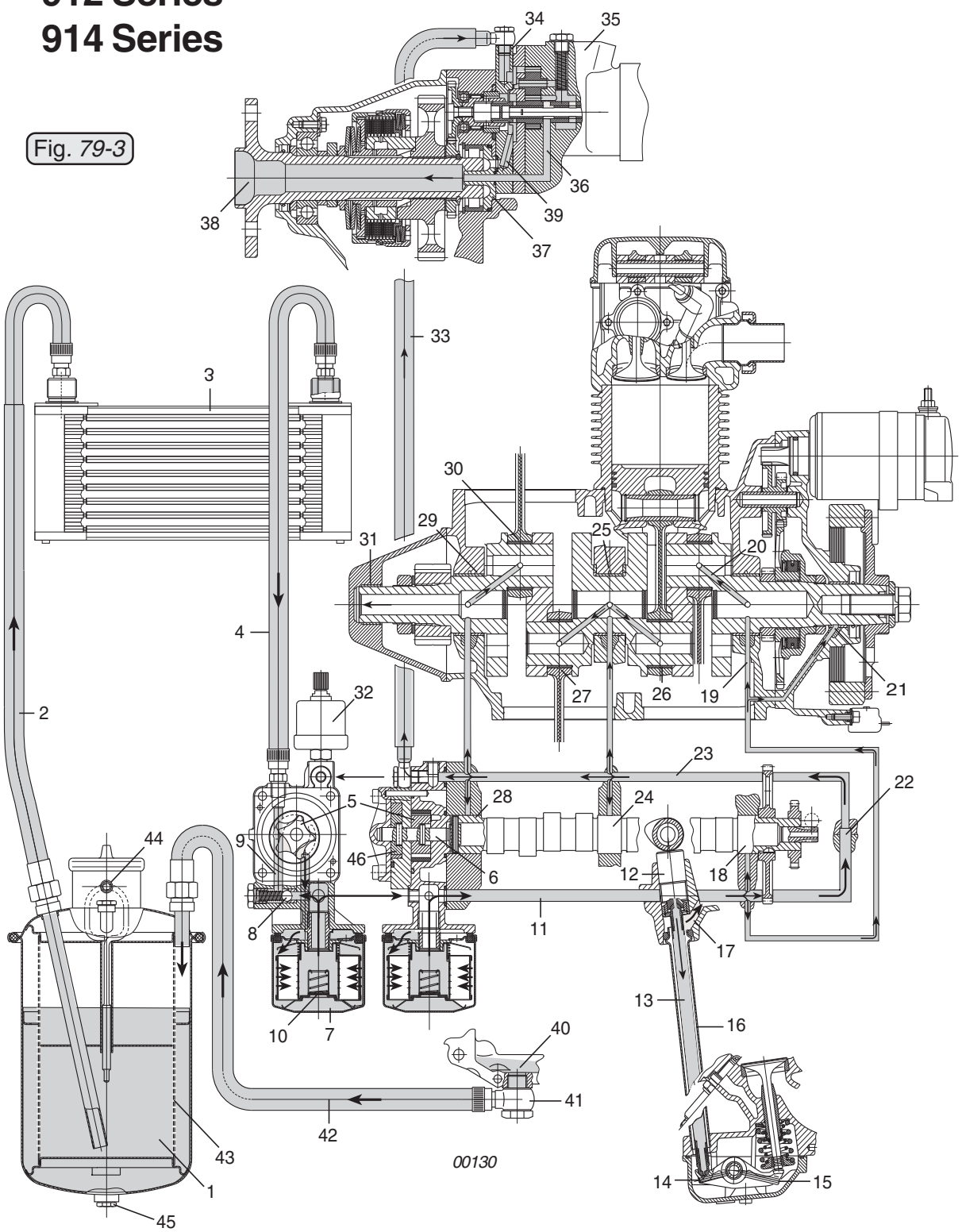

d02628

2.3) Suction pump (turbocharger oil circuit, only on 914 Series)

See Fig. 79-4

The suction pump (11) is of the same design as the main oil pump (12) and sits on the extended common pump shaft (15).

The lubrication of the turbocharger shaft, which is supported on plain bearings, is via a separate oil line (2) from the main oil pump.

The choke valve (3) on the entry into the turbocharger housing prevents flooding of the turbocharger (1) with engine oil by gravity after engine stop.

Operation of the pressure valve:

Oil pressure (min. 0.8 bar (11.6 p.s.i.)) keeps the ball valve open against the low spring pressure and the oil flows almost unhindered to the bearing bore. Without oil pressure the valve closes and stops the oil flow.

■ CAUTION: Oil loss combined with heavy smoke emission at engine start is a strong indication of a defective check valve.

The oil emerging from the bearing bore collects in the oil sump (8). From there, it is sucked off by the suction pump (11) via a separate line (9) and pumped back to the oil tank via the ring hose nipple (10).

◆ NOTE: The suction pump is also a trochoid pump and, like the main oil pump (12), is driven by the common oil pump shaft.

d04782

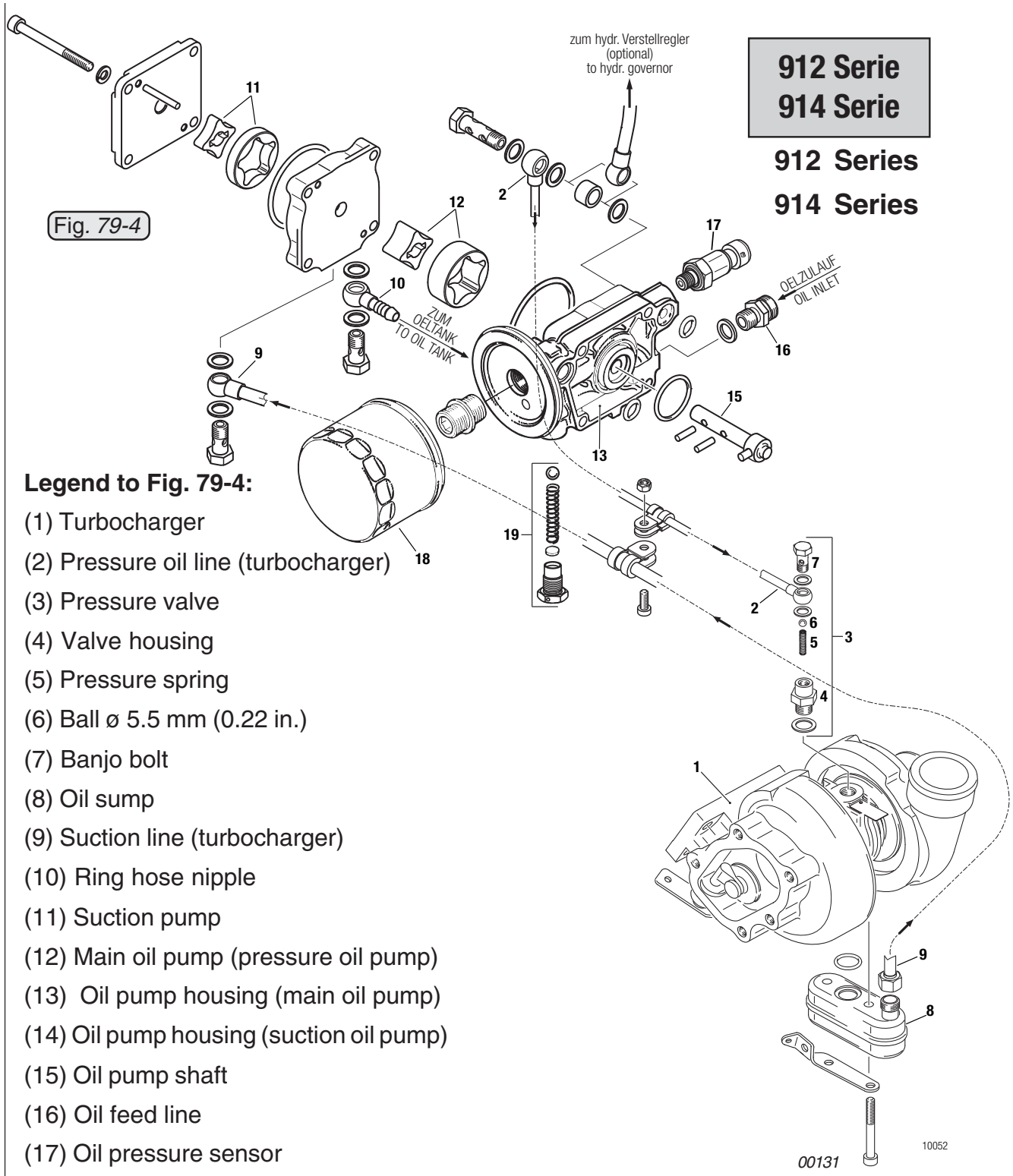

Legend to Fig. 79-4:

(1) Turbocharger
(2) Pressure oil line (turbocharger)
(3) Pressure valve
(4) Valve housing
(5) Pressure spring
(6) Ball ø 5.5 mm (0.22 in.)
(7) Banjo bolt
(8) Oil sump
(9) Suction line (turbocharger)
(10) Ring hose nipple
(11) Suction pump
(12) Main oil pump (pressure oil pump)
(13) Oil pump housing (main oil pump)
(14) Oil pump housing (suction oil pump)
(15) Oil pump shaft
(16) Oil feed line
(17) Oil pressure sensor
(18) Oil filter
(19) Pressure relief valve

d05743

2.4) Magnetic plug

See the corresponding Maintenance Manual (Line Maintenance) for the respective engine type, 912 Series or 914 Series.

◆ NOTE: It is possible to repair the thread of the magnet plug of the crankcase with a helicoil. See section 8.7 of the overhaul manual.

2.5) Drain plug

See the corresponding Maintenance Manual (Line Maintenance) for the respective engine type, 912 Series or 914 Series.

2.6) Connections for instrumentation

■ CAUTION: Consult also the relevant section in the Installation Manual.

2.6.1) Oil pressure indication

Via an electric resistance pick-up attached on oil pump housing with connection to indicating instrument.

2.6.2) Oil temperature indication

The sensor for the oil temperature is fitted in the oil pump housing. The sensor is a thermo switch with changing internal resistance according to oil temperature.

d04782

3) Maintenance

The following sections describe maintenance procedure for engines of the 912/914 Series above and beyond the maintenance and special checks, see corresponding Maintenance Manual (Line Maintenance) for the respective engine type, 912 Series or 914 Series, and the systems descriptions given hitherto. The description is subdivided into subsections and descriptions of the function of the various systems.

3.1) Oil pump

3.1.1) Oil pump removal (main and suction pump)

See Figs. 79-5 and 79-6.

Drain oil.

Remove oil line from screw socket (11,13,14) (feed). Remove both banjo bolts (36) from the suction pump and remove sealing rings (28).

◆ NOTE: The suction oil line (34) and the ring hose nipple (35) need not be removed.

Remove banjo bolt (36) and take off sealing rings (28). Also remove the distance sleeve (31) (configuration 2 / 4). On configuration 3, the pressure oil line (30) to the governor should be removed for easier disassembly. Same procedure on pressure oil line (32) to the turbo-charger.

Remove oil filter (8) with oil filter wrench, part no. 877620

Release 4 allen screws (27) (on 912 Series: M6x50 on 914 Series: M6x65) with lock washers and take off complete oil pump unit with 2x O-rings (25) 11x2.7 and (24) 1 x 30x2.5.

◆ NOTE: Suction pump only on ROTAX 914 Series!

d05743

Fig. 79-5

912 Serie
912 series

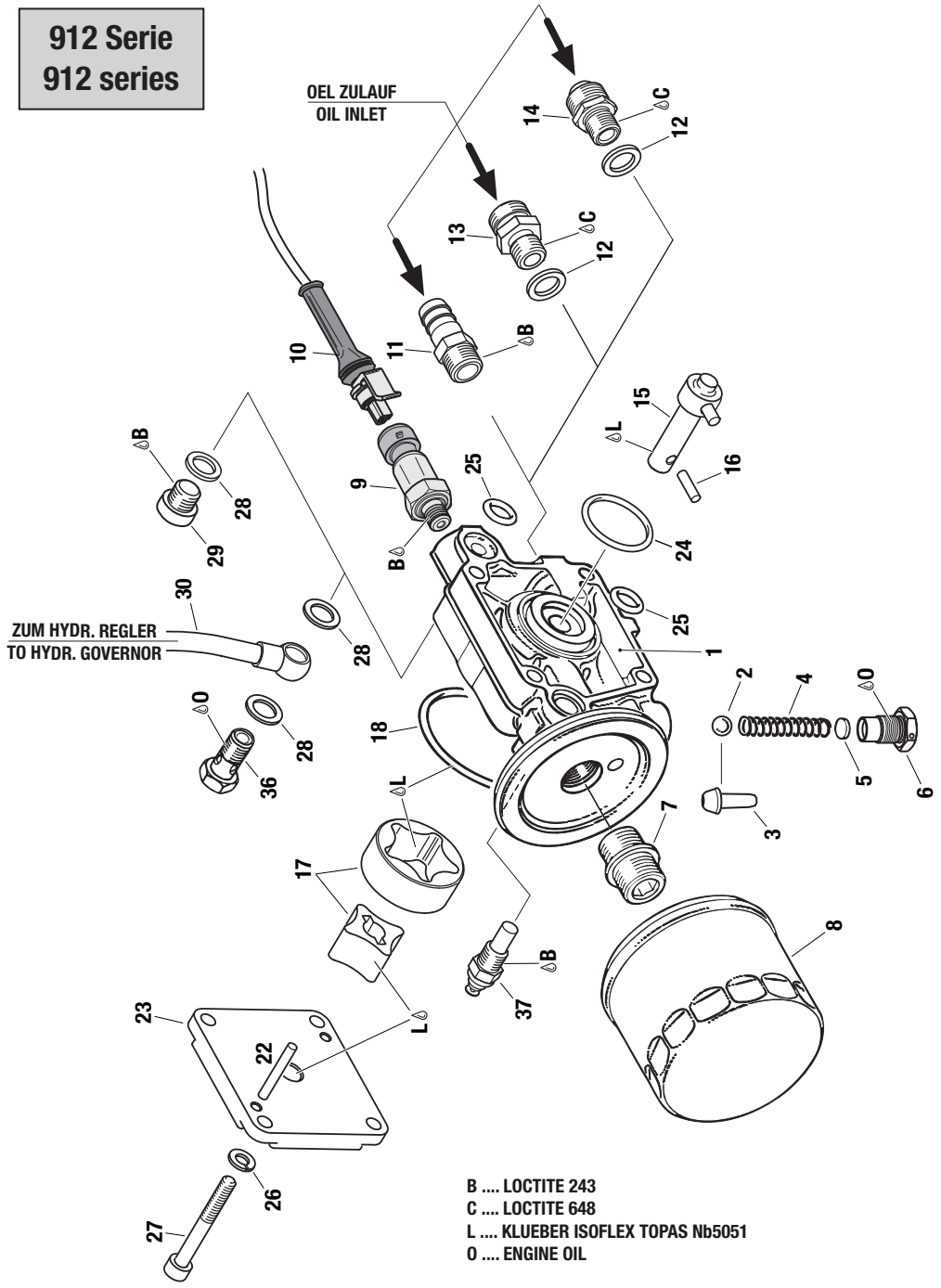

d05743

Fig. 79-6

914 Serie
914 series

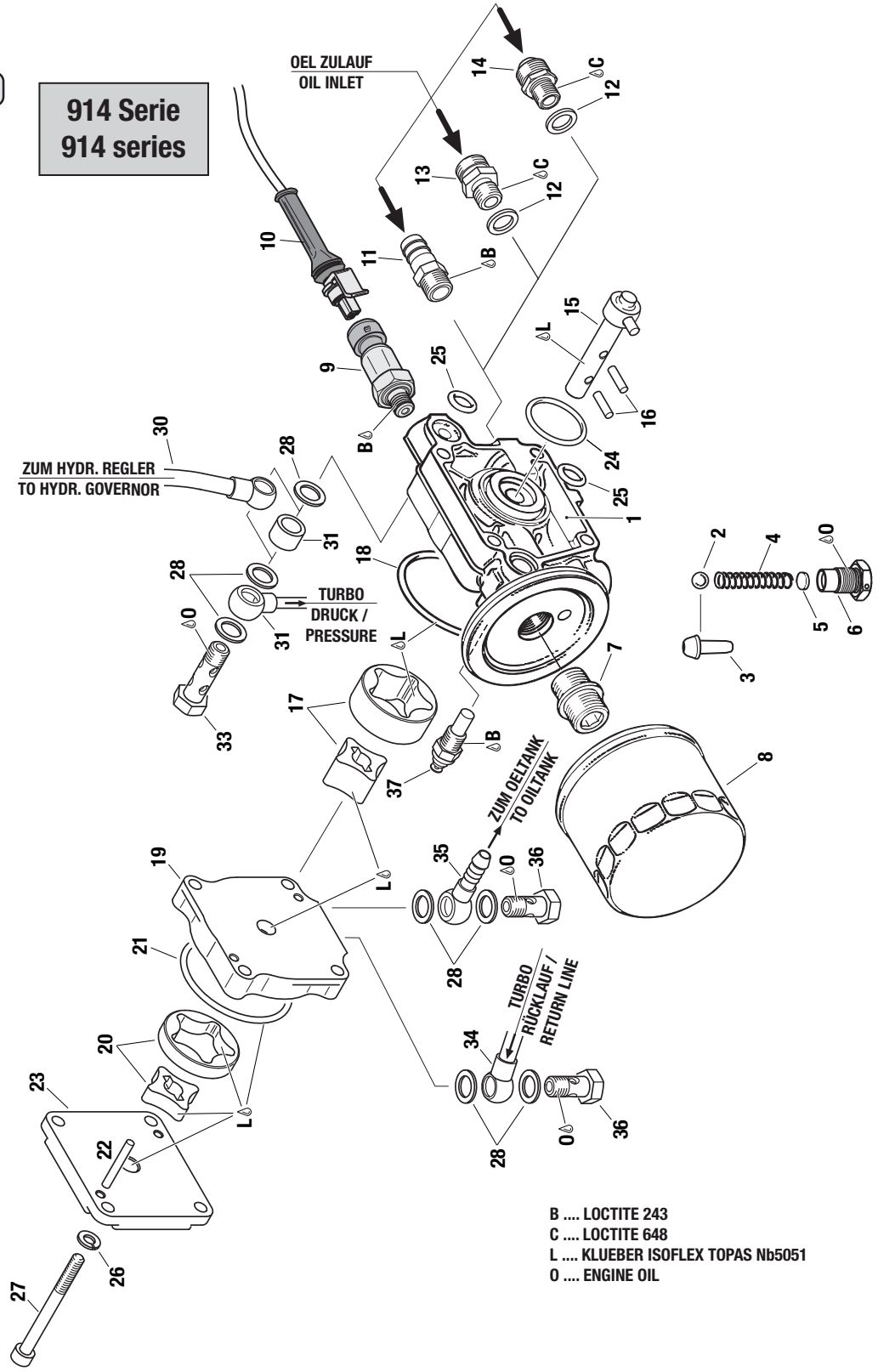

3.1.2) Oil pump disassembly

See Figs. 79-5 and 79-6.

◆ NOTE: The oil filter nipple (7), screw socket M18x1.5/M14x1.5 (11,13,14), oil temperature sensor (37) and oil pressure sensor (8) are only removed if required, e.g. in the event of damage or for cleaning.

Remove screw plug (6), adjusting shim (5), pressure spring (4) and ball 8.5 mm (0.33 in.) (2) of oil pressure release valve.

◆ NOTE: The adjusting shim is only fitted if required to reach the specified oil pressure.

On the 912 Series:

Remove the oil pump cover (23), needle pins (22), pressure inner and outer rotor (17) and O-ring 46x3 (18). Take out needle pin (16) and pull out oil pump shaft (15) with pressed in drive pin.

On the 914 Series:

Remove the suction pump cover (23), needle pins (22), suction inner and outer rotor (20) and O-ring 46x3 (21). Take out needle pin (16) .

Remove oil pump housing (19) of the suction pump, pressure inner and outer rotor (17) and O-ring 57x3 25G (18) of main oil pump.

Take out last needle pin (16) and pull out oil pump shaft (15) with pressed in drive pin.

◆ NOTE: Only on 914 Series:
Suction inner and outer rotor (20), O-ring (21) 46x3, needle pin (18) and oil pump housing (19).

d05743

3.1.3) Oil pump checking

See Figs. 79-7, 79-8, 3179-9, 79-10, 79-11, 79-12 and 79-13.

Visually check all components of oil pump.

Check inside (1) of oil pump cover with a straightedge (2) for wear.

Check all revolving rotors of pump. If there are noticeable furrows on mating faces of rotor inside (3) and revolving piston outside (4), replace both components.

Insert revolving pistons and rotors into their respective housings.

Only on 914 Series:
Check the gap dimension (OP01) (**suction oil pump**) between
crankcase flange surface — revolving piston
crankcase flange surface — pump rotor

Also check the gap dimension (OP01) (**main oil pump**) between
crankcase flange surface (5) — revolving piston (6)
crankcase flange surface (5) — pump rotor (7)

See 79-00-00 sec. 4.

A bigger gap greatly reduces pump capacity.

Check sealing surfaces of both oil pump housings and pump cover, re-surface on an even surface plate if necessary.

Check pump shaft at the bearing bores (8).

◆ NOTE: If there is still an older model oil pump shaft fitted on engines 912 A and 912 UL (identifiable by the roll pin on the pump shaft) the shaft must be replaced in accordance with SB-912-032 “Replacement of oil pump assy. or oil pump shaft assy“, latest issue.

Remove screw plug (9), pressure spring (10) and ball (11), clean and check ball seat (12) in pump housing. The compensating shim (13) is only fitted if required to reach specified oil pressure.

Clean all parts and clear oil bores with compressed air.

d02628

912 Series

On new engine models

Fig. 79-7

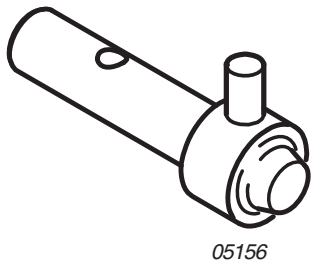

912 Series

On older engine models

Fig. 79-8

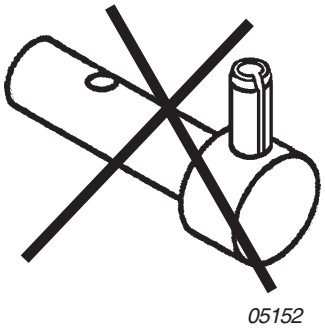

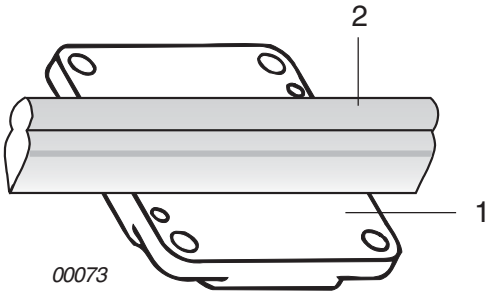

Fig. 79-9

914 Series

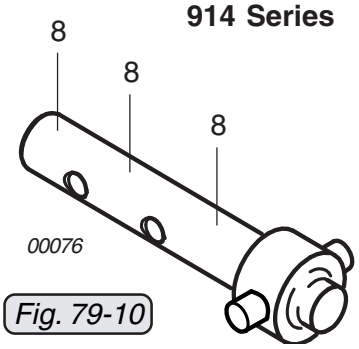

Fig. 79-10

d02628

Fig. 79-11

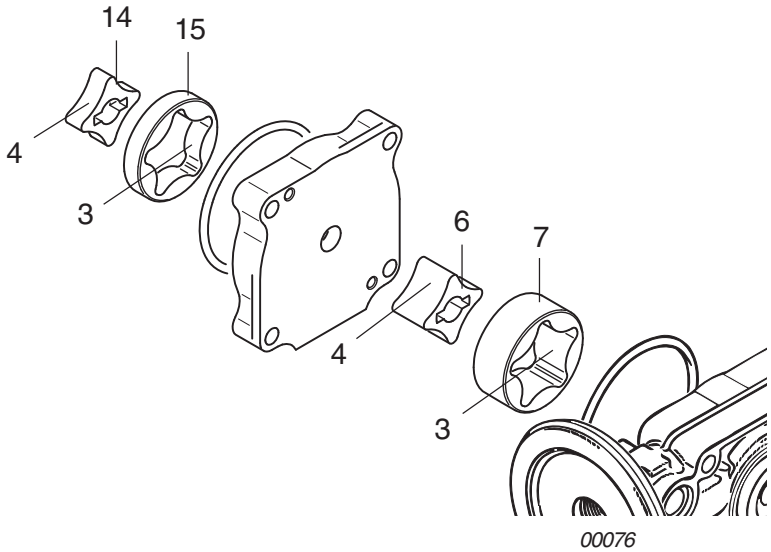

Fig. 79-12

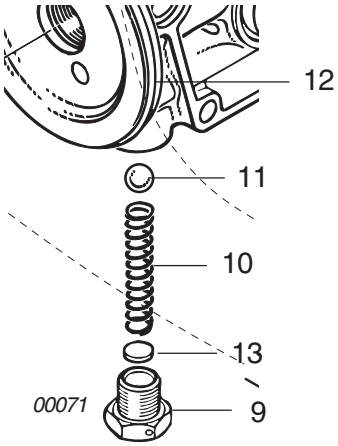

Fig. 79-13

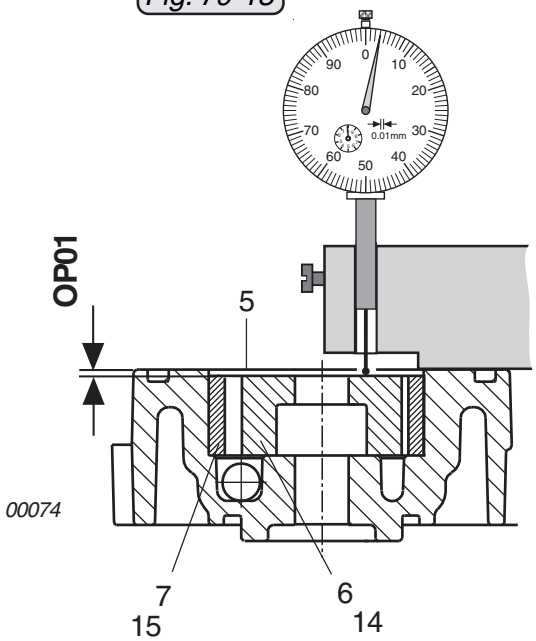

d02628

3.1.4) Oil pump assembly (on 912 Series)

See Fig. 79-5

Lubricate bearing bore for pump shaft in oil pump housing with engine oil and install pump shaft (15). Push needle pin (16) 4x15.8 into the pump shaft (15), insert suction inner and outer rotor (17) and turn the pump shaft to check it. Fit the 2 outer O-rings (25) 11-2.7 and O-ring (24) 30-2.5 in the oil pump housing and fit it to the crankcase.

◆ NOTE: Turn oil pump shaft so that the drive pin engages in the groove of the camshaft.

◆ NOTE: Models from the year 1995 onwards have a suction inner and outer rotor of height 16 mm (0.63 in.) instead of 13 mm (0.51 in.).

◆ NOTE: Apply LOCTITE 5910 to the crankcase in the area of the split line between the two crankcase halves.

Push both needle pins (22) 4x15.8 into the pump housing, insert O-ring (18) 57-3 and tighten oil pump cover (23) crosswise by hand evenly with allen screws (27) M6x50 and lock washers. After this tighten allen screws (27) crosswise. Tightening torque 10 Nm (90 in.lb).

Fit ball 8.5 mm (0.33 in.) (2), pressure spring (4) 39.5 mm (1.55 in.) and screw plug (6) M12x1 and secure with wire. Tightening torque with oiled thread 15 Nm (133 in.lb).

◆ NOTE: The adjusting shim (5) is not supplied as standard equipment. It is only fitted if a test run reveals that the oil pressure is too low.

If the oil filter nipple (7) has been removed, retighten to 60 Nm (44.3 ft.lb). Slightly lubricate the rubber seal for oil filter (8) with engine oil. Screw oil filter on by hand until it touches the oil filter housing. Then tighten by an extra 3/4 turn.

◆ NOTE: Depending on the model, a hose nipple or a screw socket for either a metric connection or a UNF thread is installed.

Tighten the ring hose nipple with 15 Nm (133 in.lb). In the case of a model with a screw socket tighten with 25 Nm (18.5 ft.lb). Tighten oil temperature sensor (37) with LOCTITE 243 and a torque of 7 Nm (62 in.lb). Grease the thread of the banjo bolt (36) and tighten with 12 Nm (105 in.lb). Apply LOCTITE 243 on plug screw (29) and tighten with a torque of 10 Nm (90 in.lb).

d05743

3.1.5) Oil pump assembly (on 914 Series)

See Fig. 79-6

Lubricate bearing bore for pump shaft in oil pump housing with engine oil and install pump shaft (15).

Push needle pin (16) 4x15.8 into the pump shaft, insert oil pump piston with rotor (17) in main oil pump and turn pump shaft to check it.

Insert O-ring (18) 57-3 and push on oil pump housing (19), push second needle pin (16) 4x15.8 into the pump shaft, insert suction inner and outer rotor (28) of the suction pump. Rotate the pump shaft again to check it.

◆ NOTE: Apply LOCTITE 5910 to the crankcase in the area of the split line between the two crankcase halves.

Push both needle pins (22) 4x29.8 through the two pump housings and insert O-ring (21) 46-3. Fit the 2 outer O-rings (25) 11-2.7 and O-ring (24) 30-2.5 in the oil pump housing and fit it to the crankcase.

◆ NOTE: Turn oil pump shaft until the drive pin engages in the camshaft. Tighten oil pump cover (23) crosswise and by hand evenly with allen screws (27) M6x65 and lock washers. After this tighten allen screws (27) crosswise. Tightening torque with oiled thread 10 Nm (90 in.lb).

Fit ball 8.5 mm (0.33 in.) (2), pressure spring (4) 39.5 mm (1.55 in.) long and screw plug (6) M12x1. Tighten oiled thread with a torque of 15 Nm (133 in.lb).

■ CAUTION: The adjusting shim (5) is not supplied as standard equipment. It is only fitted if a test run reveals that the oil pressure is too low.

If the oil filter nipple (7) has been removed, retighten it to 60 Nm (44.3 ft.lb). Slightly lubricate the rubber seal for oil filter (8) with engine oil. Screw on oil filter by hand until it touches the oil filter housing. Then tighten oil filter by an extra 3/4 turn.

◆ NOTE: Depending on the model a hose nipple or a screw socket for either a metric connection or a UNF thread is installed.

d05743

Tighten the ring hose nipple with 15 Nm (133 in.lb). In the case of a model with a screw socket tighten with 25 Nm (18.5 ft.lb). Tighten oil temperature sensor (36) with LOCTITE 243 and a torque of 7 Nm (62 in.lb).

Also fit oil pressure sensor (9) secured with LOCTITE 243. Tightening torque 15 Nm (133 in.lb). Grease the threads of the banjo bolts (33) and (36) and tighten with 12 Nm (106 in.lb).

3.2) Pressure check valve (only on 914 Series)

See Fig. 79-14.

Remove banjo bolt (1) M8 with sealing rings (2) 8x13.

◆ NOTE: The valve housing (3) is only removed in the event of damage or for cleaning.

Remove ball (4) 5.5 and pressure spring (5), 22 mm long, from the valve housing.

◆ NOTE: The banjo bolt together with the ball and spring serve as a pressure check valve. For further information, see 79-00-00 sec. 2.3. At present it is possible to control the pressure check valvue by testing for an opening pressure (via oil) of 0.4 bar (+/- 0.05)

Clean all components and inspect them visually.

Also check thread and flange surface of turbocharger housing.

If there is leakage at the valve seat (6), it can be reworked with valve lapping paste or other suitable method. If necessary, replace banjo bolt.

Reassembly in reverse order.

Screw valve housing (3) with sealing ring (7) 12x18 into turbocharger housing and tighten to 25 Nm (18.5 ft.lb).

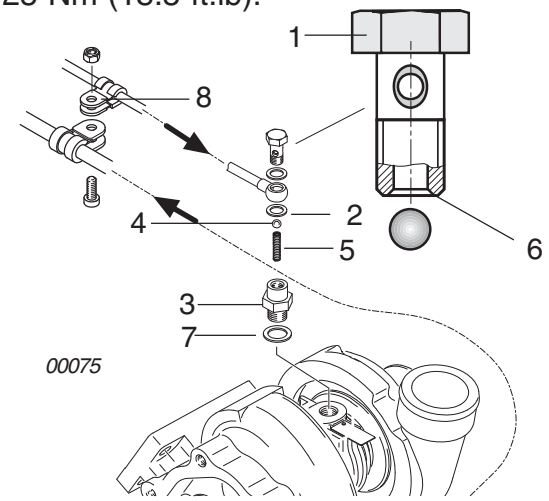

Fig. 79-14

d05743

■ CAUTION: If the ball (4) installed under the pressure spring (5), the oil circuit is interrupted and the turbocharger will be destroyed.

Insert pressure spring (5) and ball (4).

The pressure oil line (8) is attached with the banjo bolt (1) and sealing rings (2) on both sides. Tightening torque 10 Nm (90 in.lb).

◆ NOTE: For recognition the banjo bolt is either marked with a blue color or reads the label “OIL”.

3.3) Oil sump (only on 914 Series)

See Fig. 79-15

◆ NOTE: The oil sump (1) is only removed in the event of damage or for cleaning.

Remove tension spring from wastegate flap with a suitable tool.

Release collar nut (2) of the turbo oil suction line (3). Remove the 2 allen screws (4) M6x55 and take off cable support (5), oil sump (1) and O-ring (6) 9x2.3.

Clean all components and check them visually. Also check thread and flange surface of turbo charger housing. In the event of damage, replace oil sump.

Reassembly in reverse order.

The oil sump (1) is attached with the O-ring (6), cable support (5) and 2 allen screws (4) M6x55.

Tighten collar nut (2) of the turbo oil suction line to 20 Nm (180 in.lb).

Secure the allen screws (4) with wire.

Fig. 79-15

00075

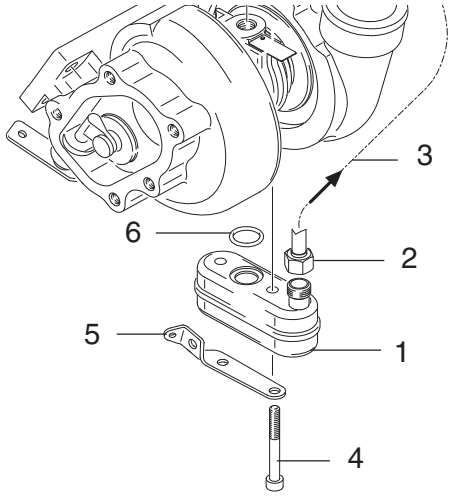

d04782

3.4) Oil tank

See Fig. 79-19

Detach oil lines. Remove banjo bolt (1) M10 and remove ring hose nipple (2) with sealing rings 10x14.

See latest Maintenance Manual "Line Maintenance“ for the respective engine type.

Fig. 79-16

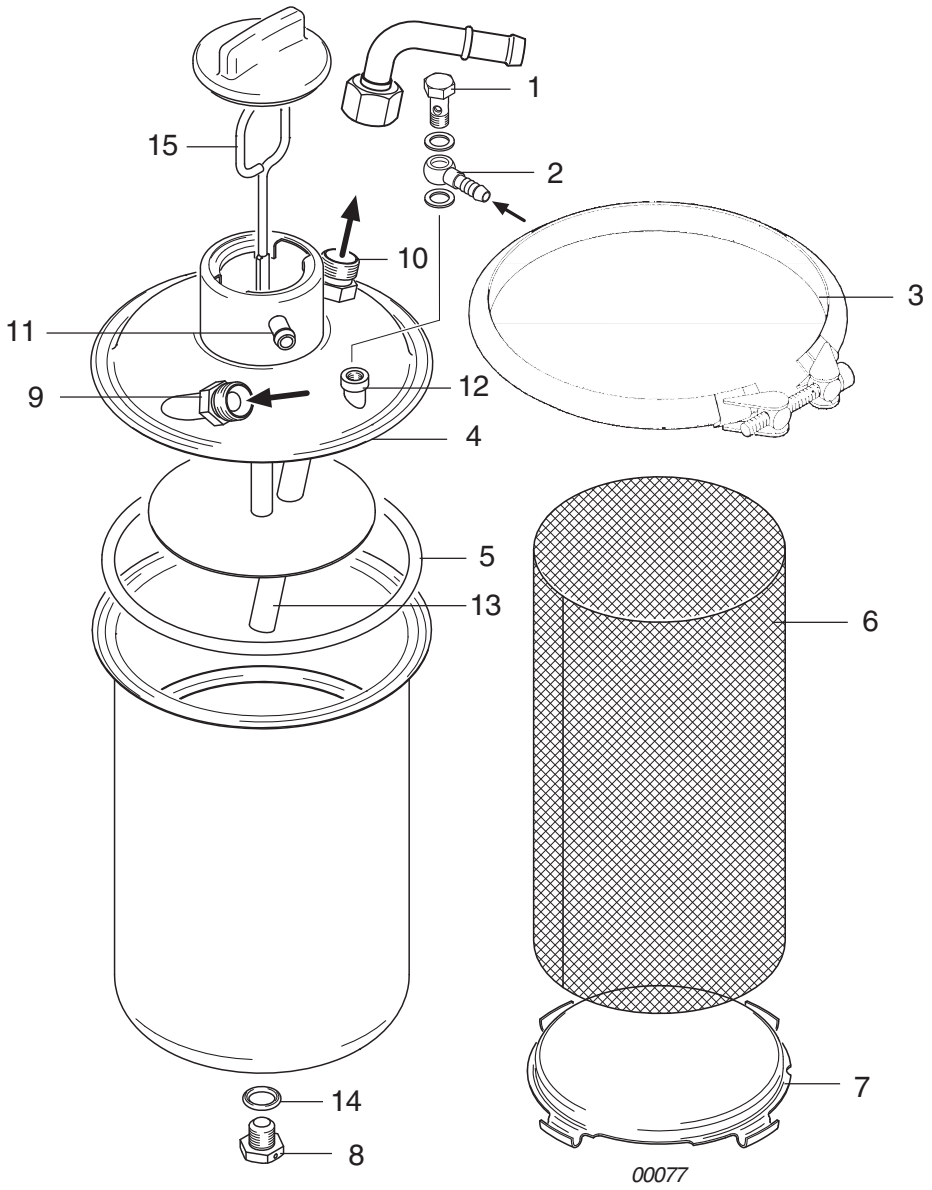

3.5) Oil lines (steel lines)

See Figs. 79-17 and 79-18.

The steel oil lines are only removed in the event of damage or for cleaning.

- **Governor pressure oil line** (1) **to hydr. governor disassembly**

  Remove the cable clamp (2) for cable support from the side of the gearbox.

  Remove banjo bolt (3) M10 with sealing rings from governor flange. Then release the banjo bolt (4) on the oil pump housing and take off the 3 sealing rings.

- **Turbo pressure oil line** (5) **(only on 914 Series) disassembly**

◆ NOTE: The turbo pressure and the suction oil line are attached together by means of two cable clamps (6) ø 8/M5 and 2 cable lamps (7) ø5/M5.

Remove banjo bolt (8) with sealing rings.

■ CAUTION: Make sure that the ball (9) and the spring (10) of the pressure check valve are not damaged or lost.

- **Turbo oil suction line** (11) **(only on 914 Series) disassembly**

  The suction oil line is additionally supported on the turbocharger bracket by a cable clamp. Remove it before disassembly.

  Remove banjo bolt (12) M10 with sealing rings from the suction oil pump and the collar nut (13) from the oil sump.

  Clean all lines and inspect them visually. Check for free passage.

d02628

Reassembly of the lines in reverse order.

■ CAUTION: Pay attention that the lines are fitted free of stress and without scouring. Respect minimum distances, e.g. 2 mm (0.08 in.) from housing.

■ CAUTION: On the 914 Series, it is important to ensure that a shim distance ring (part no. 847224) is fitted between the cable clamp (14) and the gearbox housing.

Tightening torques:

banjo bolts M10	- 17 Nm (150 in.lb)
banjo bolts M8	- 10 Nm (90 in.lb)
collar nuts (13)	- 20 Nm (180 in.lb)
hex. screws M8x20 (14) (secure with LOCTITE 243).	- 15 Nm (135 in.lb)
screw plug M12x1 (16)	- 25 Nm (18.5 ft.lb)

◆ NOTE: On configuration 2 and 3, a distance sleeve (15) 10.5/15/10 is fitted instead of the governor oil line (1).

Fig. 79-17

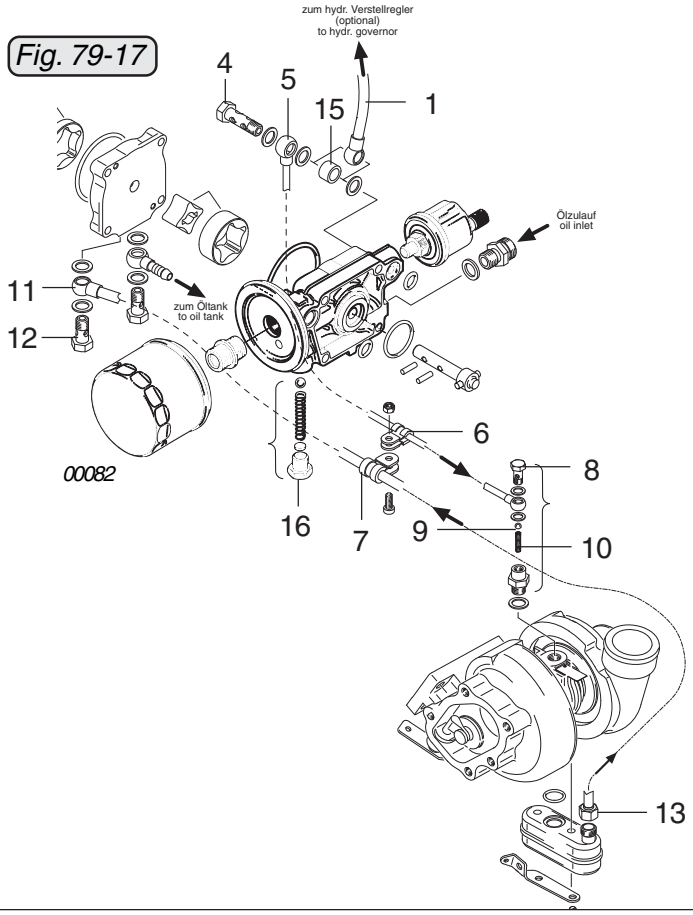

Fig. 79-18

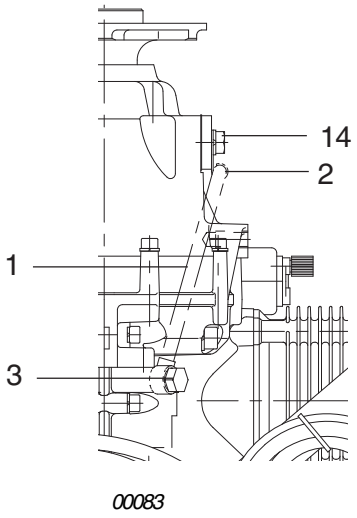

d02628

3.6) Oil lines

■ CAUTION: The oil lines not supplied with the engine must be maintained as per aircraft manufacturers specifications.

In addition the following maintenance work should be performed:

Clean oil feed line from oil tank to oil cooler and to oil pump and check visually. The same applies to the oil return lines. Pay special attention to the line ends. For replacement, only use genuine, certificated tubes. For attachment of the tubes use suitable screw hose clamps or crimp connections.

■ CAUTION: Use oil lines and tube clamps as specified in the aircraft manufacturers manual.

3.7) Oil cooler

■ CAUTION: The oil cooler is not supplied with the engine. Maintenance must be performed in accordance with the aircraft manufacturers instructions.

In addition the following maintenance work should be done:

Clean oil cooler fins and straighten them, if necessary. Rinse the oil cooler inside.

■ CAUTION: It is absolutely necessary after an engine damage, swarf in oil filter and on the magnetic plug to replace the oil cooler.

Carry out visual inspection of the oil cooler body and the connections. Pressure test with 3 bar (43.6 p.s.i) in a water bath to check for leaks.

See also latest issue Maintenance Manual "Line Maintenance“ for the respective engine type.

3.8) Purging of lubrication system

See the corresponding section in the respective Maintenance Manual (Line Maintenance) for the engine type, 912 Series or 914 Series.

3.9) Temperature- and pressure observation

See the corresponding Maintenance Manual (Line Maintenance) for the respective engine type, 912 Series or 914 Series.

◆ NOTE: The engines of the 912 Series and 914 Series have several temperature control points. Refer to wiring diagram in Operators Manual.

3.9.1) Oil temperature sensor

See Fig. 79-19

The sensor (1) for oil temperature measurement is screwed into the oil pump housing. The sensor is an NTC resistor and identical with the two sensors for the cylinder head temperature.

The max. operating temperatures must not be exceeded. In the event of temperature rise above the limit, check the following:

- the oil system (see corresponding Maintenance Manual (Line Maintenance) for the respective engine type, 912 Series or 914 Series.)
- temperature sensor
- indicating instrument
- wiring connections
- sensor cable.

◆ NOTE: Grounding connection of the sensors direct via the oil pump housing.

Fit sensor. See 79-00-00 sec. 3.1.

Fig. 79-19

09489

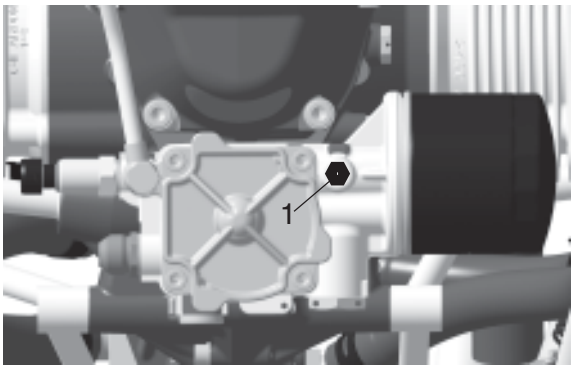

d05743

3.9.2) Oil pressure sensor

See Figs. 79-20, 79-21, 79-22 and 79-23.

The sensor for measurement of the oil pressure is screwed into the oil pump housing.

The range of the sensor is from 0 to 10 bar (0 to 145 p.s.i) This range (3) is indicated on the wrench flats of the sensor.

■ CAUTION: For this reason, the pressure range of the display instrument must be adjusted to the pressure range of the sensor. If this is not done, an incorrect oil pressure will be displayed.

Due to further develepment a new oil pressure sensor has been introduced. See therefore the latest issue of Service Instruction „Running Modifications“ SI-912-020 and SI-914-022 respectively.

New oil pressure sensor part no. 456180

Tightening torque: 15 Nm (133 in.lb).

No LOCTITE - seals with gasket ring (1).

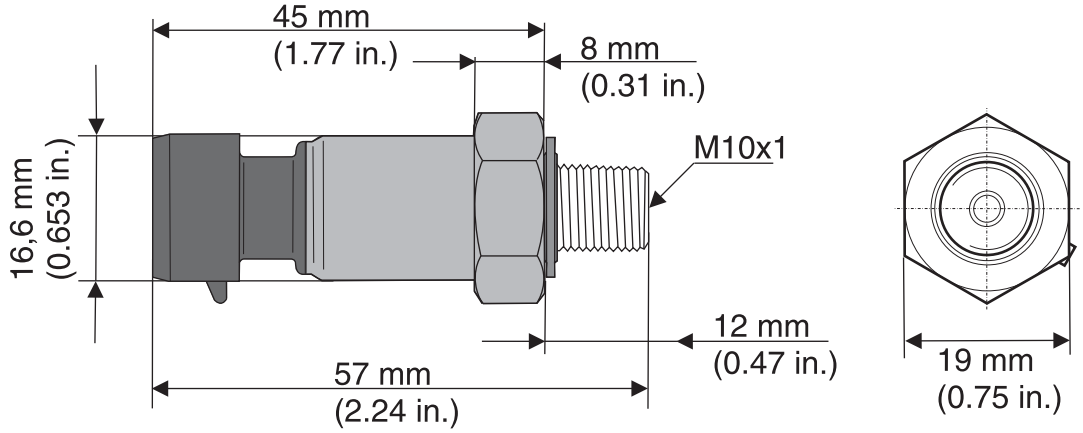

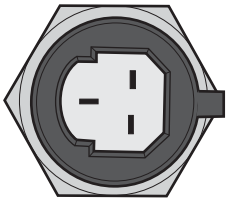

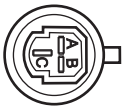

PIN	2 wire 4..20 mA
A	n.a.
B	8...28V DC
C	OUT/GND

d05743

Sensor characteristic curve:

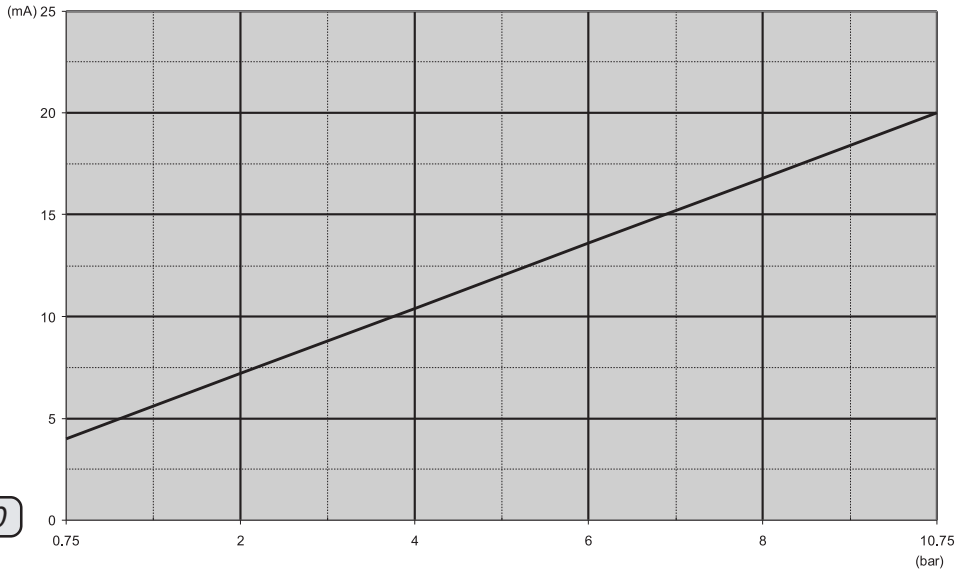

Fig. 79-20

08591

Retrofitting of oil pressure sensor part no. 956413 and part no. 956357

- location: oil pump housing
- wiring connection for instrument.

  (see fig. 79-20)

In contrary to the oil pressure sensor part no. 956413 and part no. 956357 the new oil pressure sensor part no. 456180 is equipped with a connector. As output signal the 2-wire version (4 to 20 mA) is available. **Oil pressure sensor PIN A** (connector housing PIN 1) is not connected and has no function.

■ CAUTION: To prevent the ingress of dampness into the connector housing, the free hole in the connector housing has to be closed with LOCTITE 5910, Silicone adhesive or similar.

Oil pressure sensor PIN B (connector housing PIN 2) has to be connected to the positive bus via a fuse or circuit breaker (the **Red** lead from the current oil pressure sensor). **Oil pressure sensor PIN C** (output signal) (connector housing PIN 3) has to be connected directly to the indicating instrument. For connection to the indicating instrument a connector set or oil pressure sensor wire assy. is available. See Ilustrated Parts Catalog (IPC).

◆ NOTE: The sensor cable can be modified in its length according to the installation situation, e.g. shortened or extended. For extension an appropriate cable (Ölflex$_{\hat{a}}$ Heat 260

d05743

MC 2x 0.5 mm^2 (AWG 20) or equivalent) can be used. A resistance cable or similar is not necessary.

- wire gauge: stranded wire, 0.5 mm^2 (AWG 20)
- operating temperature range:

  min.: - 25 °C (-13 °F)

  max.: + 125 °C (+ 257 °F)

■ CAUTION: The sensor characteristic has been determined, and is effective at the following conditions only (see fig. 1).

ambient temperature: 20 °C (68 °F)
tolerance: ± 4%

- tightening torque: 15 Nm (98 in.lb) and LOCTITE 243

Replacement of the current oil pressure sensor part non. 956413 and part no. 956357 by part no. 456180

Parts requirement: oil pressure sensor part no. 456180 and oil pressure cable assy. part no. 864250.

■ CAUTION: Take care which oil pump housing is mounted. The part number is shown on the housing.

Oil pump housing part no. 911815 and part no. 911810

1. Remove the oil pressure sensor part no. 956413.
2. Install new oil pressure sensor part no. 456180 with LOCTITE 243.

   Tightening torque 15 Nm (98 in.lb)

Oil pump housing part no. 811809

New oil pressure sensor part no. 456180 cannot be installed. Oil pump housing must be replaced or the threads must be recut.

1. Remove the oil pump housing in accordance with the relevant Maintenance Manual (Heavy).

Option A: Replace oil pump housing

Replace oil pump housing.

Option B: Rework of the oil pump housing

Recut threads with M10x1 thread tap.

■ CAUTION: Clean the thread completely from swarf.

2. Install the oil pump housing in accordance with the relevant Maintenance Manual (Heavy).

d05743

3. Install new oil pressure sensor part no. 456180 with LOCTITE 243.
   Tightening torque 15 Nm (98 in.lb).

▲ WARNING: Certification to the latest requirements such as FAR or EASA has to be conducted by the aircraft manufacturer.

Old version: part no. 956357

07226

Fig. 79-21

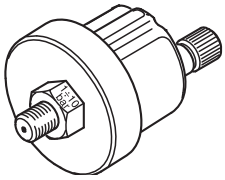

◆ NOTE: Grounding connection of the sensor is direct via the oil pump housing.

For sensor resistance see following graph showing sensor resistance over pressure. Compare pressure gauge with a calibrated instrument.

■ CAUTION: The graph resistance over pressure has been determined, and is effective at the following conditions only.

ambient temperature:	20 °C (68 °F)
voltage:	12 V
deviation:	max ± 5%

After removal of oil pressure sensor, clean the thread. Apply LOCTITE 243 to thread of sensor and tighten to 15 Nm (133 in.lb).

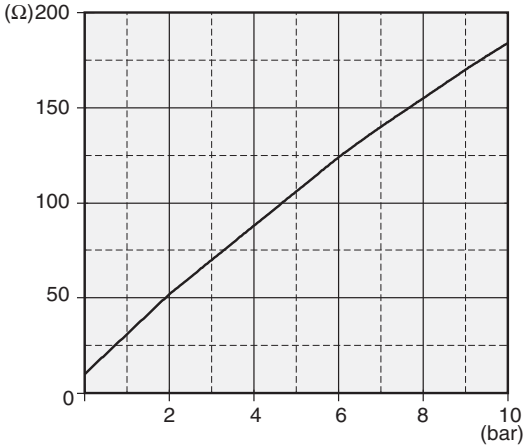

00229

Fig. 79-22

d05743

Old Version: part no. 956413

◆ NOTE: Grounding connection of the sensor is direct via the oil pump housing.

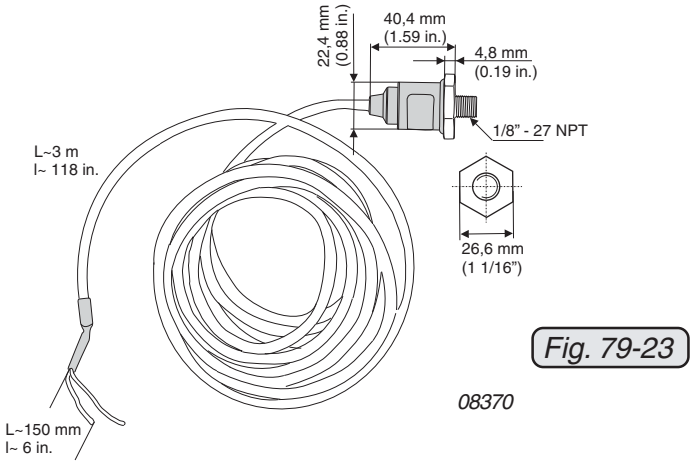

Fig. 79-23

In contrary to the oil pressure sensor part no. 956357 offered up to now, the new oil pressure sensor operates on basis of a current variation.

- operating temperature range:

  min.: - 40 °C (-40 °F)

  max.: + 125 °C (+ 257 °F)

- grounding: via engine block/airframe ground

■ CAUTION: The graph current over pressure has been determined, and is effective at the following conditions only.

- ambient temperature: 20 °C (68 °F)
- tolerance: ± 5%
- tightening torque: 15 Nm (98 in.lb) and LOCTITE 234

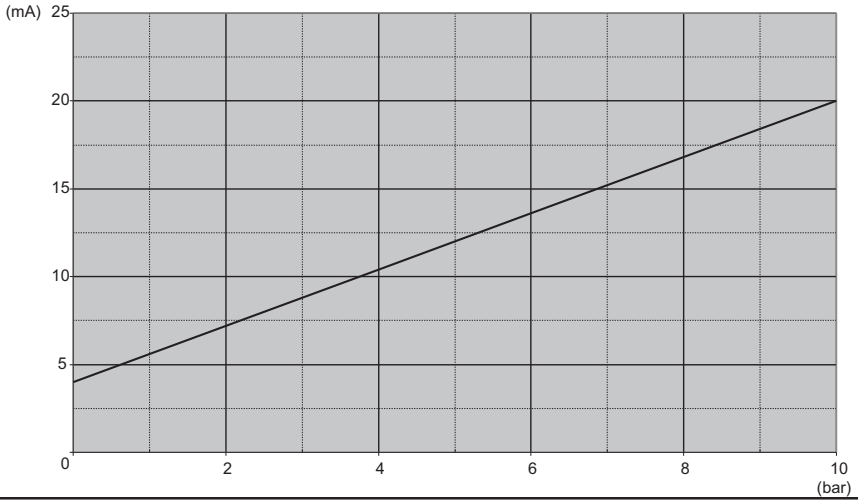

d05743

The sensor cable is approx. 3 m long and has 3 leads. The **Black** lead is not to be connected and has no function. The **Red** lead from the sensor has to be connected to the positive bus via a fuse or circuit breaker. The **White** lead (output signal) has to be connected directly to the instrument. See also the relevant instructions of the instrument supplier/aircraft manufacturer for correct connection and wiring.

4) Wear limits

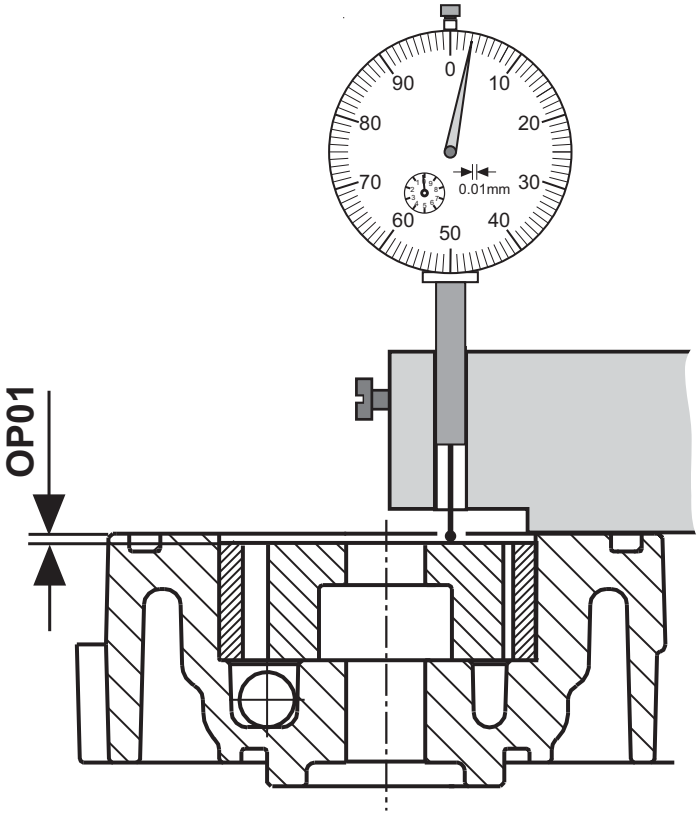

Fig. 79-24

00229

Description	Code	Reading new		wear limit	wear limit		Readings
		min	max	100%	50%		
Oil pump							
Clearance main pump (pump cover/ rotor)	OP01	**0,00** 0,0000	**0,05** 0,0020	**0,20** 0,0079	**0,13** 0,0049	**actual**	
						renewed	
Clearance suction pump (pump cover / rotor)	OP01	**0,00** 0,0000	**0,05** 0,0020	**0,20** 0,0079	**0,13** 0,0049	**actual**	
						renewed	

07429

d05743

SECTION 80

ELECTRIC STARTER

1) Table of contents

SECTION 80
ELECTRIC STARTER

1) Table of contents ..... 80-00-00 / 1
2) Systems description ..... 80-00-00 / 3
  2.1) Electric starter ..... 80-00-00 / 3
3) Maintenance ..... 80-00-00 / 5
  3.1) Electric starter dismantling ..... 80-00-00 / 5
    3.1.1) Standard starter ..... 80-00-00 / 5
    3.1.2) HD starter ..... 80-00-00 / 6
  3.2) Electric starter — disassembly ..... 80-00-00 / 7
    3.2.1) Standard starter ..... 80-00-00 / 7
    3.2.2) HD starter ..... 80-00-00 / 8
  3.3) Electric starter — inspection of individual parts ..... 80-00-00 / 9
  3.4) Electric starter — reassembly ..... 80-00-00 / 11
  3.5) Electric starter — installation ..... 80-00-00 / 12
    3.5.1) Standard starter ..... 80-00-00 / 12
    3.5.2) HD starter ..... 80-00-00 / 12
4) Wear limits ..... 80-00-00 / 13

d04358

NOTES

d02629

2) Systems description

2.1) Electric starter

The electric starter is a DC motor with permanent magnets and carbon brushes. The gear-tooth system on the armature shaft is permanently engaged in the intermediate gear.

During the startup process, the sprag clutch establishes a connection to the crankshaft via the intermediate gear and the free wheel gear. As soon as the engine speed is higher than the speed generated by the electric starter, the sprag clutch disengages.

See 72-00-00 sec. 3.6 and 72-00-00 sec. 3.7.

◆ NOTE: To improve startup, there is an optional HD (heavy duty) starter with increased power available. See SB-912-037 and SB-914-023 “Installation of an electric starter with enhanced power“, latest issue.

d02629

NOTES

d02629

3) Maintenance

The following sections describe maintenance procedure for engines of the 912/914 Series above and beyond the maintenance and special checks, see corresponding Maintenance Manual (Line Maintenance) for the respective engine type, 912 Series or 914 Series, and the systems descriptions given hitherto. The description is divided into subsections and descriptions of the function of the various systems.

3.1) Electric starter dismantling

3.1.1) Standard starter

See Fig. 80-1

◆ NOTE: In the course of continuous development and standardization the components (1), (2) and (3) in figure 80-1 were replaced by the part (10).

Remove the 2 hex. nuts M5 (1) with lock washers (2) and washers (3) or the cap nut (10) from the rear side of the ignition cover (8). The electric starter (6) can be removed by releasing the tension clamp (7). The electric starter is kept in position by 2 distance sleeves (4) and O-rings (5).

◆ NOTE: When withdrawing the electric starter from the ignition housing, hold the bearing flange with starter housing and rotor bearing together. Otherwise the carbon brushes will jump off the commutator.

Fig. 80-1

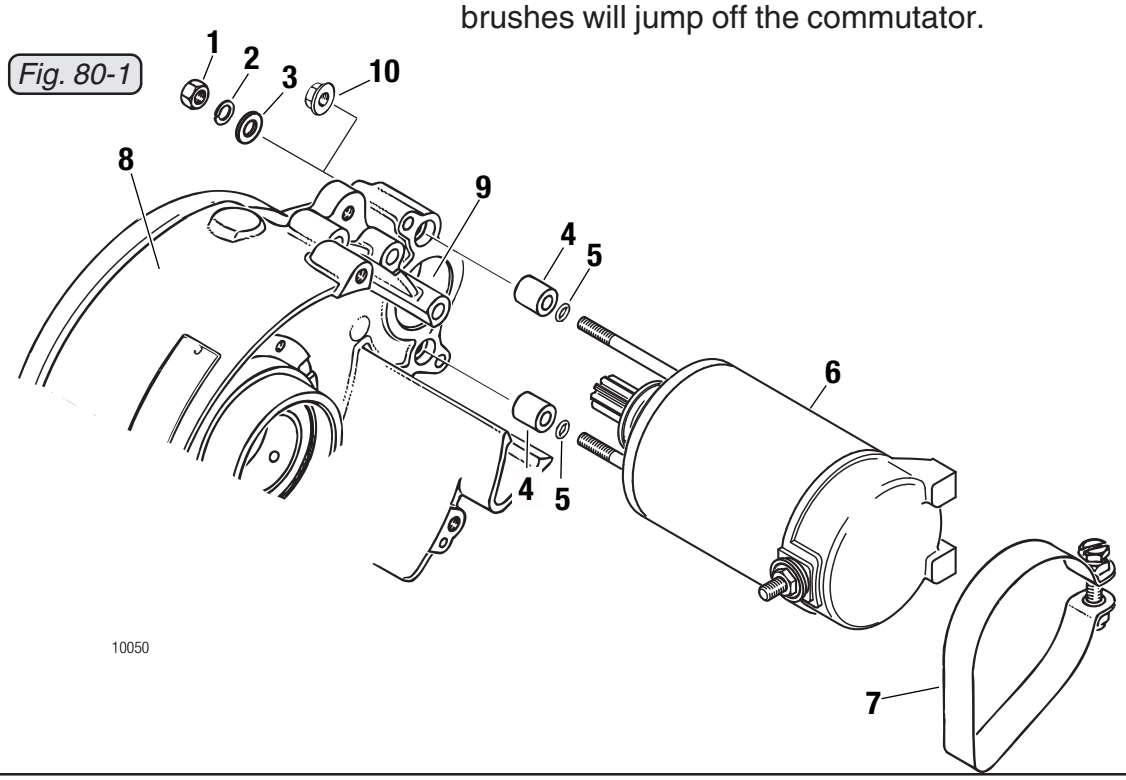

d05744

3.1.2) HD starter

See Fig. 80-2

Remove the 2 hex. nuts M5 (1) with lock washers (2) and washers (3) or the cap nut (10) from the rear side of the ignition cover (6). The electric starter (4) can be removed by releasing the tension clamp (5).

◆ NOTE: In the course of continuous development and standardization the components (1), (2) and (3) in figure 80-2 were replaced by the part (10).

Fig. 80-2

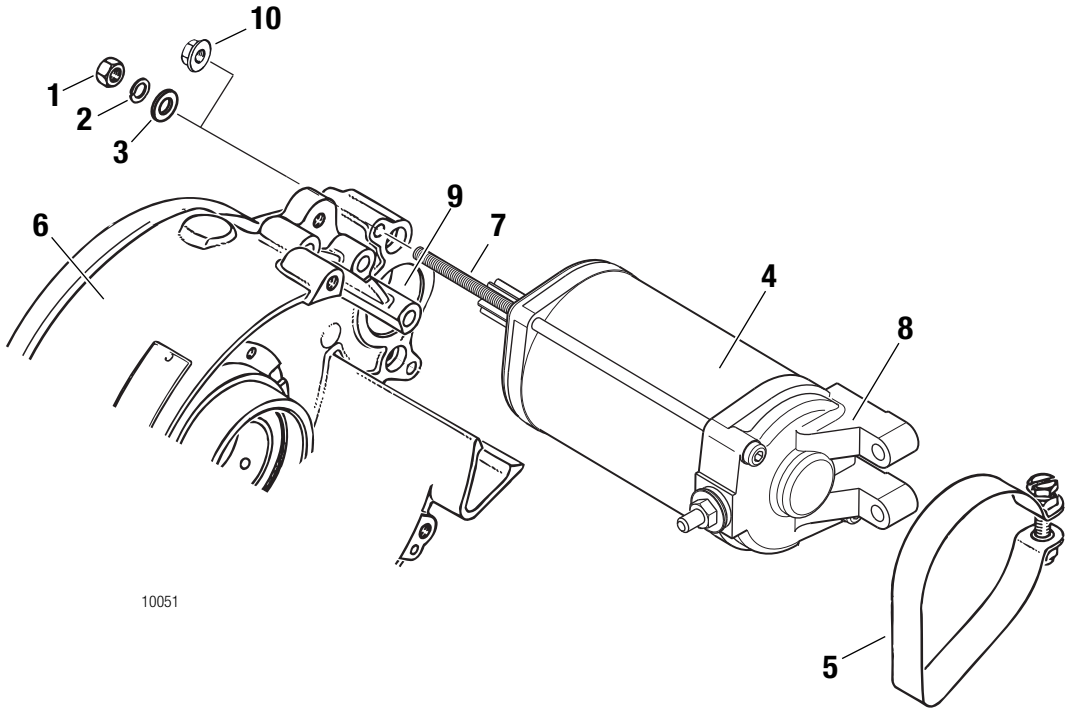

d05744

3.2) Electric starter — disassembly

3.2.1) Standard starter

See Fig. 80-3

Unscrew combined nut (23) and remove connector sheath (17) with O-ring (19). Pull bearing flange (1) off the starter housing (2). Carefully pull rotor bearing (3) a short way off the starter housing and press the positive carbon brush (23) with the connector sheath (17) out of the rotor bearing.

Remove brush holder (4) with the carbon brushes from the rotor (5). Pull rotor out of the starter housing together with compensating shim (6). Clean all parts thoroughly. See 00-00-00 sec. 10.3.

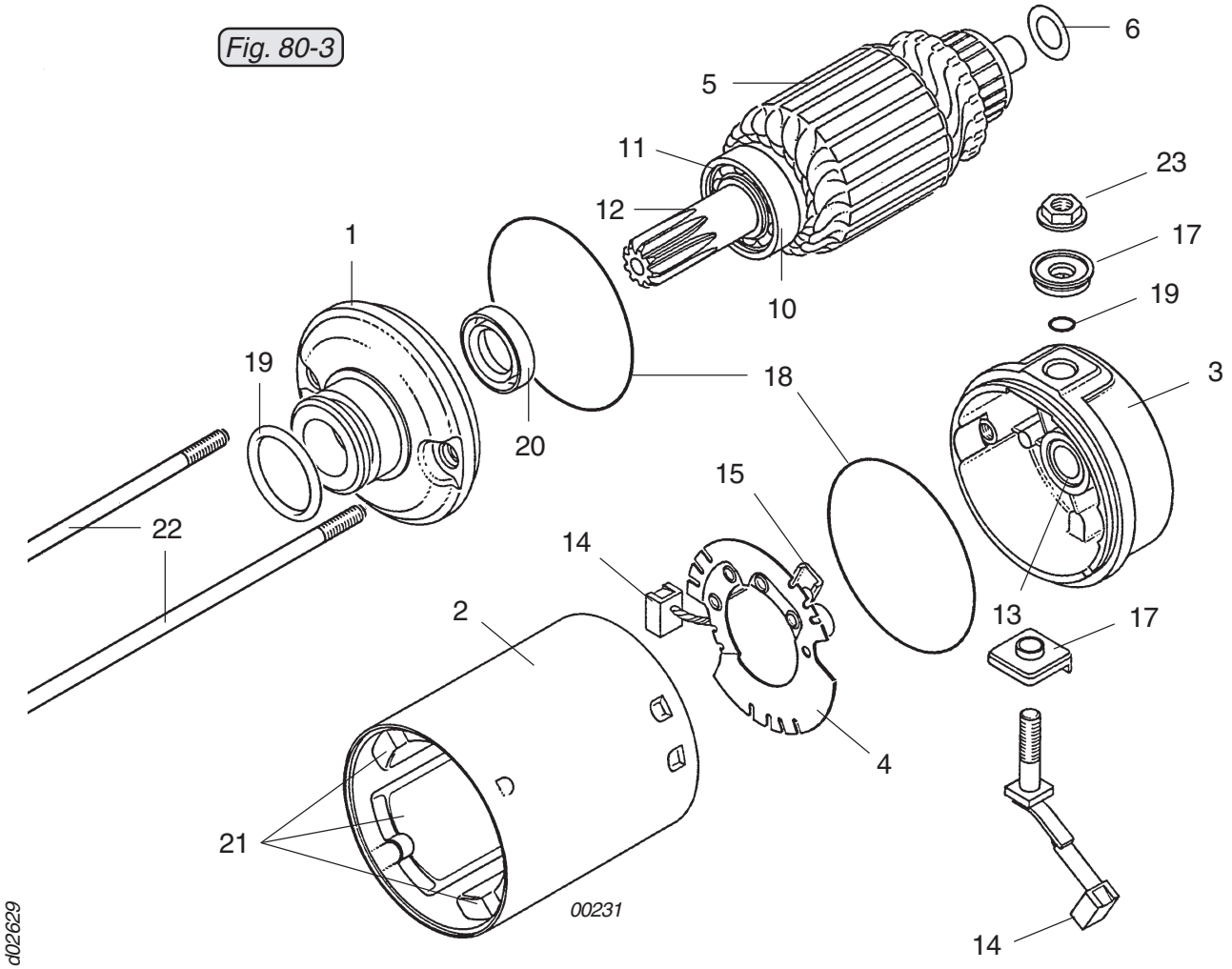

3.2.2) HD starter

See Fig. 80-4

Unscrew combined nut (23) and remove connector sheath (17) with O-ring (19). Unscrew allen screw (24) M5 and pull bearing flange (1) off the starter housing (2). Carefully pull rotor bearing (3) a short way off the starter housing and press the positive carbon brush (23) out of the rotor bearing.

Remove brush holder (4) with the carbon brushes from the rotor (5). Pull rotor out of the starter housing together with compensating shim (6). Clean all parts thoroughly. See 00-00-00 sec. 10.3.

Fig. 80-4

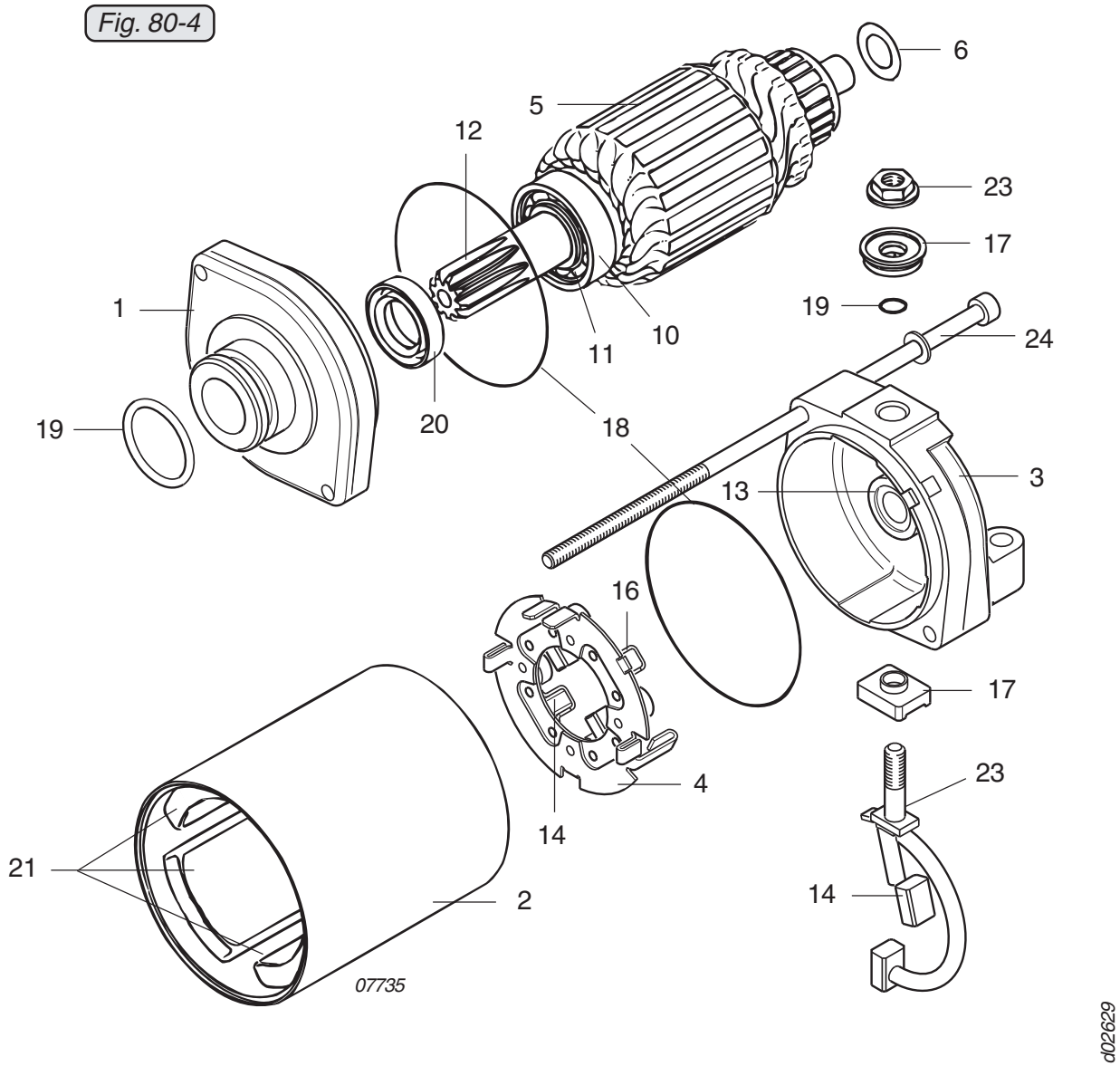

3.3) Electric starter — inspection of individual parts

See Figs. 80-3, 80-4, 80-5, 80-6, 80-8 up to 80-11

◆ NOTE: The following work steps apply to both starter models (HD and standard starter).

After disassembly of starter, check the following parts:

See 80-00-00 sec. 4

Rotor

Clean commutator, check for run out, carry out visual inspection, if necessary fine machine and undercut commutator ribs (7), see Fig. 80-5. The insulation should be 0.5 mm (.02 in.) lower than the ribs.

▲ WARNING: During this machining process, material particles are released and could possibly be inhaled.

Check rotor at 12 or 24 Volts with test lamp between commutator (8) and iron core (9) for connection to ground. If the lamp lights up, replace rotor.

Check rotor coils for interruption at 2 or 4 Volts and an interposed ammeter (measuring range 60 A), see Fig. 80-6. If there are great differences between the individual ribs, the rotor must be replaced. If the rotor shows clear signs of overheating, replace it.

Check ball bearing (10) 6002 Z. When replacing the rotor, fit it with the closed side facing towards the middle of the rotor (open side (11) facing outward) to prevent abraded particles penetrating the ball bearing. Inspect gear-tooth system (12) and radial clearance of the rotor in the rotor bearing (3).

Fig. 80-5

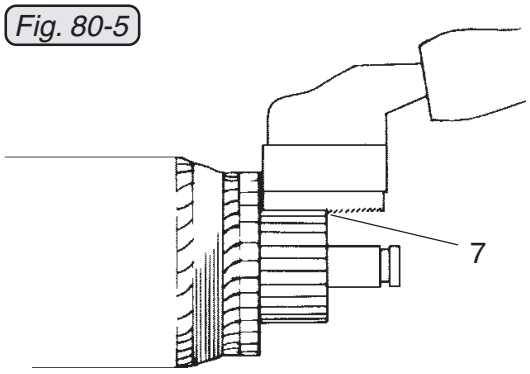

Fig. 80-6

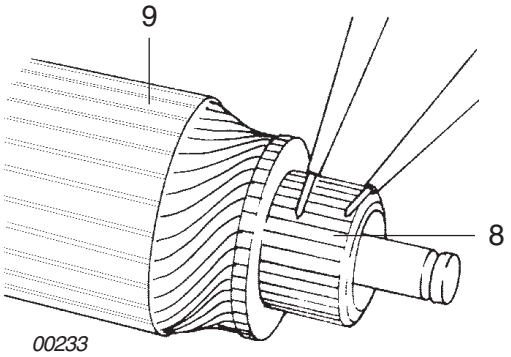

d04358

Bearings

Check bearing socket (13) and if necessary, replace the complete rotor bearing.

Carbon brushes

Carbon brushes (14) must move freely in their guides (15). Replace too short brushes (min. length 8 mm = 0.32 "). Check spring pressure, replace hot-run brush springs (16). Check connector sheaths (17) of the positive-pole carbon brush (18), replace as required.

O-rings

Replace all O-rings (19) and oil seal (20) when repairing the electric starter.

Starter housing

Carry out visual inspection of the inner magnets (21) for cracks.

Studs

Carry out visual inspection of both studs (22) or allen screws (24).

d02629

3.4) Electric starter — reassembly

See Figs. 80-3, 80-4, 80-5, 80-6 and 80-7.

◆ NOTE: The following work steps apply to both starter models (HD and standard starter).

Determine the required number of compensating shims (6) for the axial clearance, see dimension (ES08) of the rotor (5).

See 80-00-00 sec. 4.

Grease oil seal (20), the ball bearing (10) and the bearing bushing (13). Insert rotor (5) into the bearing flange (1), fit new O-ring 62x1.5 (18) and put starter housing (2) over rotor.

Fit the brush holder (4) with the carbon brushes (14) onto the rotor. Push compensating shims (6) onto the rotor shaft, insert the positive-pole carbon brush (23) into the rotor bearing and then fit the complete rotor bearing (3) with new O-ring 62x1.5 onto the starter housing.

◆ NOTE: Ensure correct positioning and engagement of the positioning noses.

The HD starter is screwed together with the allen screws (24) M5x180, tightened to a torque of 6 Nm (53 in.lb).

Fig. 80-7

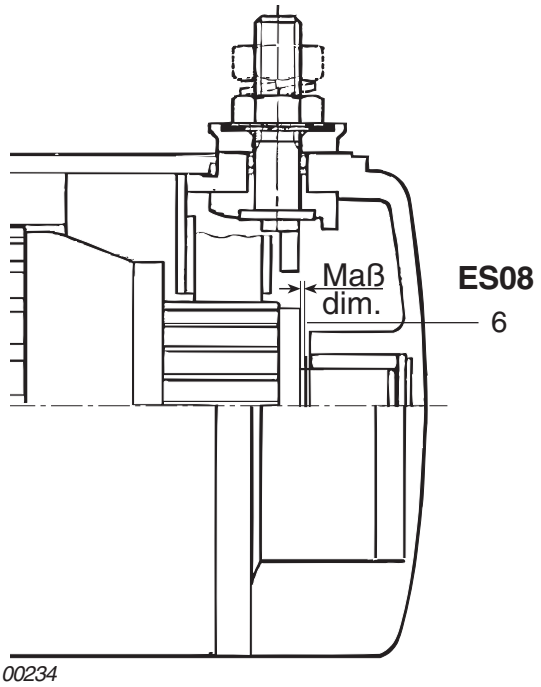

d04798

3.5) Electric starter — installation

3.5.1) Standard starter

See Fig. 80-1

Lightly grease the centering bore (9) in the ignition housing (8). Push complete electric starter (6) with new O-rings (5) 4.7x1.4 and distance sleeves (4) into the ignition housing (8).

◆ NOTE: Take care that the electric starter is not pushed apart as you do so.

Attach electric starter with lock washer (2) A5 and hex. nut (1) M5 or only with cap nut M5 (10) to the crankcase, fix to ignition housing with a tension clamp (7). Tighten combined nut of the plus terminal connection to a tightening torque of 4 Nm (35 in.lb).

3.5.2) HD starter

See Fig. 80-2

Lightly grease the centering bore (9) in the ignition housing (6). Push complete electric starter (4) into the ignition housing (6). Tighten evenly with washer (3), spring (2) and hex. nut (1) or only with cap nut M5 (10) and then attach to the ignition housing with the tension clamp (5).

■ CAUTION: The allen screw (7) M5x180 is only for "internal“ attachment of the starter components. During assembly on the ignition housing, the allen screw (7) must not be turned, as the position of the rotor bearing (8) could be changed. The marks on the rotor bearing and on the starter housing must correspond.

d05744

4) Wear limits

◆ NOTE: The wear limits apply to both configurations of the electric starter, standard and HD.

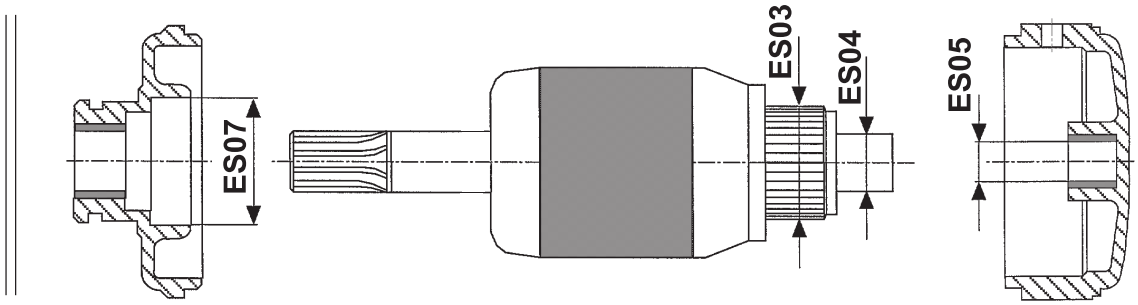

Fig. 80-8 07449

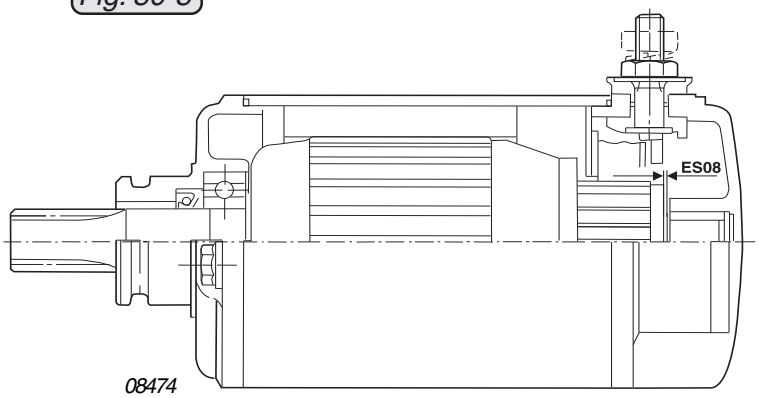

08474

standard configuration

Fig. 80-9

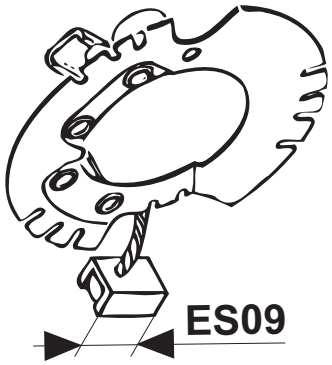

07555

Fig. 80-10

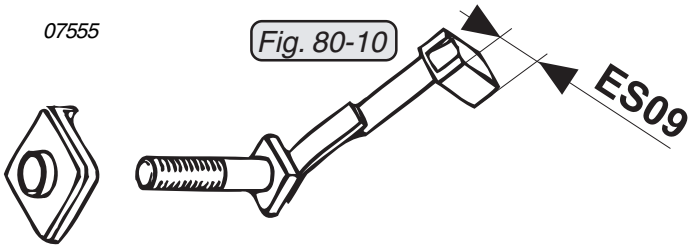

HD configuration

Fig. 80-11 07556

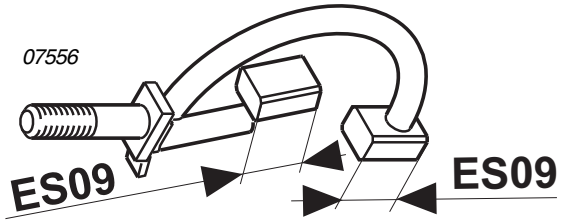

d05744

08249

Description	Code	Reading new		wear limit	wear limit		Readings
		min	max	100%	50%		
Electric starter							
Commutator	ES03	**27,5** 1,083	**28,0** 1,102	**27,0** 1,063	**27,3** 1,075	actual	
						renewed	
Armature shaft	ES04	**9,77** 0,3846	**9,79** 0,3854	**9,75** 0,3839	**9,76** 0,3843	actual	
						renewed	
Armature bushing	ES05	**9,82** 0,3866	**9,84** 0,3874	**9,86** 0,3882	**9,85** 0,3878	actual	
						renewed	
Bearing seat on shield	ES07	**32,000** 1,2598	**32,036** 1,2613	**32,069** 1,2626	**32,053** 1,2619	actual	
						renewed	
Axial clearance	ES08	**0,1** **0**,004	**0,4** **0**,016	**0,4** **0**,016		actual	
						renewed	
Length of plus brush	ES09	**12,0** 0,472	**12,5** 0,492	**8,5** 3,347		actual	
						renewed	
Length of minus brush	ES09	**12,0** 0,472	**12,5** 0,492	**8,5** 3,347		actual	
						renewed	
Radial clearance armature shaft/ armature bushing	ES05/ ES04	**0,0000** 0,0000 0,03	**0,03** 0,012 0,07	**0,11** 0,0043 0,11	**0,07** 0,0028 0,09	actual	
						renewed	
bearing seat on shaft	ES06	**14,997** 0,5904	**15,005** 0,5907	**14,987** 0,5900		actual	
						renewed	

d05744