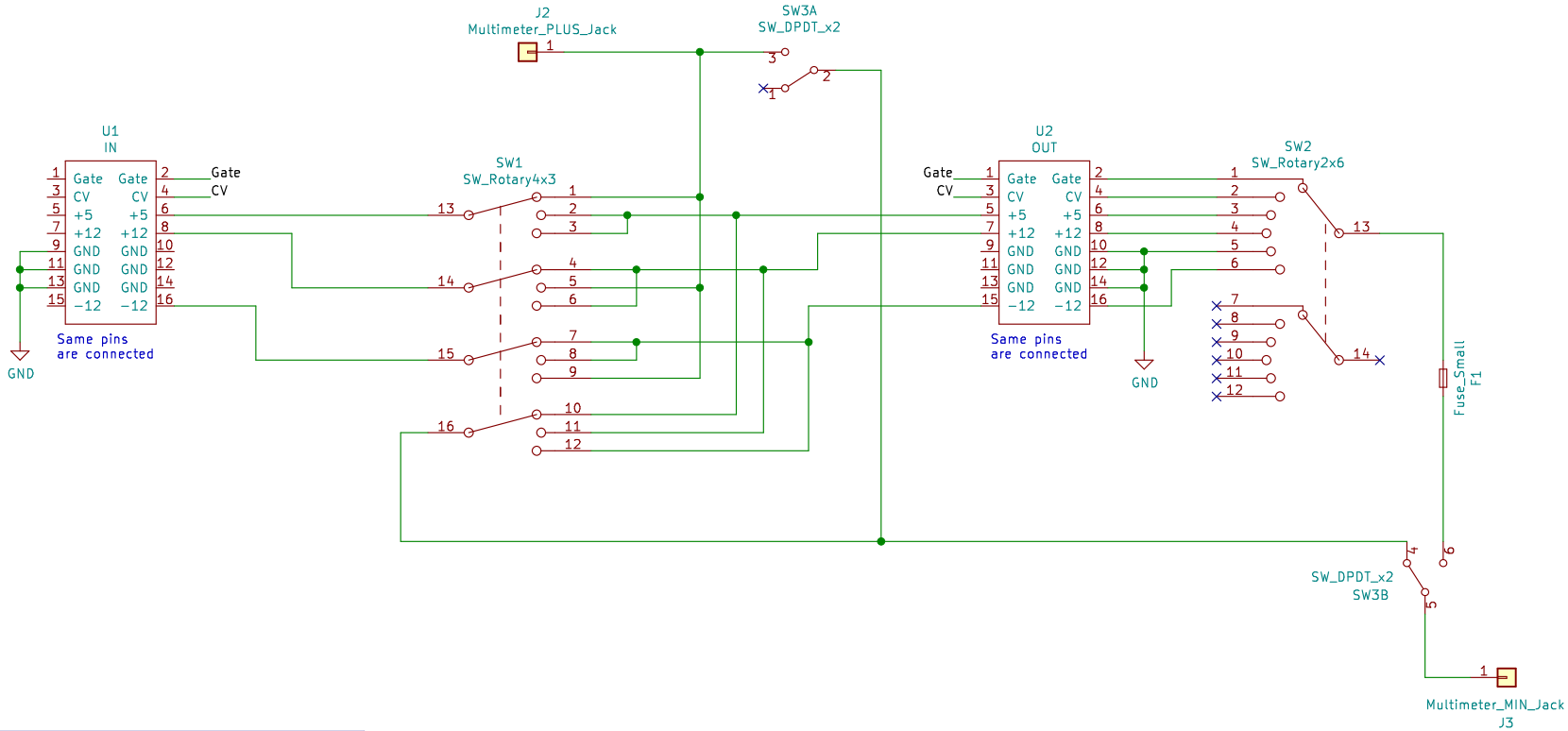

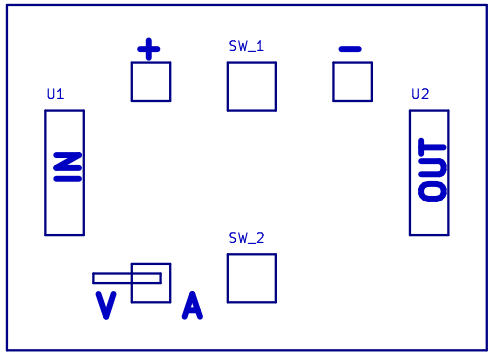

DO-NOT:
- Put your multimeter on Ampere mode and "Measure Man" on Volt Mode.
- This will short circuit your powersupply !!
- Otherwise add fuse F1 to protect this from happening.
- Lookup your power supply for the max Ampere it can deliver to choose the appropriate fuse.

V (Volt) mode:
- Measure power supply voltage:
- Check cable discontinuity
- Power up module

A (Ampere) mode:
- Measure module ampere
- Check cable continuity

Measure Man
By L. Geerinckx

29-04-2021

FOR PERSONAL USE ONLY

Sheet: /
File: Measure_Man.sch

Title:

Size: A4	Date:	**Rev:**
KiCad E.D.A. kicad (5.1.5)-3		Id: 1/1