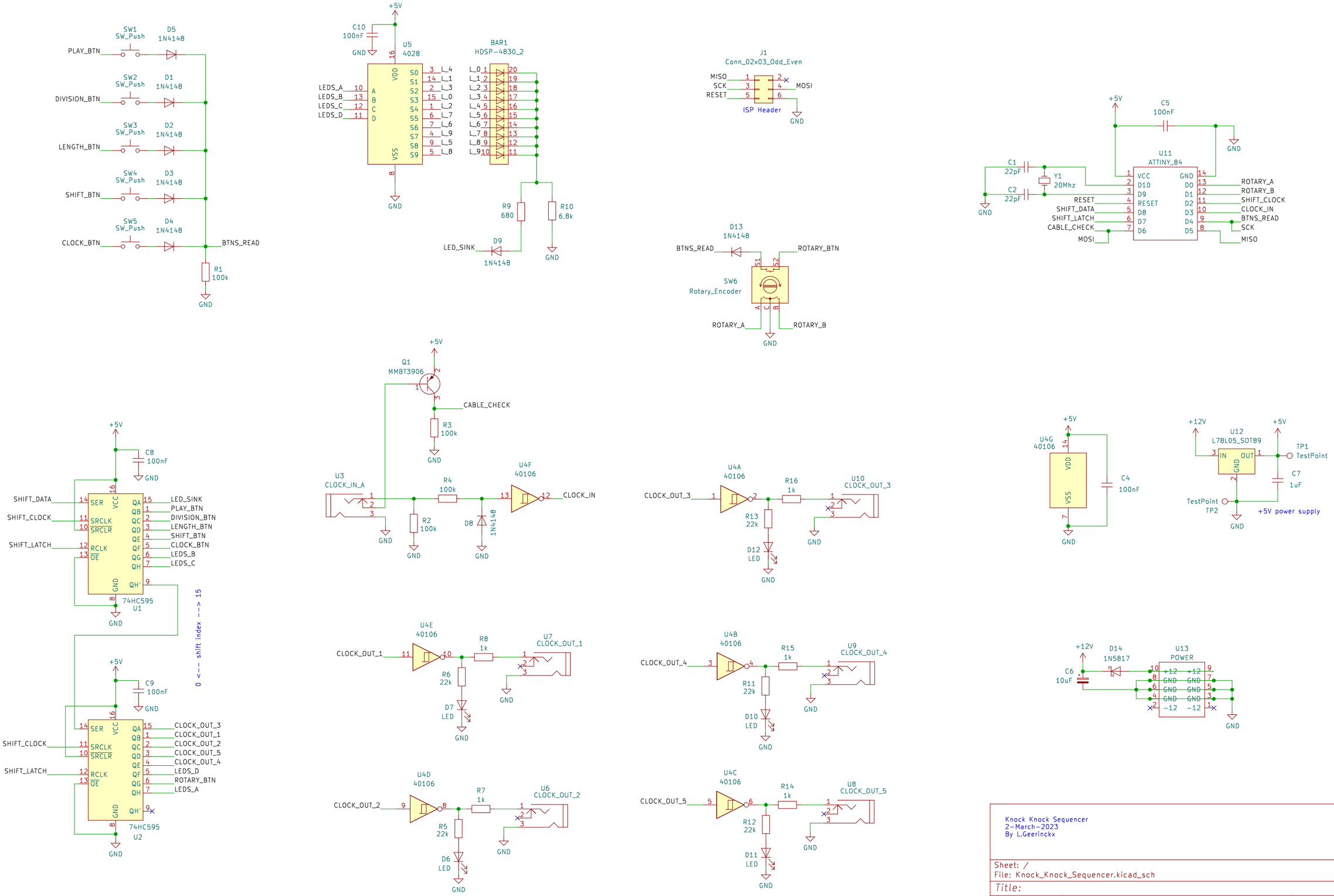
SW1 SW_Push
D5 1N4148
PLAY_BTN
SW2 SW_Push
D1 1N4148
DIVISION_BTN
SW3 SW_Push
D2 1N4148
LENGTH_BTN
SW4 SW_Push
D3 1N4148
SHIFT_BTN
SW5 SW_Push
D4 1N4148
CLOCK_BTN
BTNS_READ
R1 100k
GND
+5V
C10 100nF
U5 4028
VDD
VSS
LEDS_A
LEDS_B
LEDS_C
LEDS_D
BAR1 HDSP-4830_2
R9 680
R10 6,8k
LED_SINK
D9 1N4148
J1 Conn_02x03_Odd_Even
MISO
SCK
RESET
MOSI
ISP Header
D13 1N4148
BTNS_READ
ROTARY_BTN
SW6 Rotary_Encoder
ROTARY_A
ROTARY_B
C5 100nF
U11 ATTINY_84
C1 22pF
C2 22pF
Y1 20Mhz
VCC
D10
D9
RESET
D8
D7
D6
GND
D0
D1
D2
D3
D4
D5
SHIFT_DATA
SHIFT_LATCH
CABLE_CHECK
SCK
CLOCK_IN
Q1 MMBT3906
R3 100k
U3 CLOCK_IN_A
R4 100k
R2 100k
D8 1N4148
U4F 40106
CLOCK_IN
C8 100nF
SER
SRCLK
SRCLR
RCLK
OE
QA
QB
QC
QD
QE
QF
QG
QH
QH'
LED_SINK
PLAY_BTN
DIVISION_BTN
LENGTH_BTN
SHIFT_BTN
CLOCK_BTN
LEDS_B
LEDS_C
74HC595 U1
0 <-- shift index --> 15
C9 100nF
CLOCK_OUT_3
CLOCK_OUT_1
CLOCK_OUT_2
CLOCK_OUT_5
CLOCK_OUT_4
LEDS_D
ROTARY_BTN
LEDS_A
74HC595 U2
U4A 40106
R16 1k
U10 CLOCK_OUT_3
R13 22k
D12 LED
U4E 40106
R8 1k
U7 CLOCK_OUT_1
R6 22k
D7 LED
U4B 40106
R15 1k
U9 CLOCK_OUT_4
R11 22k
D10 LED
U4D 40106
R7 1k
U6 CLOCK_OUT_2
R5 22k
D6 LED
U4C 40106
R14 1k
U8 CLOCK_OUT_5
R12 22k
D11 LED
U4G 40106
C4 100nF
+12V
U12 L78L05_SOT89
IN
OUT
C7 1uF
TP1 TestPoint
TP2
+5V power supply
D14 1N5817
C6 10uF
U13 POWER
+12
-12
Knock Knock Sequencer
2-March-2023
By L.Geerinckx
Sheet: /
File: Knock_Knock_Sequencer.kicad_sch
Title:
Size: A3
Date:
Rev:
KiCad E.D.A. kicad (6.0.1)
Id: 1/1