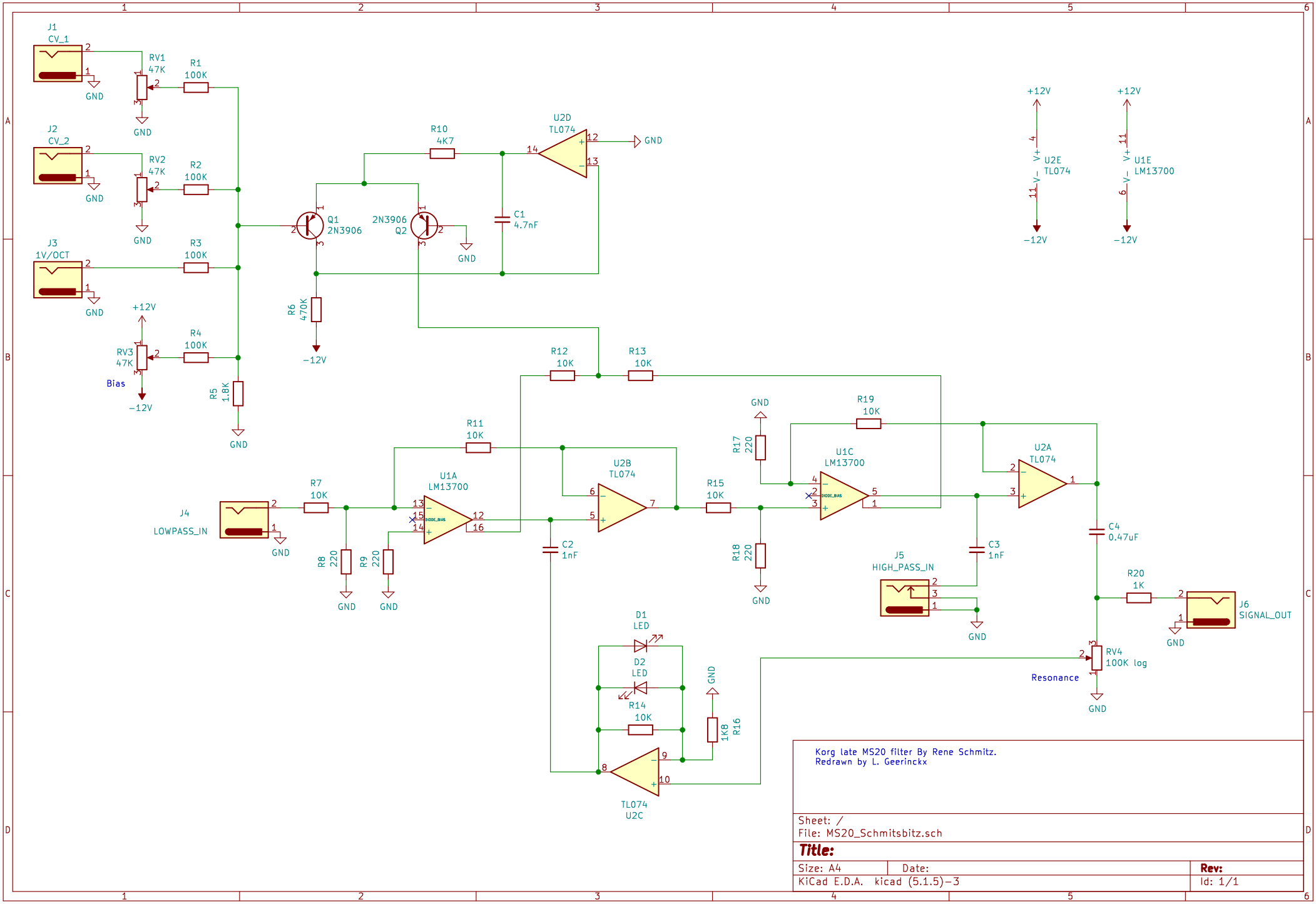

Korg late MS20 filter By Rene Schmitz.
Redrawn by L. Geerinckx

Sheet: /
File: MS20_Schmitsbitz.sch

Title:

Size: A4	Date:	**Rev:**
KiCad E.D.A. kicad (5.1.5)-3		Id: 1/1