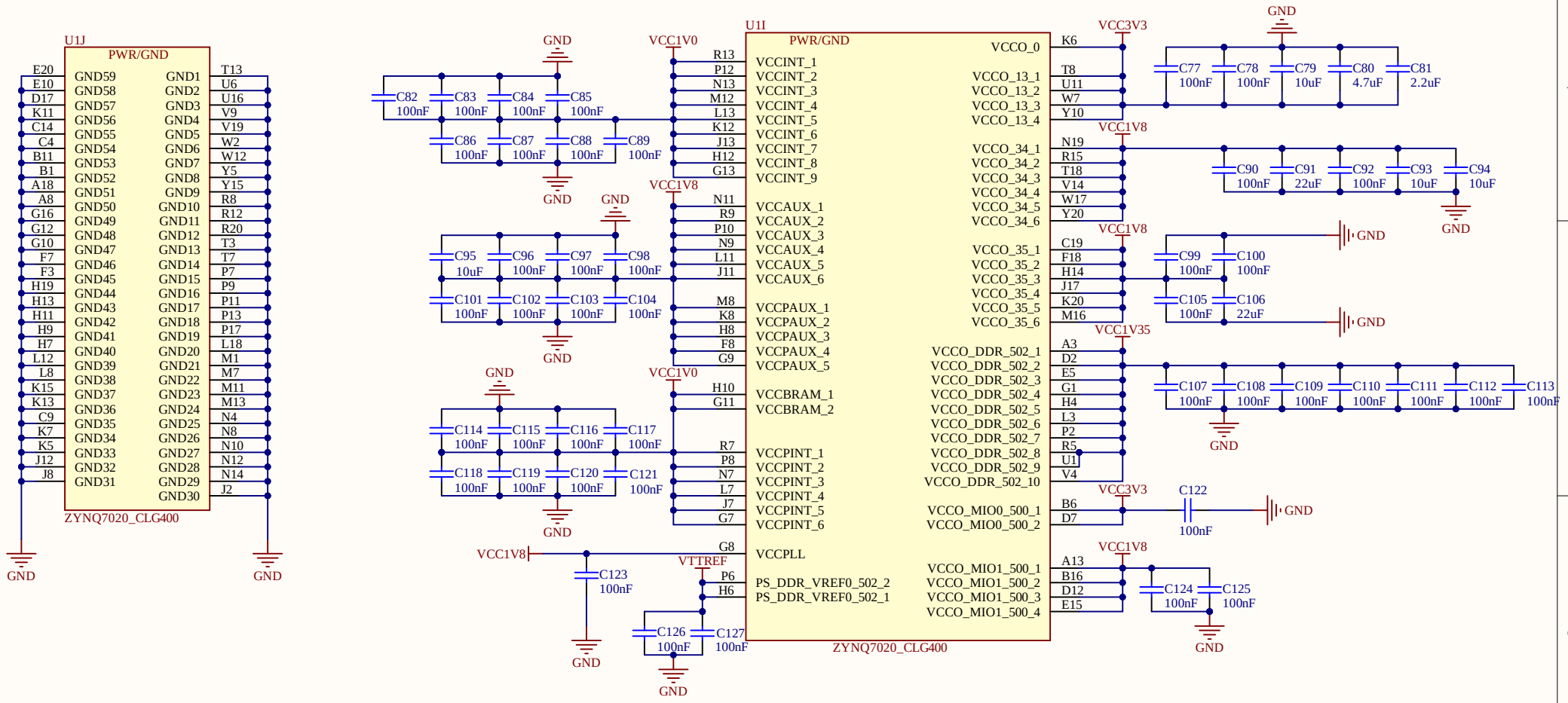

Title		
Size A4	Number	Revision
Date: 2/15/2025		Sheet of
File: F:\HardWare_Design\..\ZYNQ_PWR_BANK.SchDoc		Drawn By:

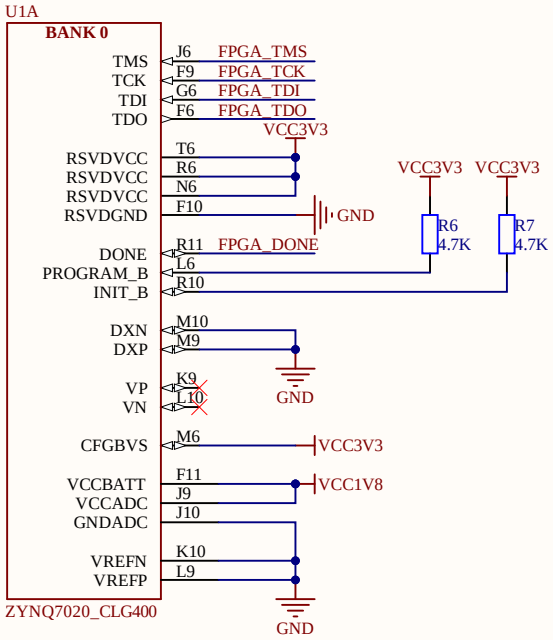

ZYNQ7020 BANK0

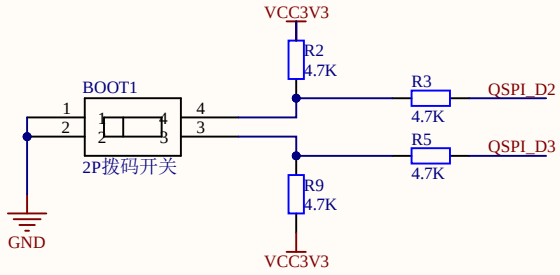

BOOT	开关1	开关2
QSPI	1	0
SD	0	0
JTAG	1	1

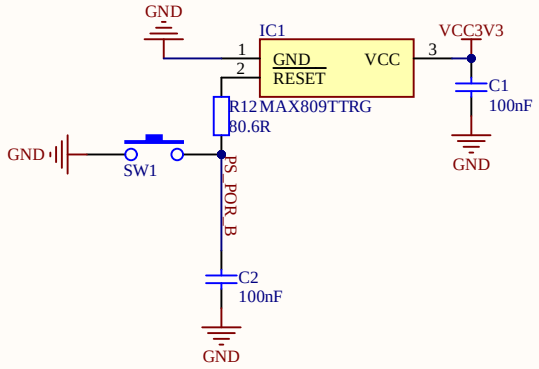

启动模式配置

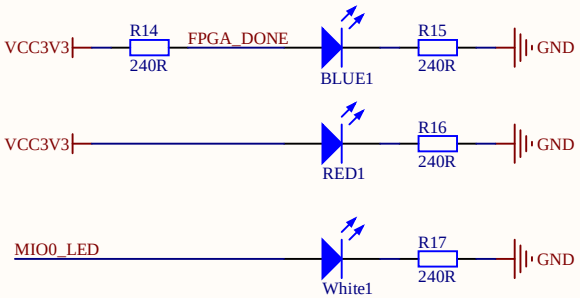

指示灯

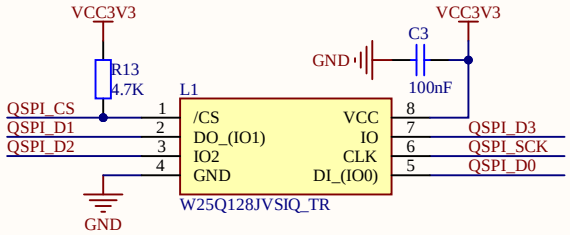

W25Q128 Flash

Title		
Size A4	Number	Revision
Date: 2/15/2025	Sheet of	
File: F:\HardWare_Design\..\ZYNQ_Core.SchDoc	Drawn By:	

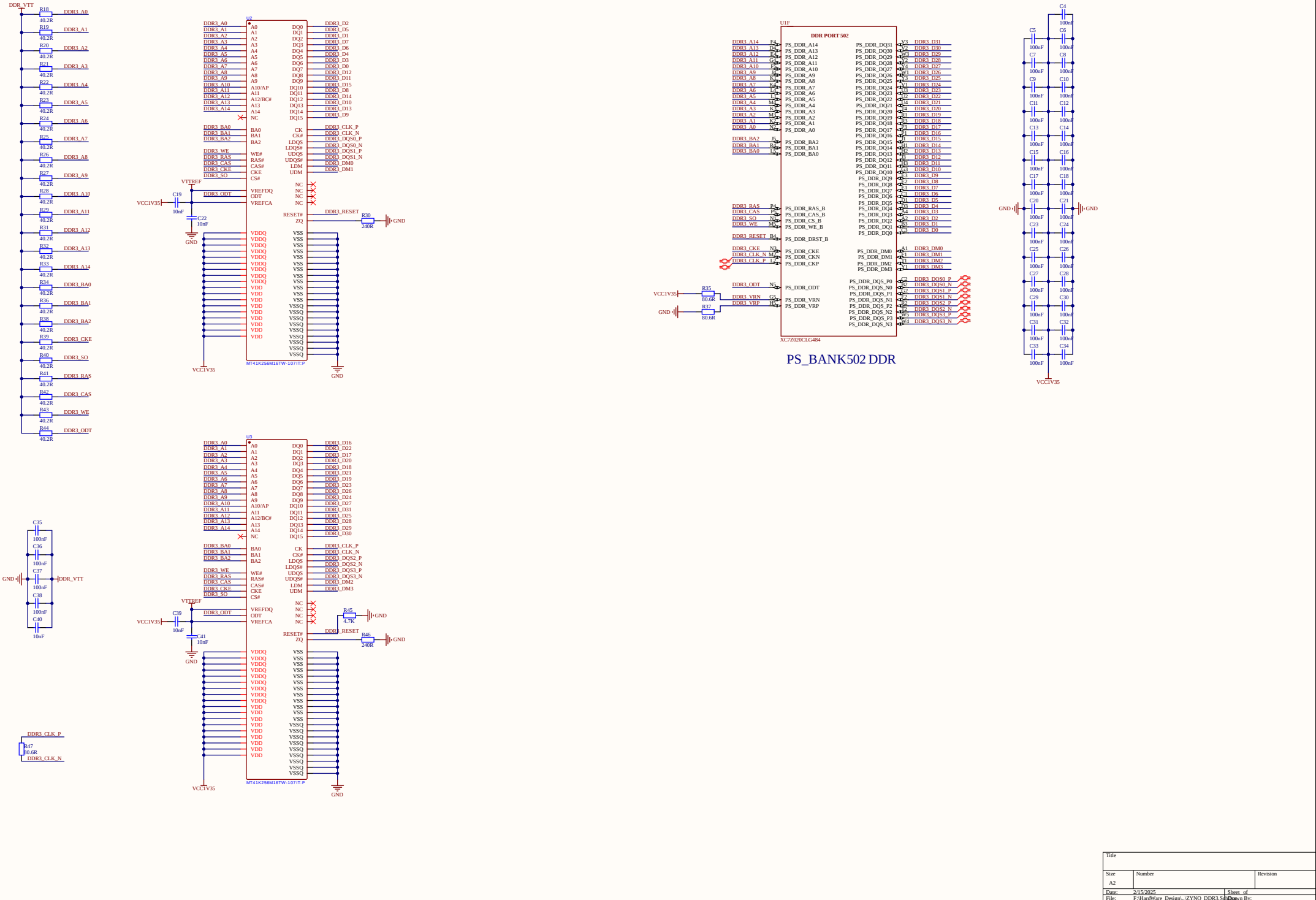
DDR_VTT
R18 40.2R DDR3_A0
R19 40.2R DDR3_A1
R20 40.2R DDR3_A2
R21 40.2R DDR3_A3
R22 40.2R DDR3_A4
R23 40.2R DDR3_A5
R24 40.2R DDR3_A6
R25 40.2R DDR3_A7
R26 40.2R DDR3_A8
R27 40.2R DDR3_A9
R28 40.2R DDR3_A10
R29 40.2R DDR3_A11
R31 40.2R DDR3_A12
R32 40.2R DDR3_A13
R33 40.2R DDR3_A14
R34 40.2R DDR3_BA0
R36 40.2R DDR3_BA1
R38 40.2R DDR3_BA2
R39 40.2R DDR3_CKE
R40 40.2R DDR3_SO
R41 40.2R DDR3_RAS
R42 40.2R DDR3_CAS
R43 40.2R DDR3_WE
R44 40.2R DDR3_ODT
U2
MT41K256M16TW-107IT:P
VTTREF
VCC1V35
C19 10nF
C22 10nF
GND
DDR3_RESET
R30 240R
U3
C35 100nF
C36 100nF
C37 100nF
C38 100nF
C40 10nF
C39 10nF
C41 10nF
R45 4.7K
R46 240R
DDR3_CLK_P
R47 80.6R
DDR3_CLK_N
U1F
DDR PORT 502
XC7Z020CLG484
R35 80.6R
R37 80.6R
PS_BANK502 DDR
C4 100nF
C5 100nF
C6 100nF
C7 100nF
C8 100nF
C9 100nF
C10 100nF
C11 100nF
C12 100nF
C13 100nF
C14 100nF
C15 100nF
C16 100nF
C17 100nF
C18 100nF
C20 100nF
C21 100nF
C23 100nF
C24 100nF
C25 100nF
C26 100nF
C27 100nF
C28 100nF
C29 100nF
C30 100nF
C31 100nF
C32 100nF
C33 100nF
C34 100nF
Title
Size A2
Number
Revision
Date: 2/15/2025
Sheet of
File: F:\HardWare_Design\...\ZYNQ_DDR3.SchDoc
Drawn By:

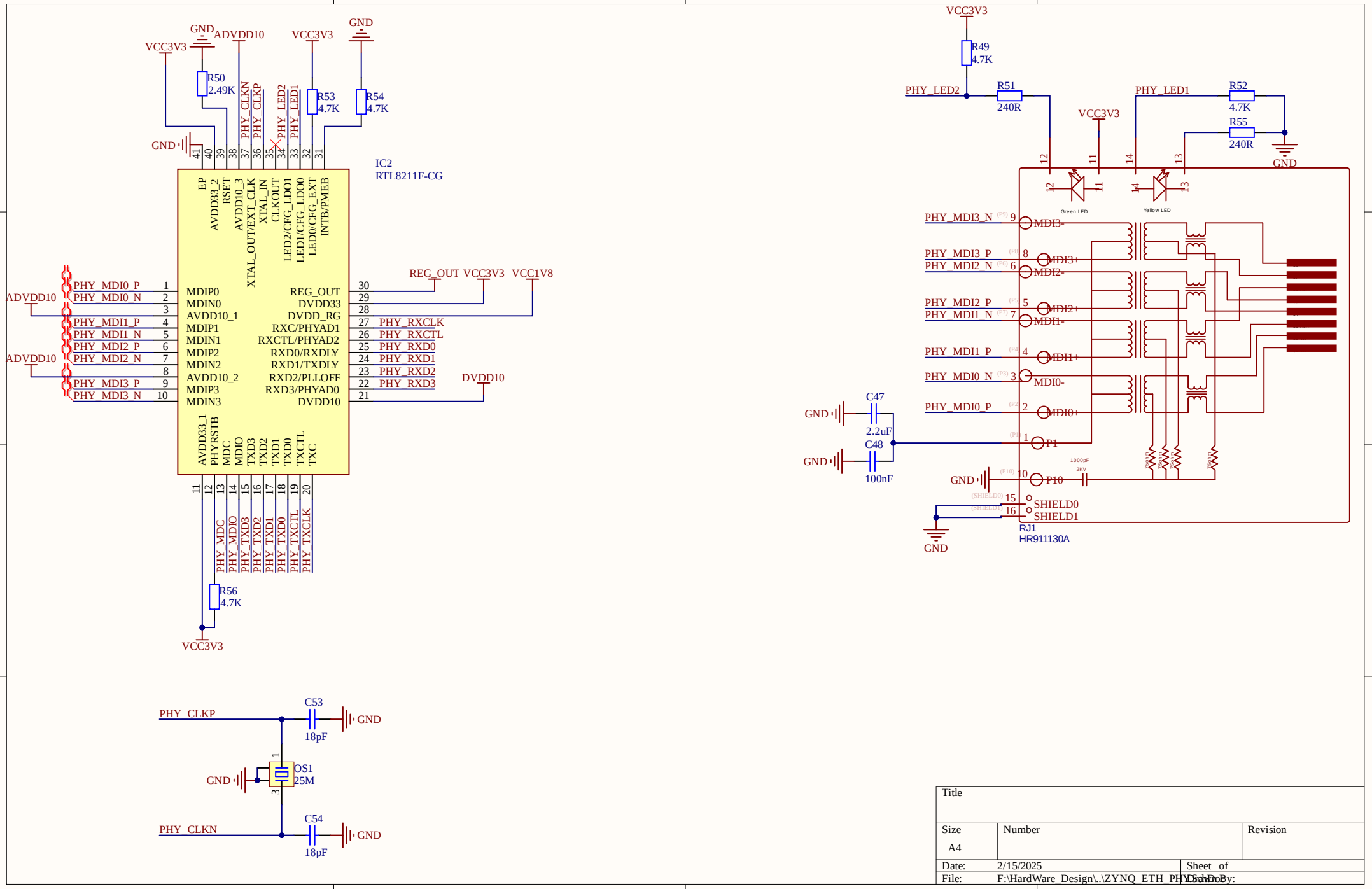

IC2
RTL8211F-CG
EP
AVDD33_2
RSET
AVDD10_3
XTAL_OUT/EXT_CLK
XTAL_IN
CLKOUT
LED2/CFG_LDO1
LED1/CFG_LDO0
LED0/CFG_EXT
INTB/PMEB
MDIP0
MDIN0
AVDD10_1
MDIP1
MDIN1
MDIP2
MDIN2
AVDD10_2
MDIP3
MDIN3
REG_OUT
DVDD33
DVDD_RG
RXC/PHYAD1
RXCTL/PHYAD2
RXD0/RXDLY
RXD1/TXDLY
RXD2/PLLOFF
RXD3/PHYAD0
DVDD10
AVDD33_1
PHYRSTB
MDC
MDIO
TXD3
TXD2
TXD1
TXD0
TXCTL
TXC
PHY_MDI0_P
PHY_MDI0_N
PHY_MDI1_P
PHY_MDI1_N
PHY_MDI2_P
PHY_MDI2_N
PHY_MDI3_P
PHY_MDI3_N
PHY_RXCLK
PHY_RXCTL
PHY_RXD0
PHY_RXD1
PHY_RXD2
PHY_RXD3
PHY_MDC
PHY_MDIO
PHY_TXD3
PHY_TXD2
PHY_TXD1
PHY_TXD0
PHY_TXCTL
PHY_TXCLK
R50 2.49K
R53 4.7K
R54 4.7K
R56 4.7K
R49 4.7K
R51 240R
R52 4.7K
R55 240R
C47 2.2uF
C48 100nF
C53 18pF
C54 18pF
OS1 25M
PHY_CLKP
PHY_CLKN
PHY_LED2
PHY_LED1
VCC3V3
GND
ADVDD10
REG_OUT
VCC1V8
DVDD10
Green LED
Yellow LED
MDI3-
MDI3+
MDI2-
MDI2+
MDI1-
MDI1+
MDI0-
MDI0+
P1
P10
1000pF 2KV
SHIELD0
SHIELD1
RJ1
HR911130A
Title
Size
A4
Number
Revision
Date: 2/15/2025
Sheet of
File: F:\HardWare_Design\..\ZYNQ_ETH_PHY.SchDoc
Drawn By:

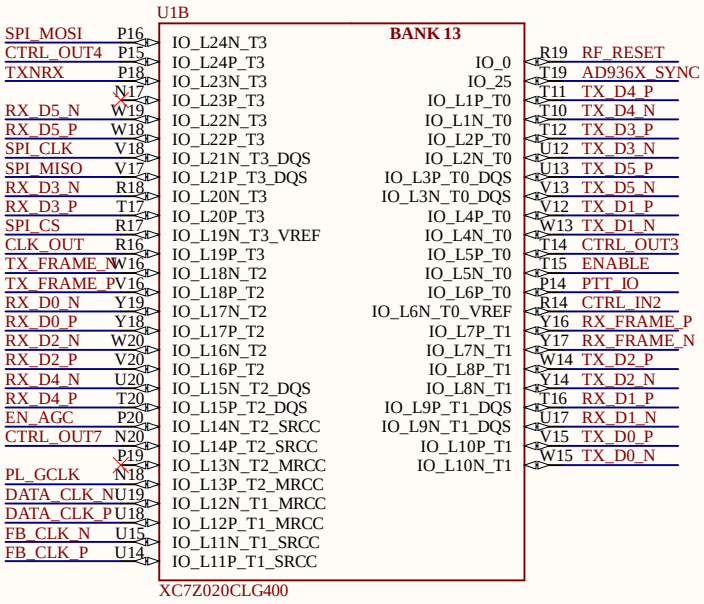

PL端BANK34

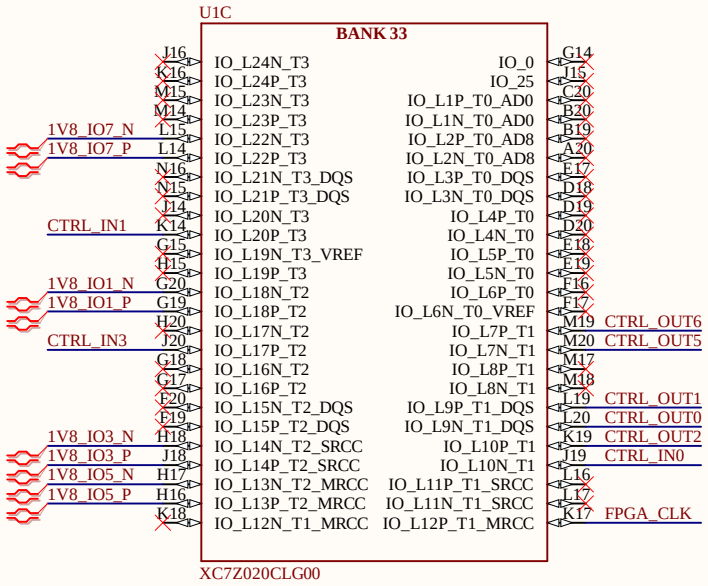

PL端BANK35

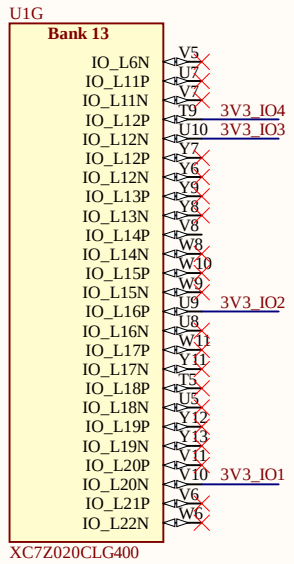

PL端BANK13

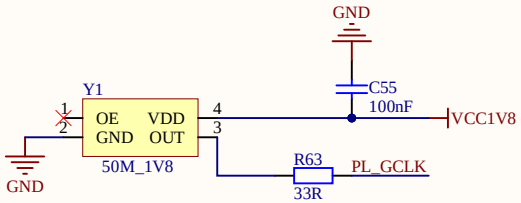

PL端时钟50M

Title		
Size A4	Number	Revision
Date: 2/15/2025	Sheet of	
File: F:\HardWare_Design\..\ZYNQ_PL_BANK.SchDoc	Drawn By:	

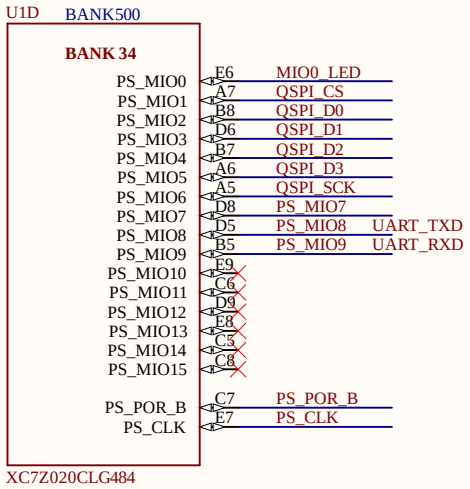

PS端BANK500

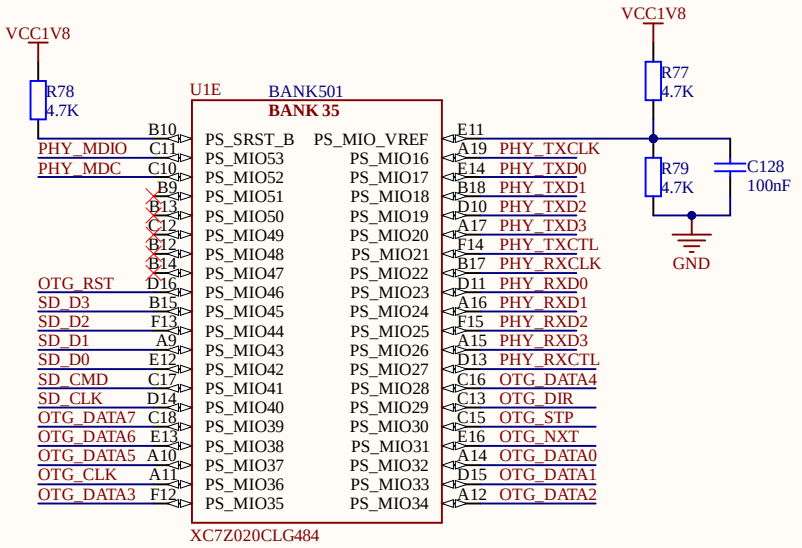

PS端BANK501

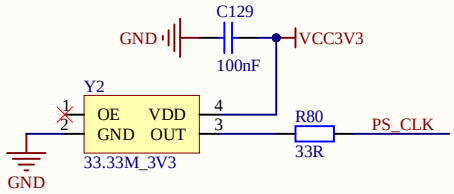

PS端时钟

Title		
Size A4	Number	Revision
Date: 2/15/2025	Sheet of	
File: F:\HardWare_Design\..\ZYNQ_PS_BANK.SchDoc	Drawn By:	

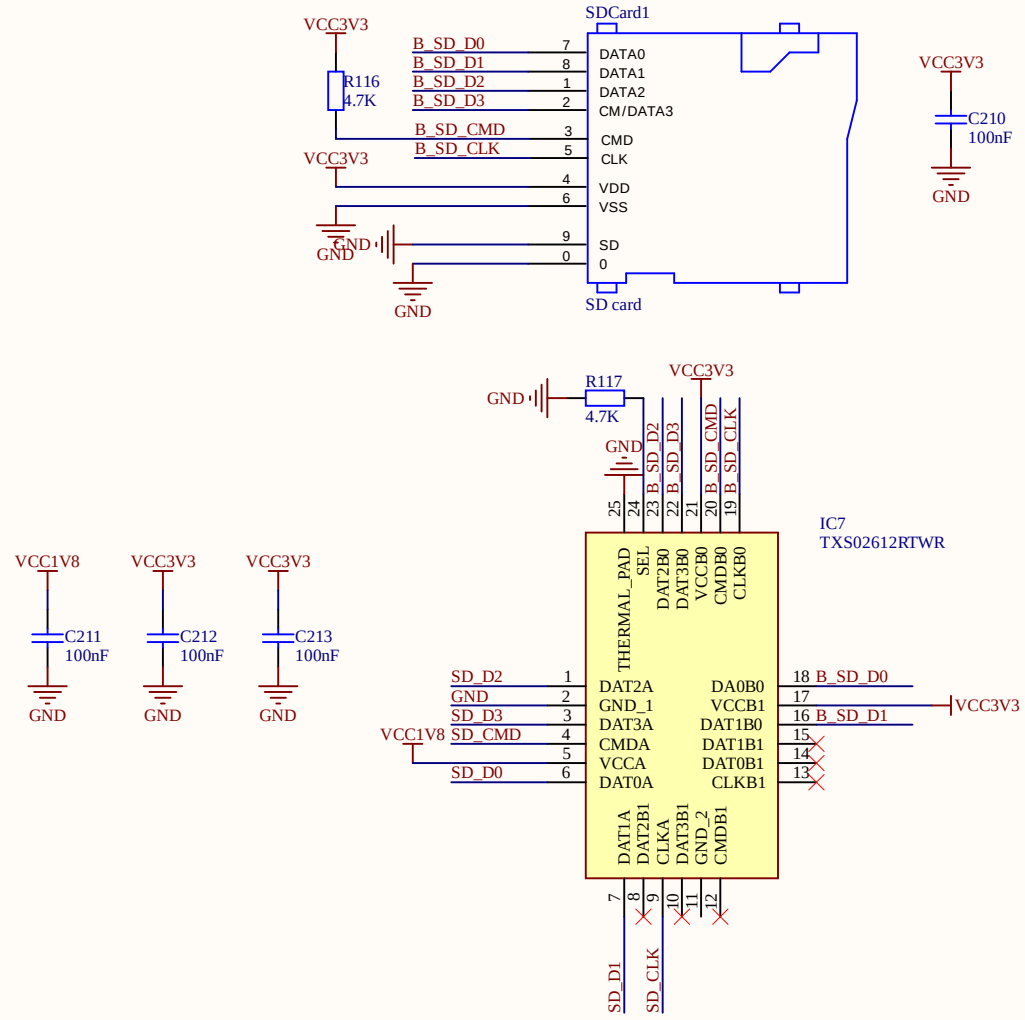

Title		
Size A4	Number	Revision
Date: 2/15/2025	Sheet of	
File: F:\HardWare_Design\..\ZYNQ_SD.SchDoc	Drawn By:	

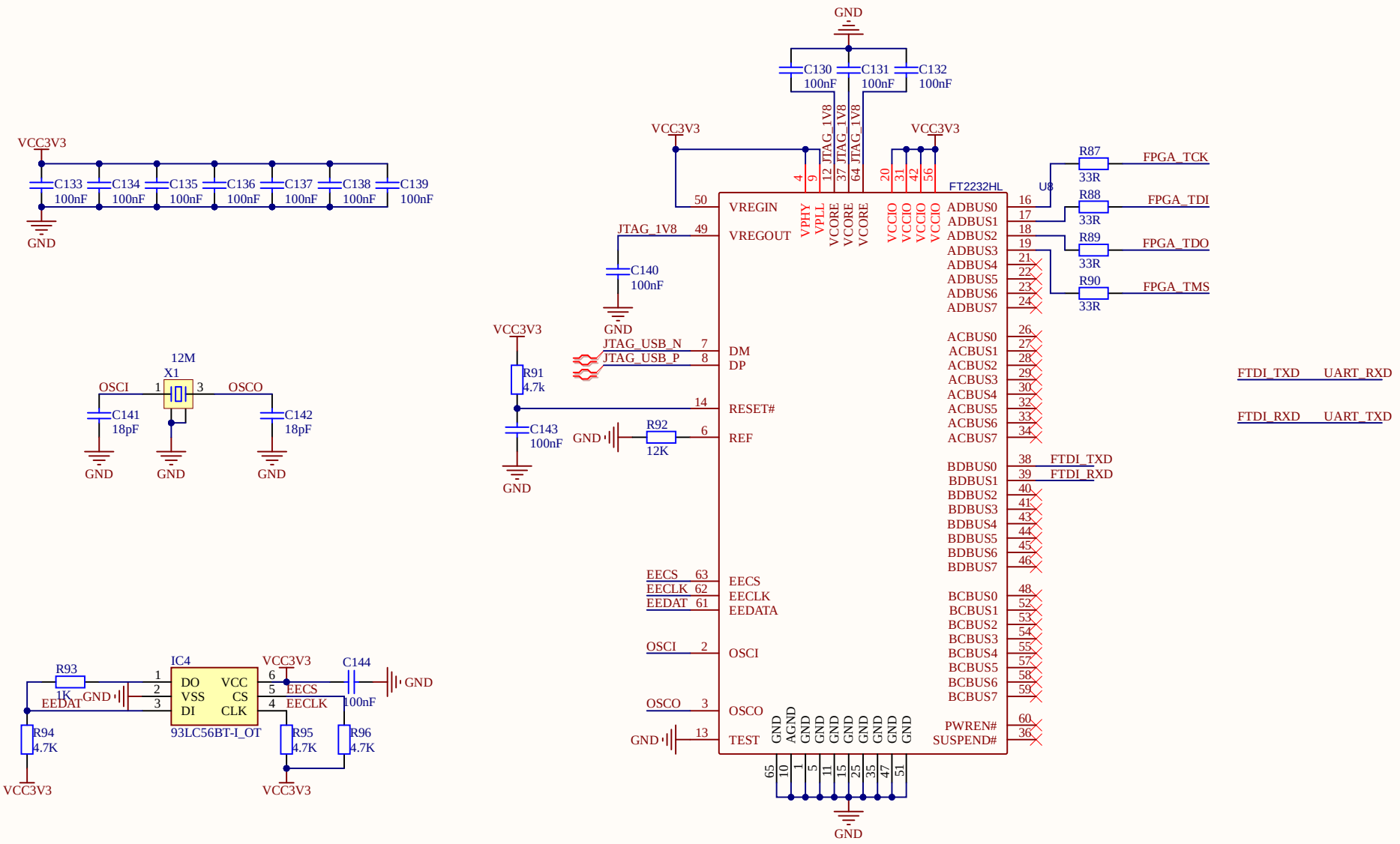

Title		
Size A4	Number	Revision
Date: 2/15/2025	Sheet of	
File: F:\HardWare_Design\..\ZYNQ_JTAG.SchDoc	Drawn By:	

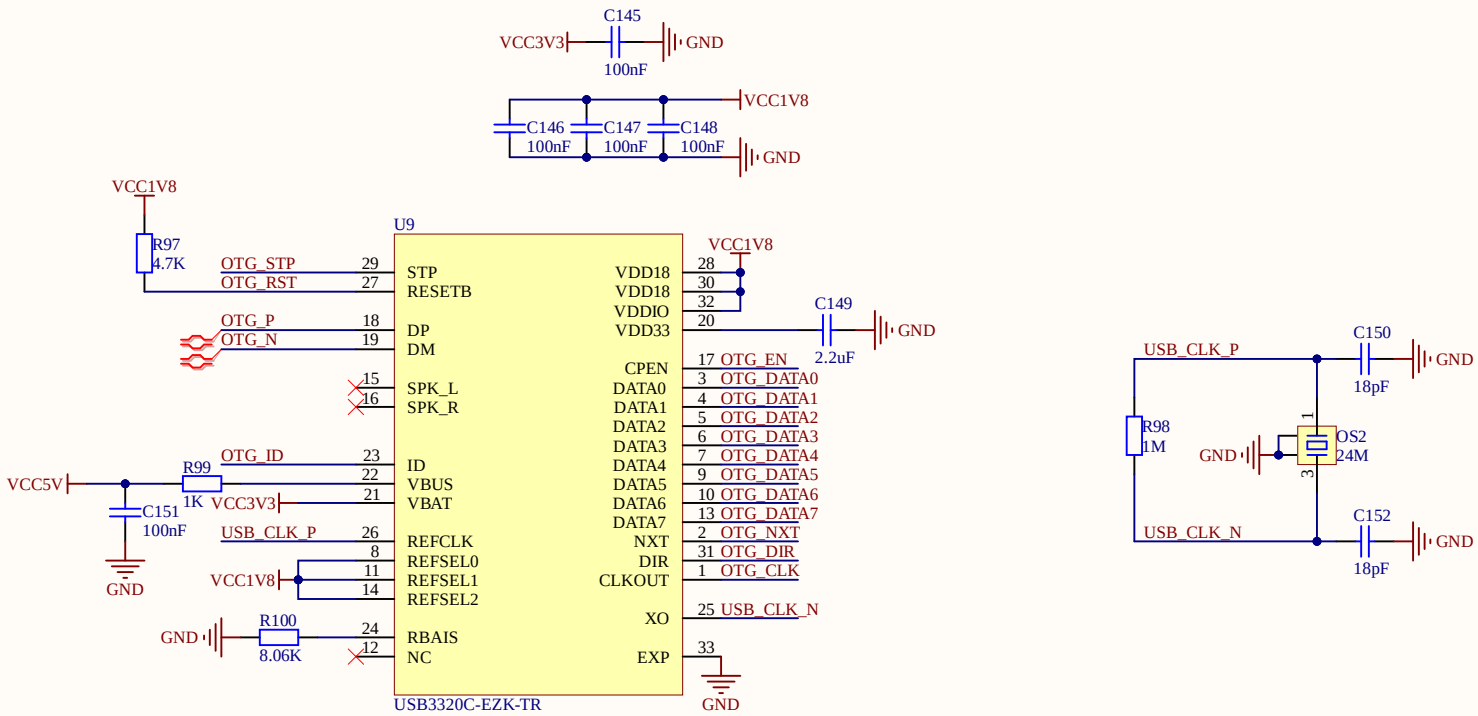

Title		
Size A4	Number	Revision
Date: 2/15/2025	Sheet of	
File: F:\HardWare_Design\..\ZYNQ_USB_PHY.SchDoc	Drawn By:	

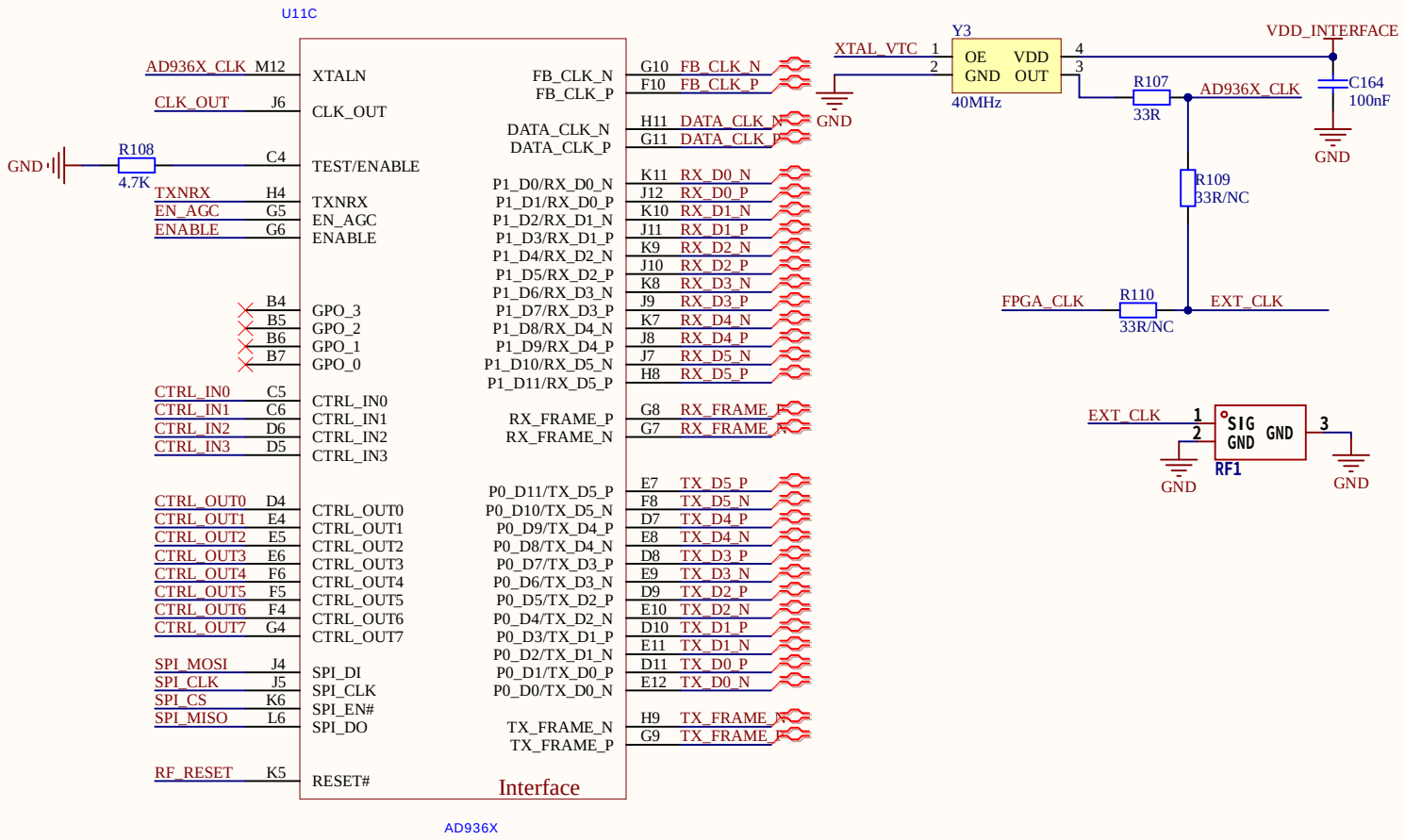

Title		
Size A4	Number	Revision
Date: 2/15/2025	Sheet of	
File: F:\HardWare_Design\..\AD936X_Digital.SchDoc	Drawn By:	

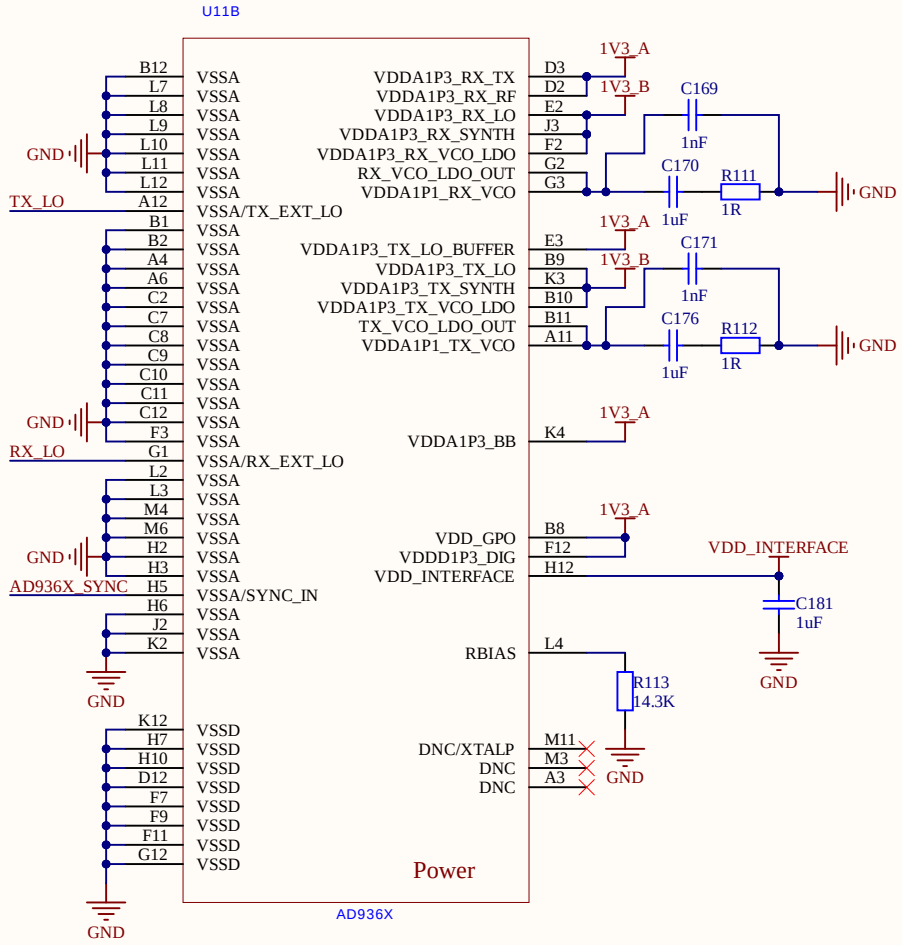

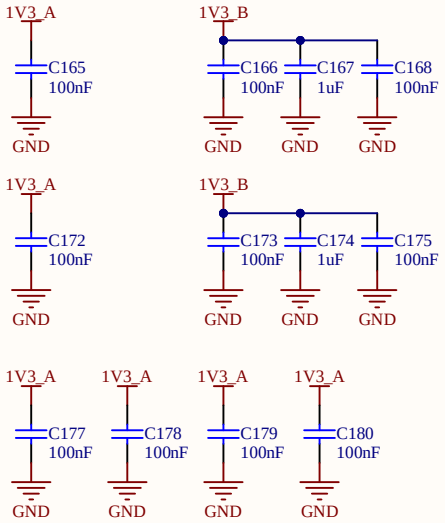

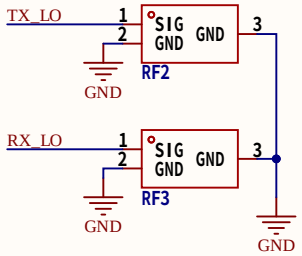

Title		
Size A4	Number	Revision
Date: 2/15/2025		Sheet of
File: F:\HardWare_Design\..\AD936X_Power.SchDoc		Drawn By:

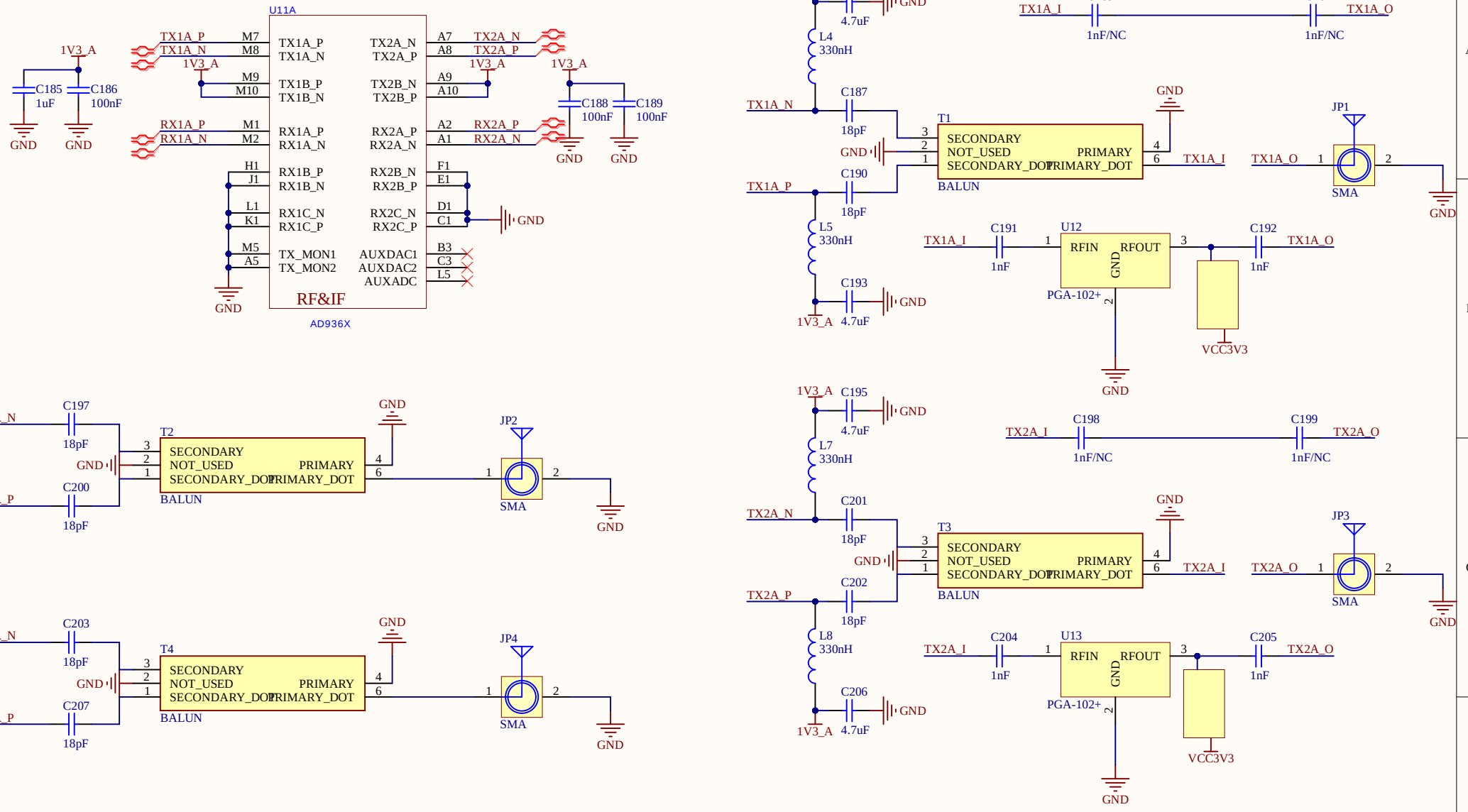

Title		
Size A4	Number	Revision
Date: 2/15/2025		Sheet of
File: F:\HardWare_Design\..\AD936X_RF.SchDoc		Drawn By:

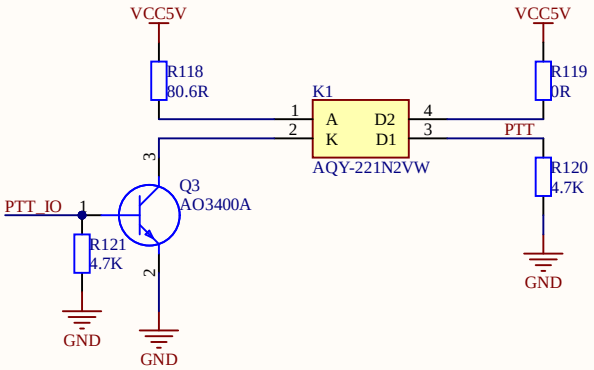

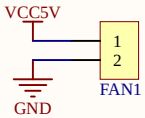

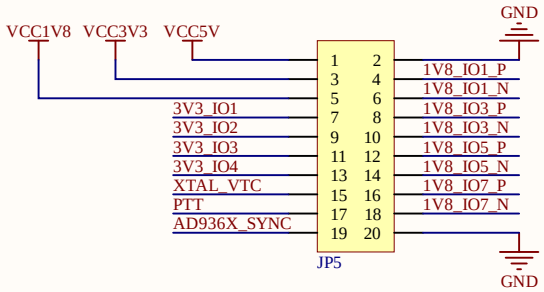

Title		
Size: A4	Number	Revision
Date: 2/15/2025		Sheet of
File: F:\HardWare_Design\..\EXT_IO.SchDoc		Drawn By: